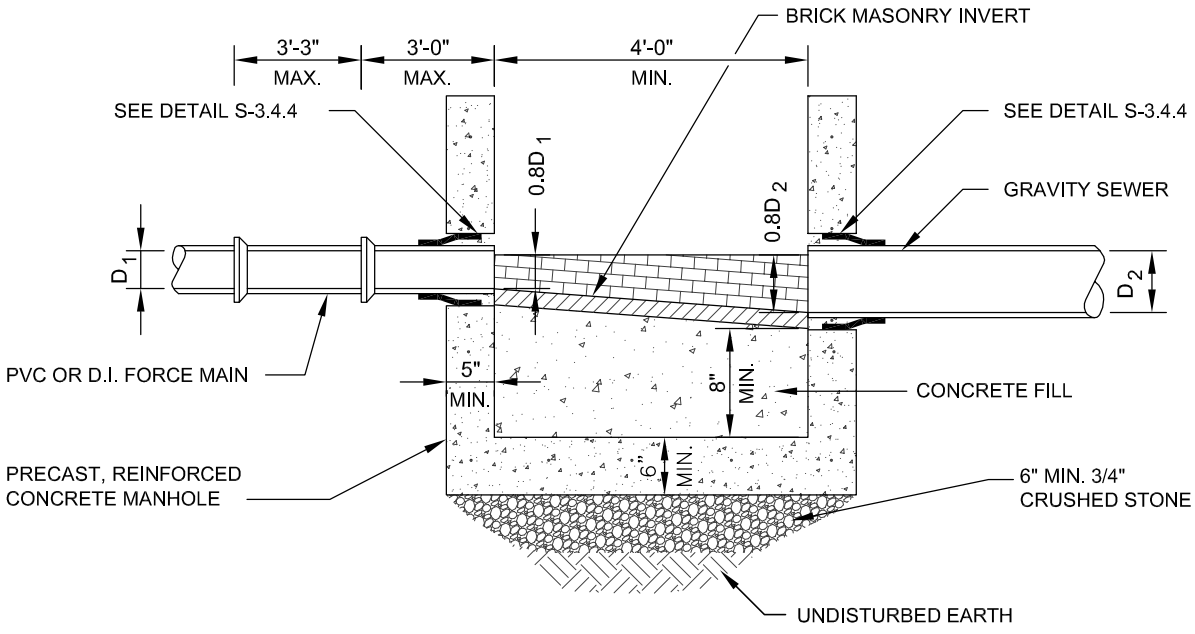

NOT TO SCALE

TOWN OF FRAMINGHAM DEPARTMENT OF PUBLIC WORKS	FORCEMAIN MANHOLE	DATE: SEPT. 2008 REV: 0	DETAIL NO. S-3.4.2