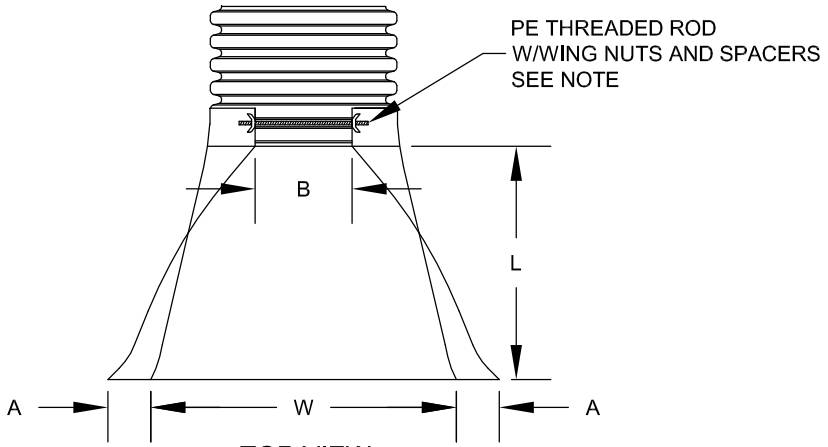

TOP VIEW

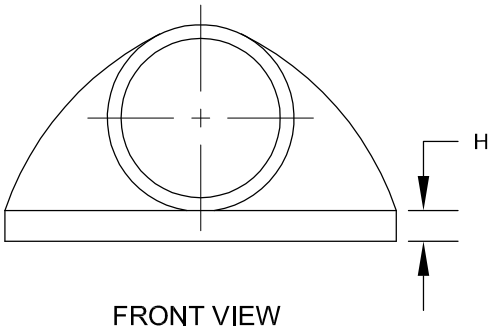

FRONT VIEW

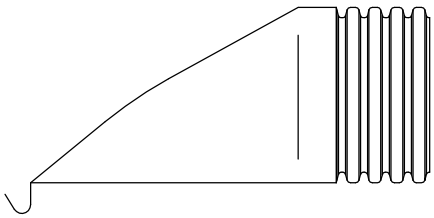

RIGHT SIDE VIEW

PIPE SIZE	A	B (MAX)	H	L	W
12 IN	6.50 IN	10.00 IN	6.50 IN	25.00 IN	29.00 IN
15 IN	6.5O IN	10.00 IN	6.50 IN	25.00 IN	29.00 IN
18 IN	7.50 IN	15.00 IN	6.50 IN	32.00 IN	35.00 IN
24 IN	7.50 IN	18.00 IN	6.50 IN	36.00 IN	45.00 IN
30 IN	7.50 IN	12.00 IN	8.60 IN	58.00 IN	63.00 IN
36 IN	7.50 IN	25.00 IN	8.60 IN	58.00 IN	63.00 IN

NOTES:

1. PE THREADED ROD W/WING NUTS PROVIDED FOR END SECTIONS 12"-24". 30" & 36" END SECTIONS REQUIRE TWO (2) THREADED RODS FOR ASSEMBLY.
2. ALL DIMENSIONS ARE NOMINAL.

NOT TO SCALE

TOWN OF FRAMINGHAM DEPARTMENT OF PUBLIC WORKS	FLARED HDPE END SECTIONS	DATE: SEPT. 2008 REV: 0	DETAIL NO. D-4.6.0