TOWN OF FRAMINGHAM
DEPARTMENT OF PUBLIC WORKS

RAISING CASTINGS

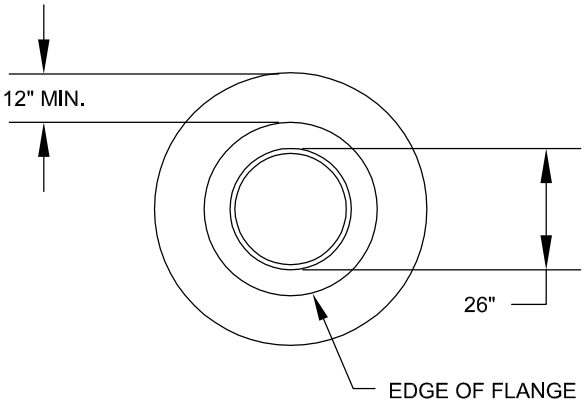

PLAN

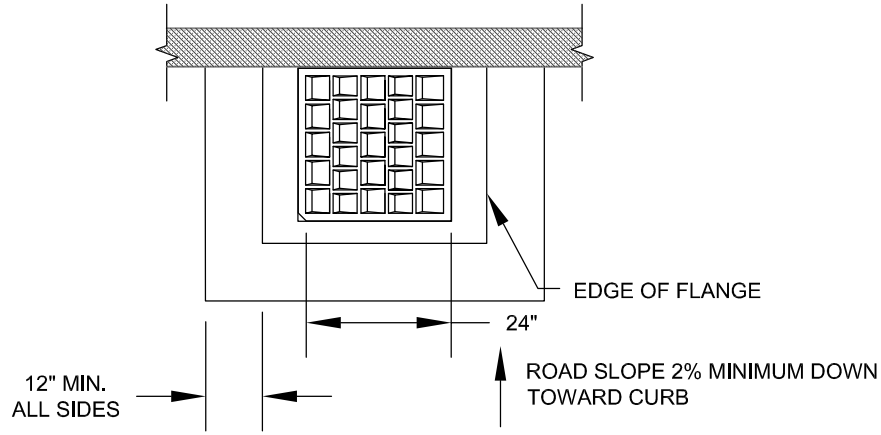

PLAN

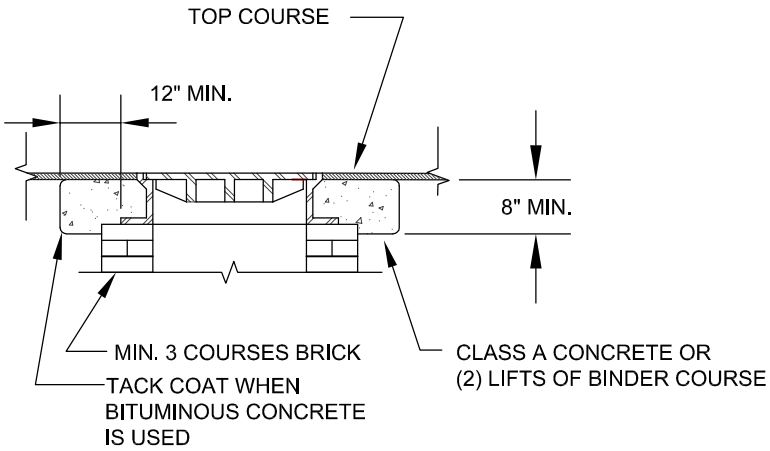

SECTION
MANHOLES

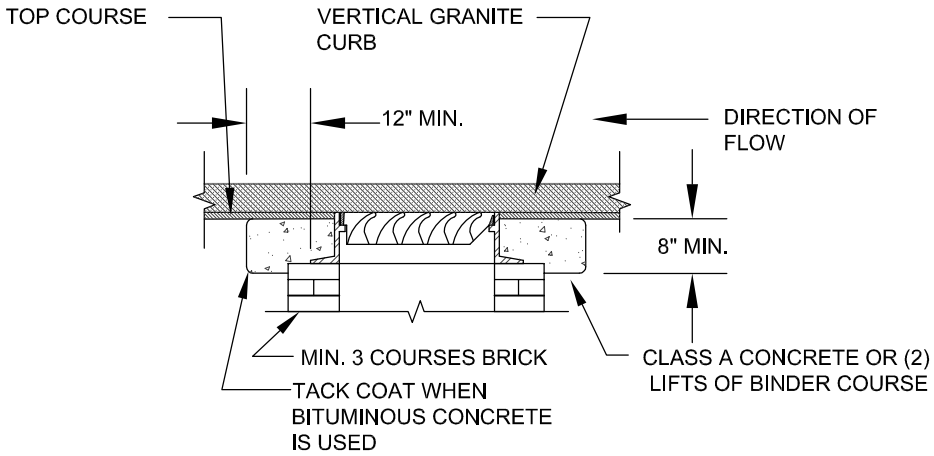

SECTION
CATCH BASINS

NOT TO SCALE

DATE:
FEB. 2010
REV:
1

DETAIL NO.
D-4.3.1