TOWN OF FRAMINGHAM
DEPARTMENT OF PUBLIC WORKS

DUAL GRATE CATCH BASIN

DATE: SEPT. 2008
REV: 0

DETAIL NO. D-4.1.2

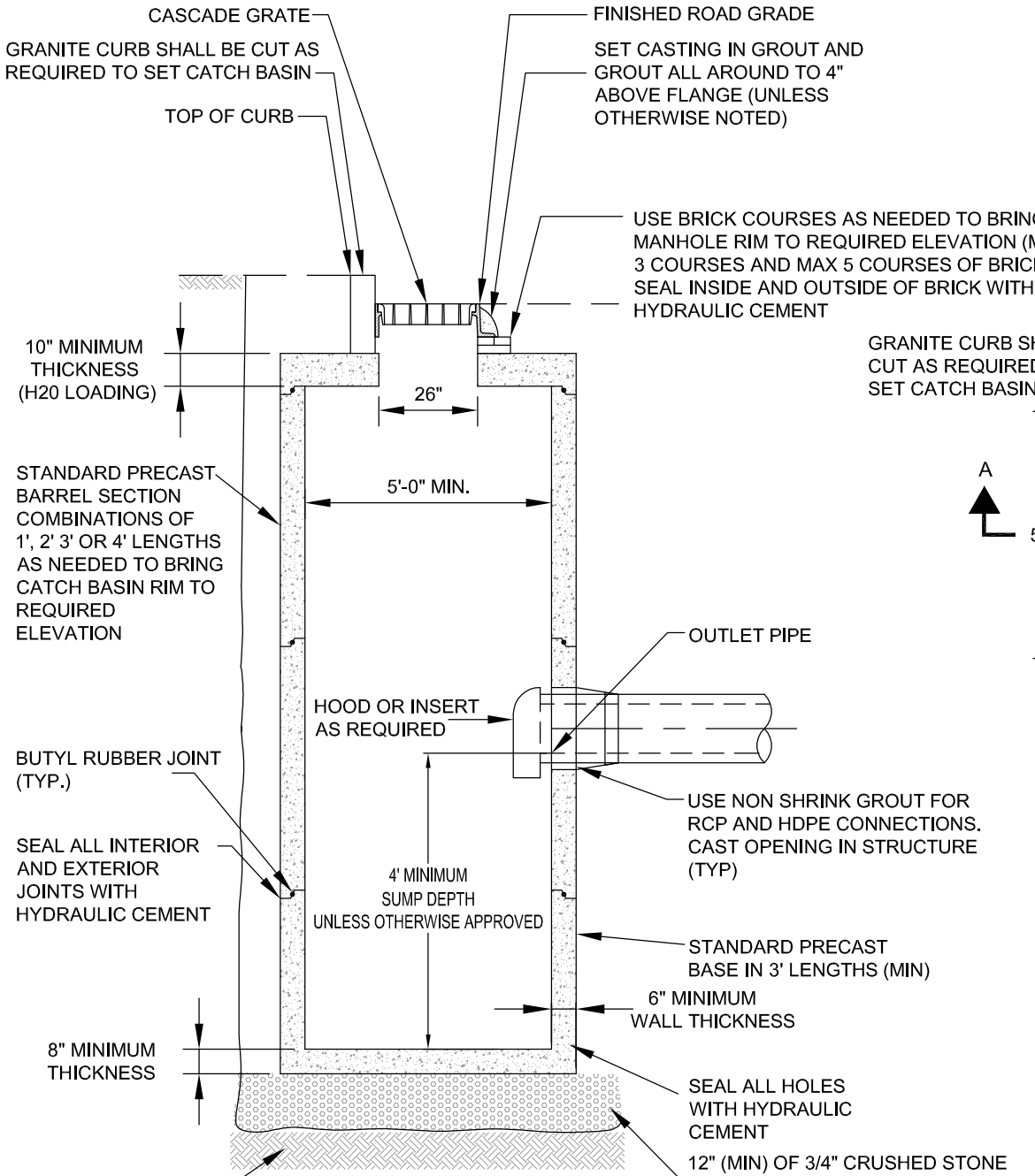

SECTION A-A

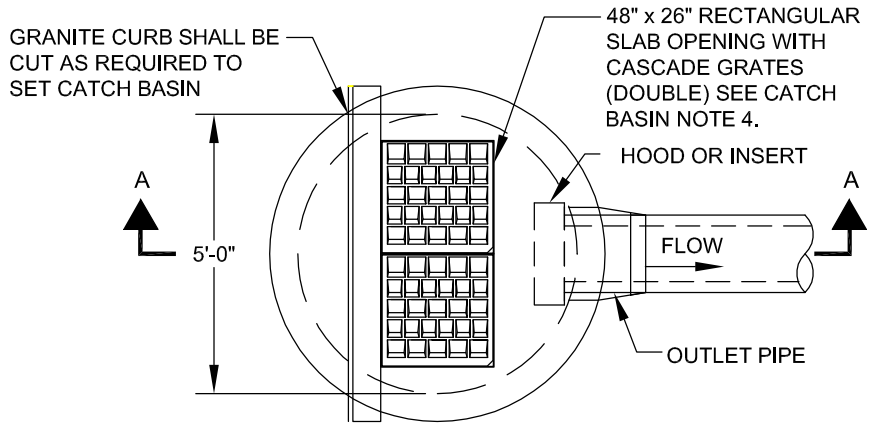

PLAN

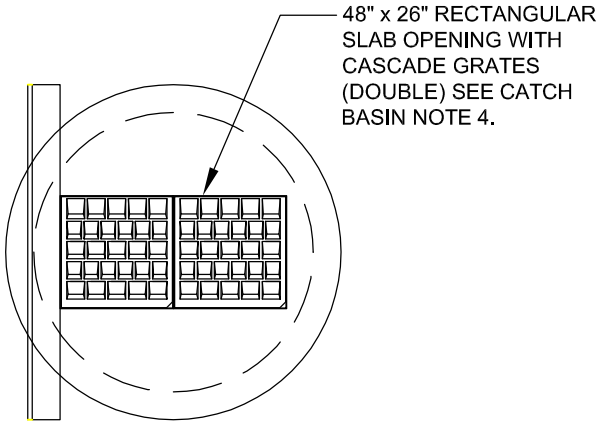

OPTIONAL PLAN

NOT TO SCALE