TOWN OF FRAMINGHAM
DEPARTMENT OF PUBLIC WORKS

SINGLE GRATE CATCH BASIN

DATE: MARCH 2012
REV: 3

DETAIL NO. D-4.1.0

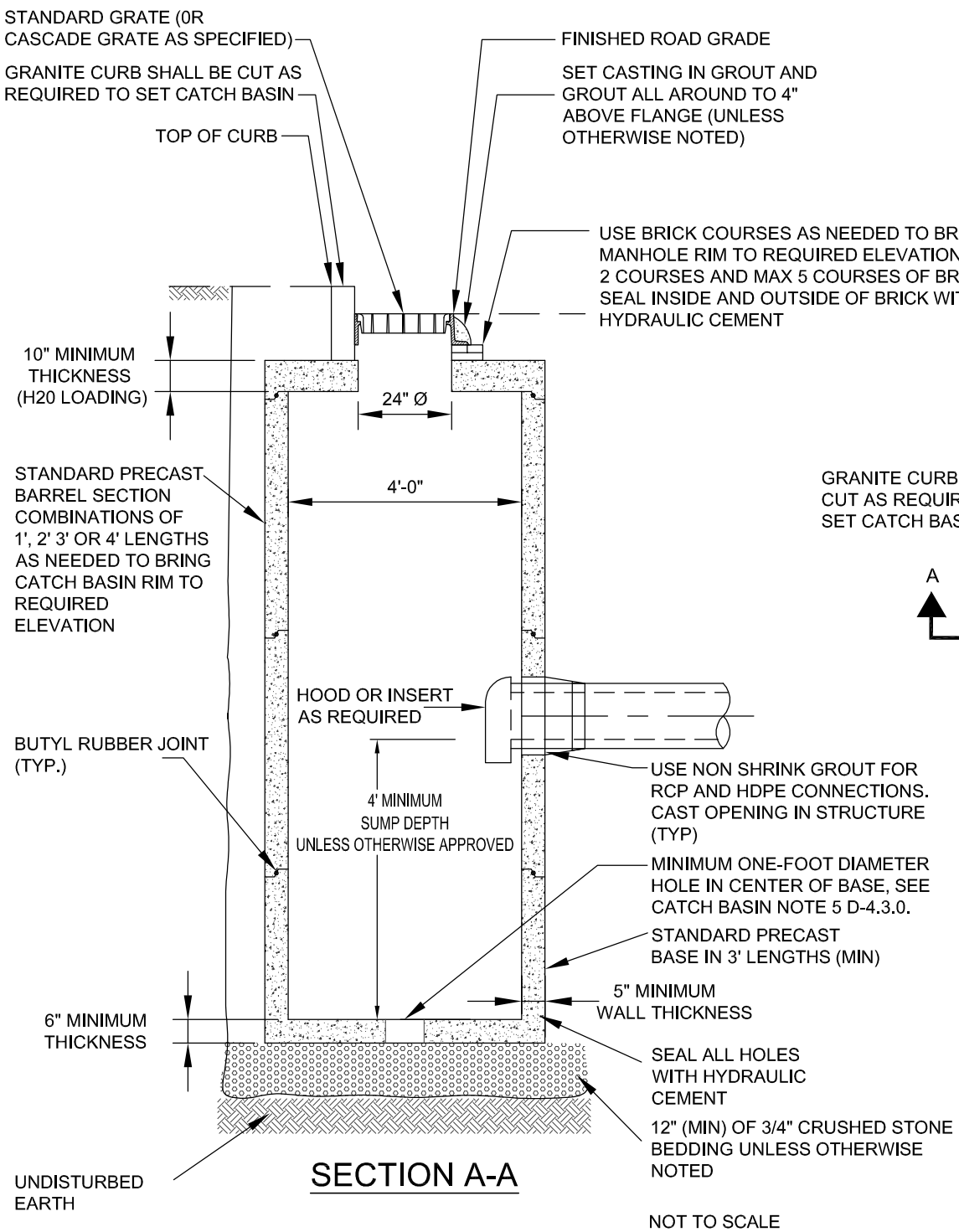

SECTION A-A

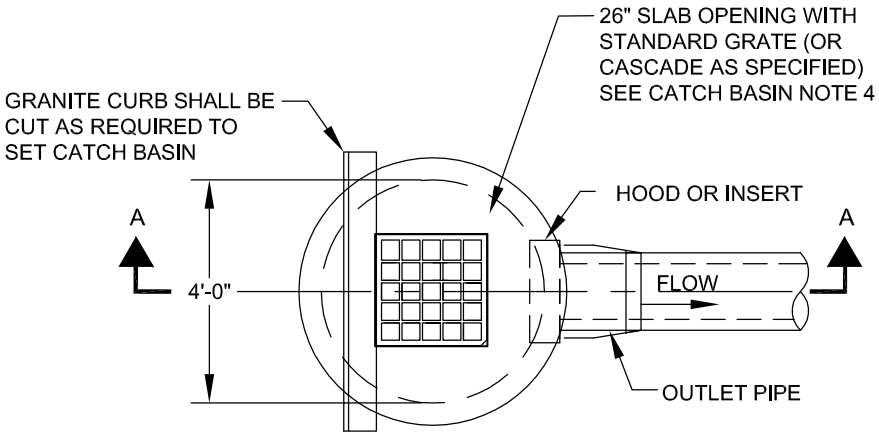

PLAN

NOT TO SCALE

TOWN OF FRAMINGHAM
DEPARTMENT OF PUBLIC WORKS

DIRECT INLET CATCH BASIN

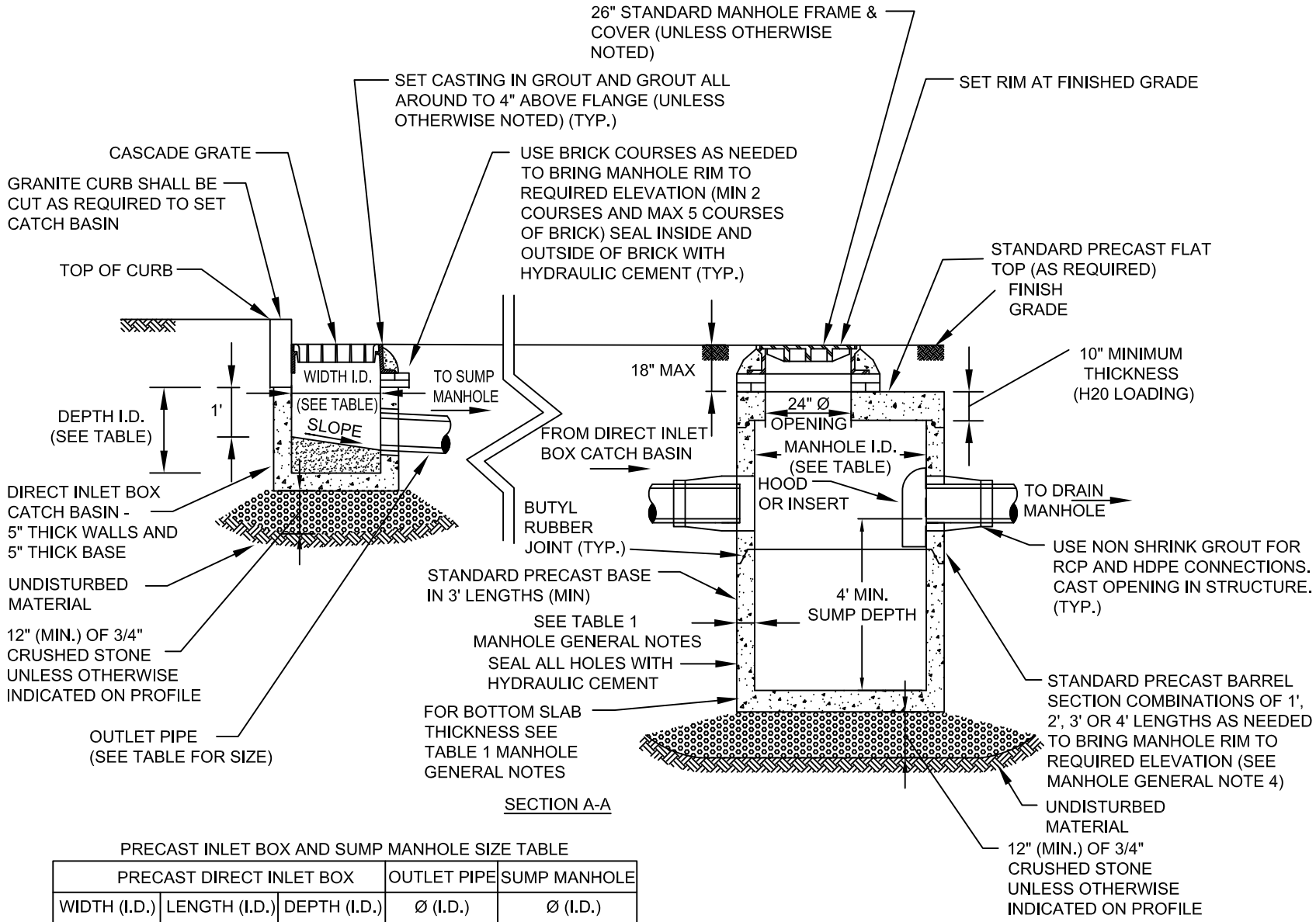

PRECAST INLET BOX AND SUMP MANHOLE SIZE TABLE

	PRECAST DIRECT INLET BOX			OUTLET PIPE	SUMP MANHOLE
	WIDTH (I.D.)	LENGTH (I.D.)	DEPTH (I.D.)	Ø (I.D.)	Ø (I.D.)
SINGLE GRATE	24"	24"	24"	12"	4'
DOUBLE GRATE	24"	48"	36"	15"	5'

I.D. = INSIDE DIMENSION

NOT TO SCALE

DATE: MARCH 2015
REV: 4

DETAIL NO. D-4.1.1

TOWN OF FRAMINGHAM
DEPARTMENT OF PUBLIC WORKS

DUAL GRATE CATCH BASIN

DATE: MARCH 2012
REV: 3

DETAIL NO. D-4.1.2

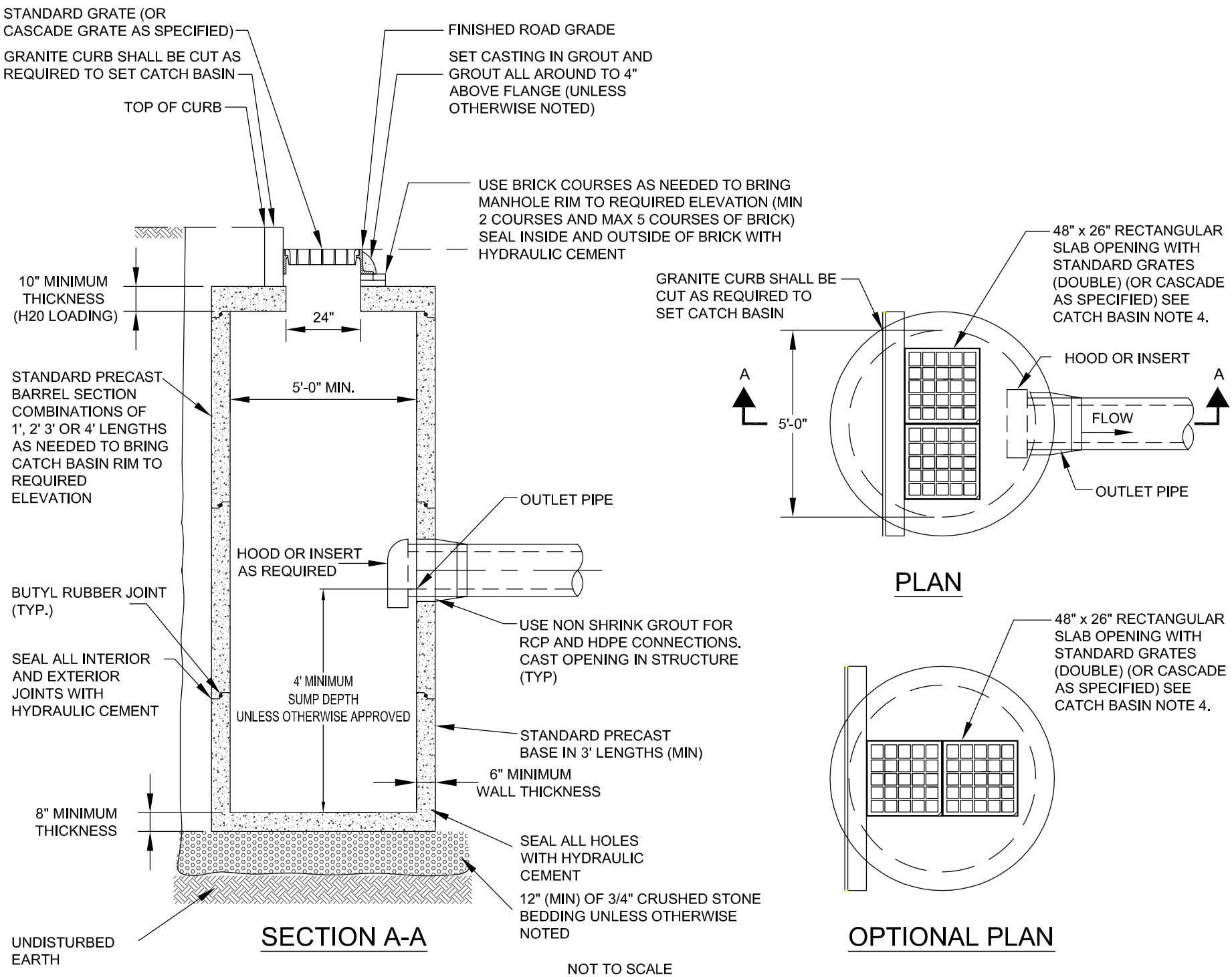

TOWN OF FRAMINGHAM
DEPARTMENT OF PUBLIC WORKS

TYPICAL DRAIN MANHOLE

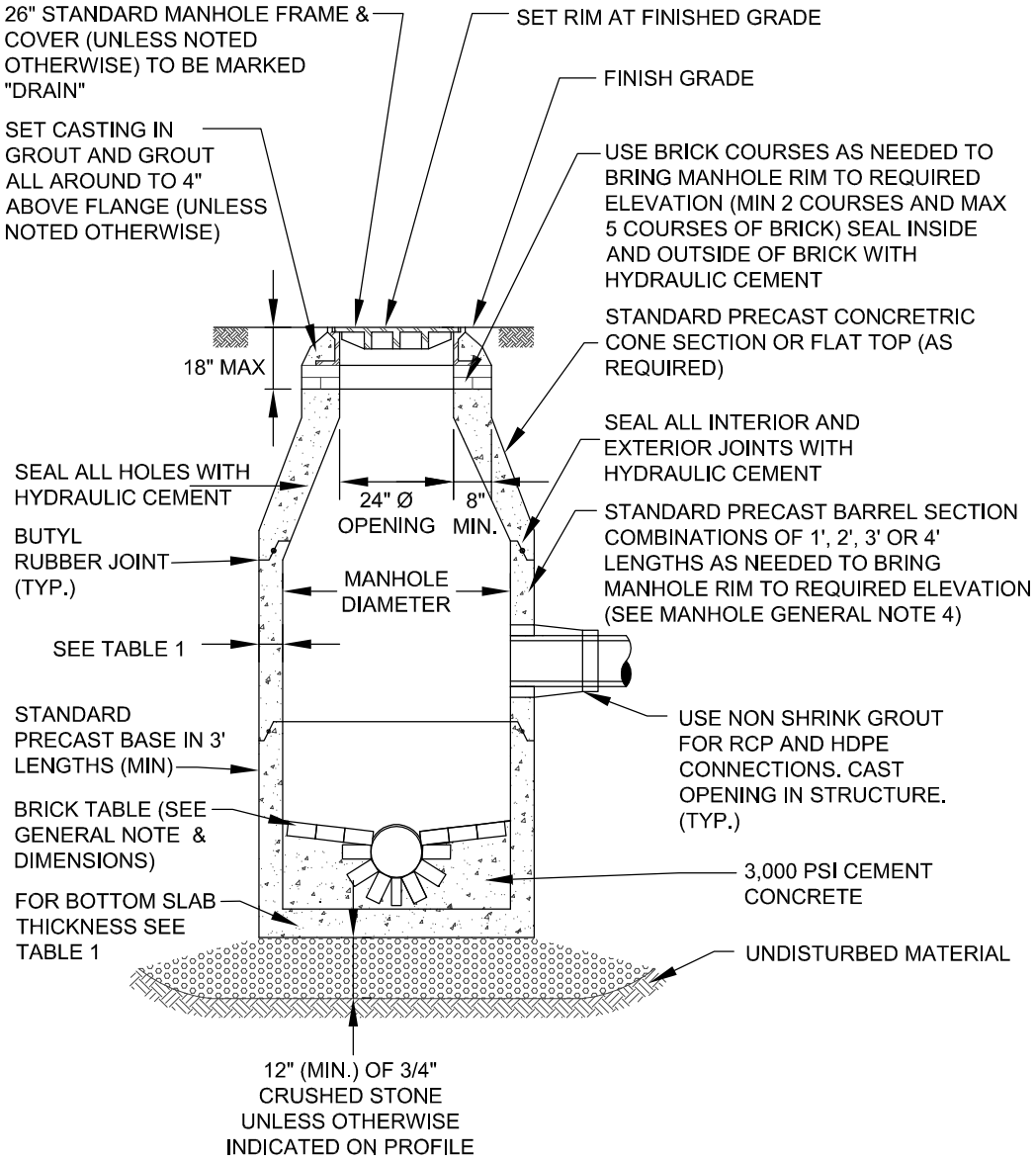

SECTION A-A

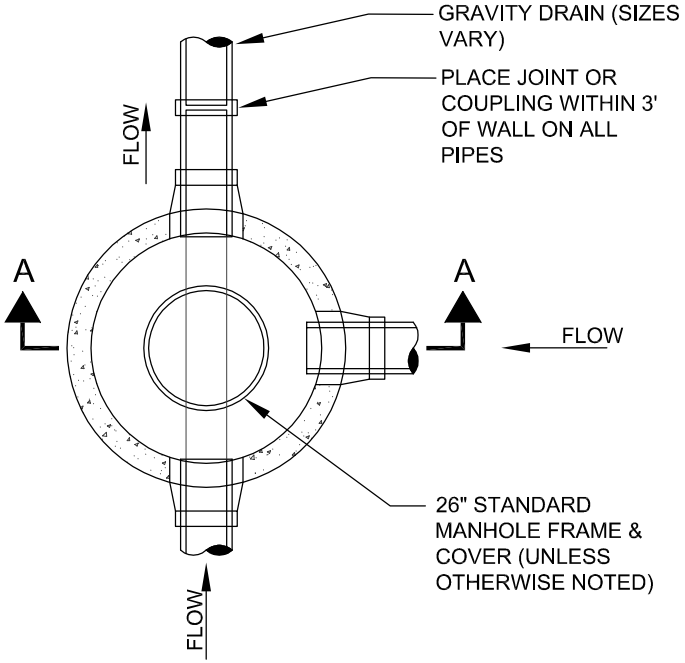

PLAN

NOT TO SCALE

DATE: MARCH 2012
REV: 3

DETAIL NO. D-4.2.0

TOWN OF FRAMINGHAM
DEPARTMENT OF PUBLIC WORKS

ECCENTRIC MANHOLE

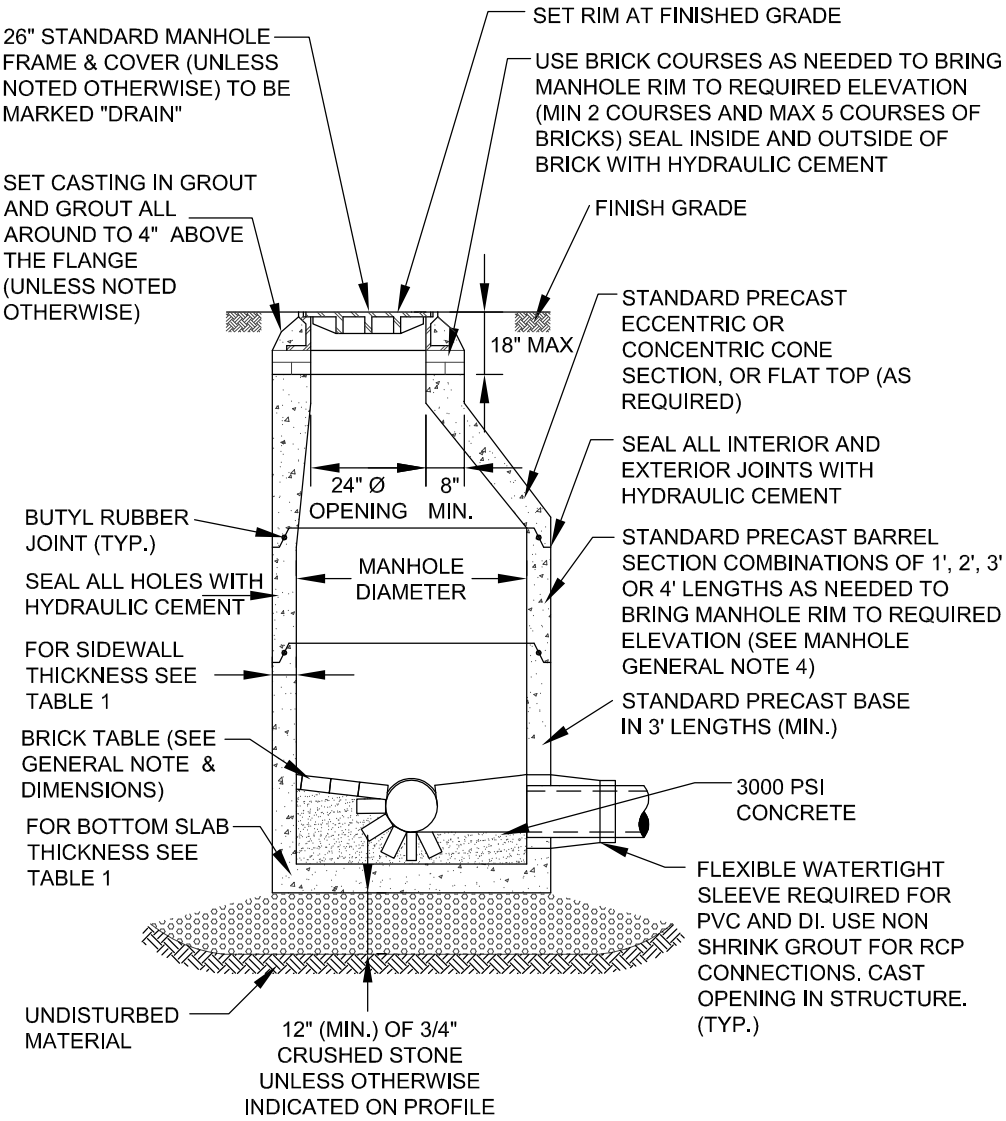

SECTION A-A

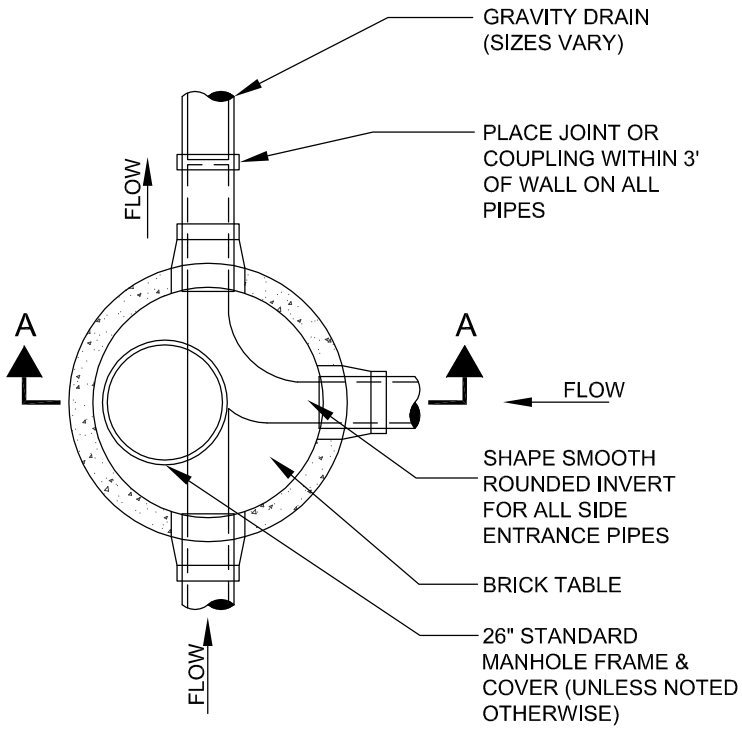

PLAN

NOT TO SCALE

DATE: MAR. 2012
REV: 2

DETAIL NO. D-4.2.1

TOWN OF FRAMINGHAM
DEPARTMENT OF PUBLIC WORKS

SUMP MANHOLE

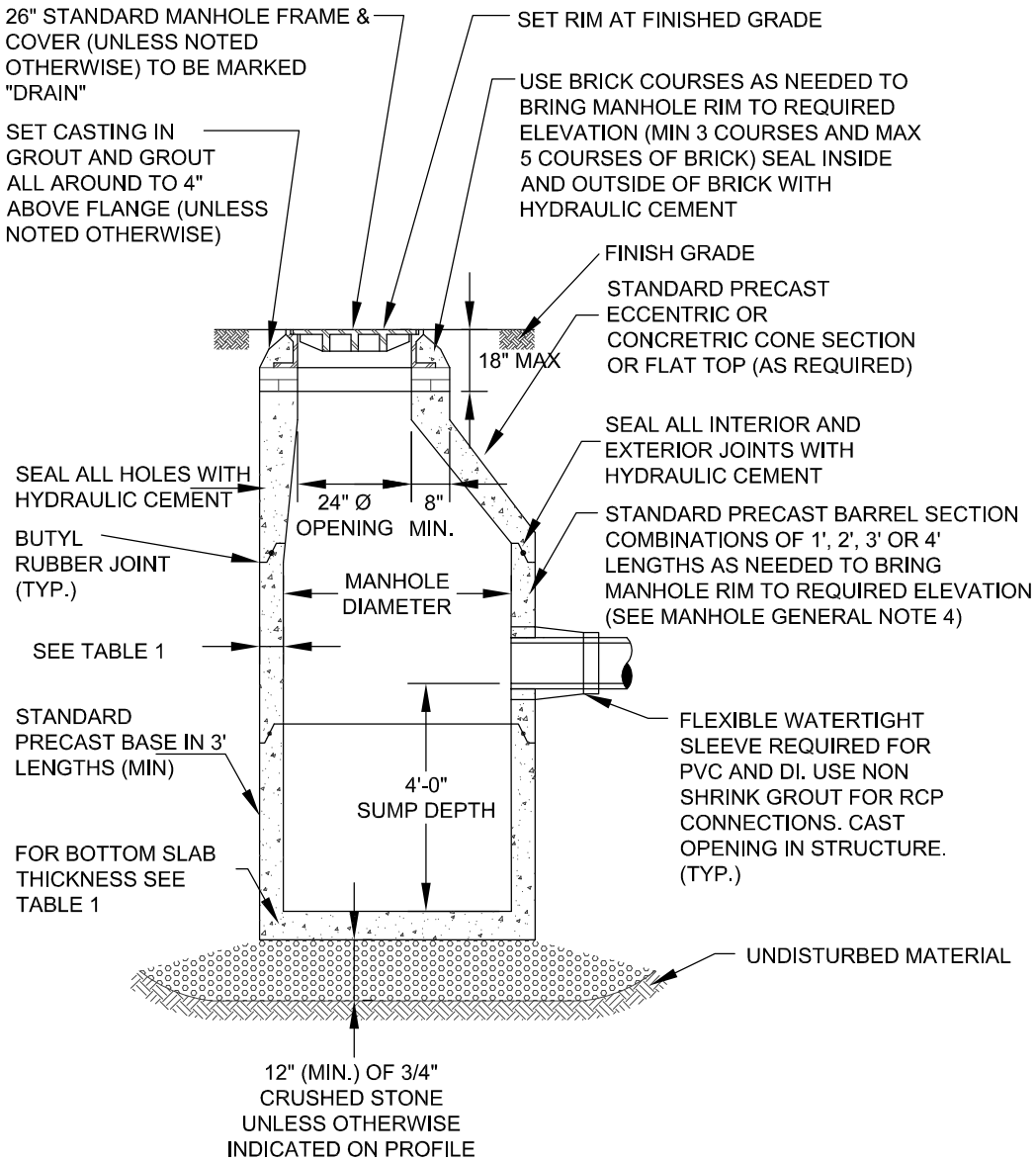

SECTION A-A

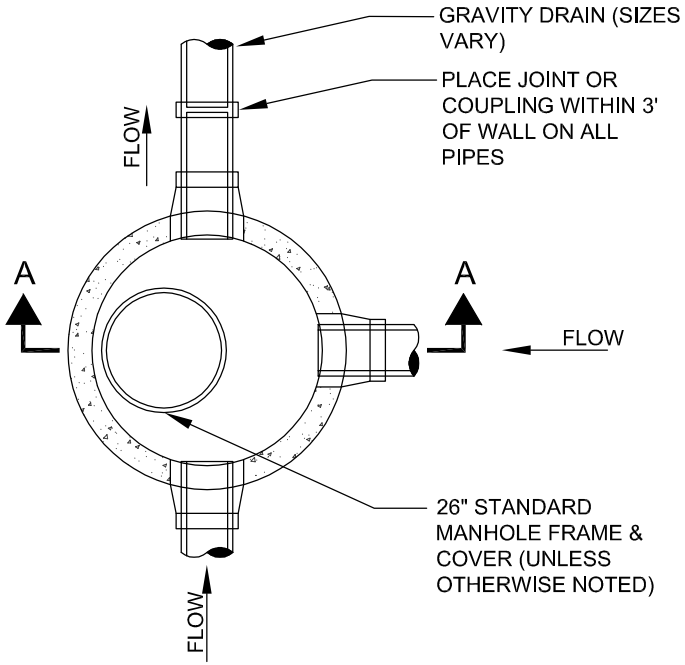

PLAN

NOT TO SCALE

DATE: FEB. 2010
REV: 1

DETAIL NO. D-4.2.2

TRENCH PAY LIMIT TABLE FOR MANHOLES AND CATCH BASINS

WALL THICKNESS	MAX TRENCH WIDTH
LESS THAN 6"	I.D. + 5'-0"
6" TO 12"	I.D. + 6'-0"
13" TO 18"	I.D. + 7'-0"
19" & GREATER	O.D. + 6'-0"

I.D. = INSIDE DIMENSION
O.D. = OUTSIDE DIMENSION

FOR TRENCHES GREATER THAN 5' DEEP ADD 3' FOR TEMPORARY SUPPORT OF EXCAVATION

GENERAL CATCH BASIN NOTES:

1. FACE OF PIPE SHALL NOT PROJECT MORE THAN 4-INCHES FROM FACE OF WALL ALONG CENTERLINE OF PIPE.
2. DESIGN PRECAST SECTIONS WITH FRAME AND GRATE FOR AASHTO H20 LOADING UNLESS OTHERWISE NOTED.
3. PRECAST TOP SLAB OPENING CAN BE CENTERED OR OFFSET AS NECESSARY.
4. GRATE VANES SHALL BE INSTALLED IN DIRECTION TO RECEIVE FLOWS.
5. CATCH BASIN BASE SHALL BE SOLID (NO HOLE IN CENTER) IF THE SEASONAL HIGH GROUNDWATER TABLE IS LESS THAN 2 FEET BELOW THE BASE.

TABLE 1

MANHOLE DIAMETER	SIDE WALL MIN. THICKNESS	BOTTOM SLAB MIN. THICKNESS	MAX PIPE DIAMETER * RCP	DI/PVC
4'	5"	6"	24"	30"
5'	6"	8"	36"	42"
6'	6"	8"	48"	54"
8'	8"	8"	66"	72"
10'	10"	10"	72"	84"

* MAY VARY DEPENDING ON SIZE AND LOCATION OF ADDITIONAL PENETRATIONS OR RELATIONSHIP OF PENETRATIONS IN MANHOLE

MANHOLE GENERAL NOTES:

1. DRAIN MANHOLE DIAMETER SHALL BE 4', 5', 6', 8' OR 10' AS SHOWN ON PLAN/PROFILE VIEWS.
2. DESIGN PRECAST SECTIONS WITH FRAME AND COVER FOR AASHTO H20 LOADINGS UNLESS OTHERWISE NOTED.
3. MANHOLES LARGER THAN 4' IN DIAMETER AT THE BASE SHALL BE REDUCED IN DIAMETER TO 4' AT THE NEXT RISER SECTION UNLESS NOTED OTHERWISE ON PLANS.

TOWN OF FRAMINGHAM
DEPARTMENT OF PUBLIC WORKS

RAISING CASTINGS

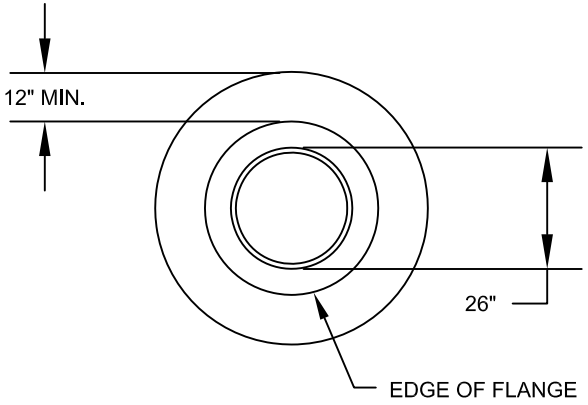

PLAN

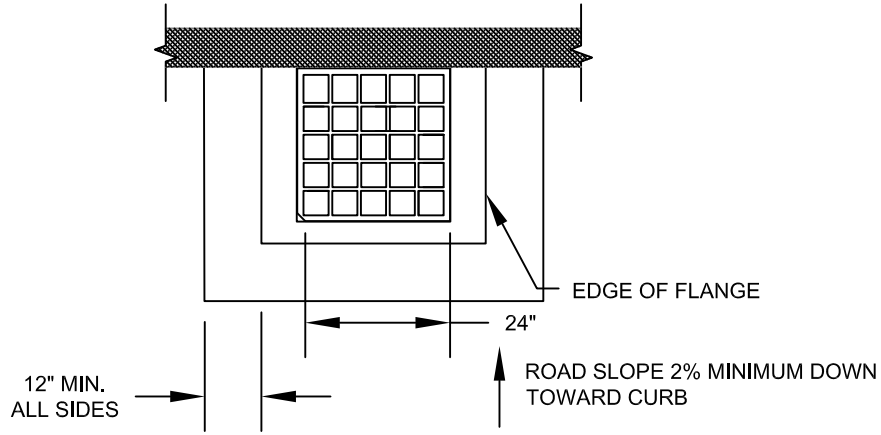

PLAN

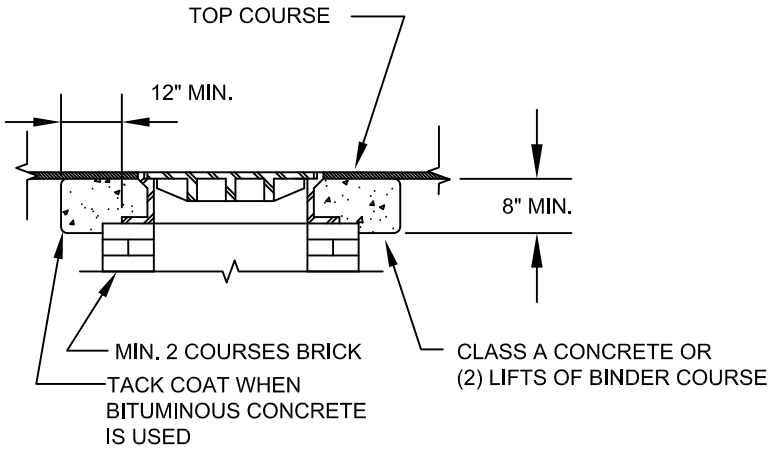

SECTION
MANHOLES

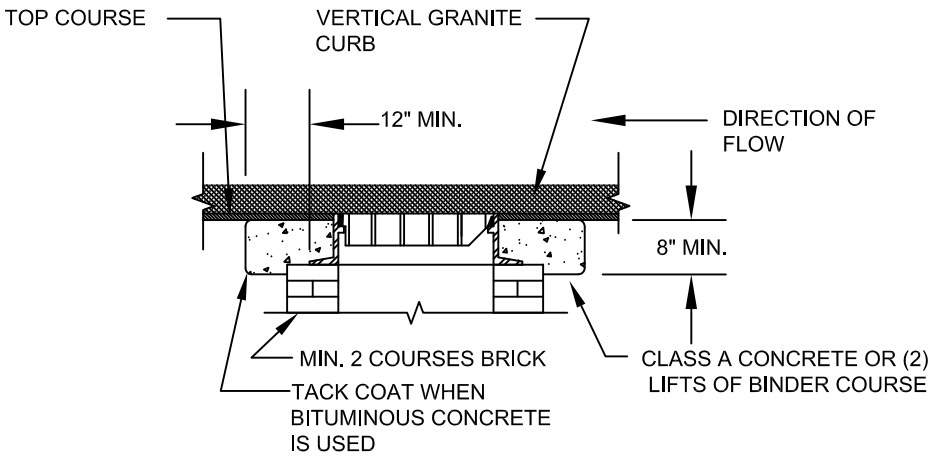

SECTION
CATCH BASINS

NOT TO SCALE

DATE: JAN. 2016
REV: 3

DETAIL NO. D-4.3.1

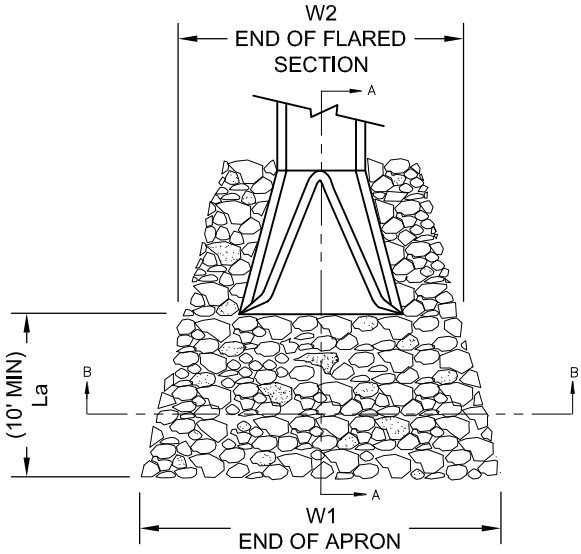

PLAN

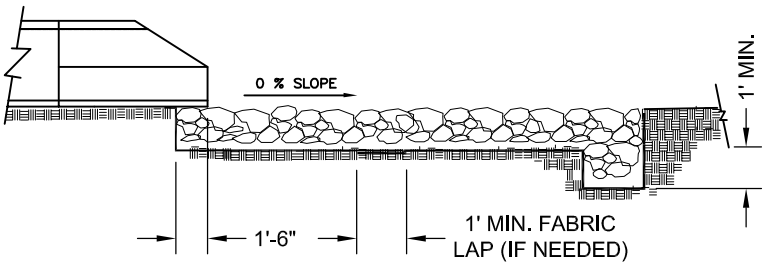

SECTION A–A

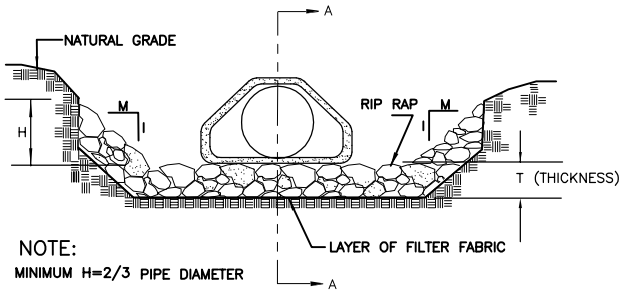

SECTION B–B

NOTES:

1. CLASS OR MEDIAN SIZE OF RIPRAP AND LENGTH, WIDTH AND DEPTH OF APRON TO BE DESIGNED BY THE ENGINEER.
2. REFER TO THE CONSTRUCTION STANDARDS FOR RIPRAP STANDARDS.
3. RIPRAP SHOULD EXTEND UP BOTH SIDES OF THE APRON AND AROUND THE END OF THE PIPE OR CULVERT AT THE DISCHARGE OUTLET AT A MAXIMUM SLOPE OF 2:1 AND A HEIGHT NOT LESS THAN TWO THIRDS THE PIPE DIAMETER OR CULVERT HEIGHT.
4. THERE SHALL BE NO OVERFLOW FROM THE END OF THE APRON TO THE SURFACE OF THE RECEIVING CHANNEL. THE AREA TO BE PAVED OR RIPRAPPED SHALL BE UNDERCUT SO THAT THE INVERT OF THE APRON SHALL BE AT THE SAME GRADE (FLUSH) WITH THE SURFACE OF THE RECEIVING CHANNEL. THE APRON SHALL HAVE A CUTOFF OR TOE WALL AT THE DOWNSTREAM END.
5. THE WIDTH W-1 OF THE END OF THE APRON SHALL BE EQUAL TO THE BOTTOM WIDTH OF THE RECEIVING CHANNEL. MAXIMUM TAPER TO RECEIVING CHANNEL 5:1.
6. ALL SUBGRADE FOR STRUCTURE TO BE COMPACTED TO 95% OR GREATER.
7. THE PLACING OF FILL, EITHER LOOSE OR COMPACTED IN THE RECEIVING CHANNEL SHALL NOT BE ALLOWED.
8. NO BENDS OR CURVES IN THE HORIZONTAL ALIGNMENT OF THE APRON WILL BE PERMITTED.
9. FILTER FABRIC SHALL BE INSTALLED ON COMPACTED SUBGRADE PRIOR TO PLACEMENT OF RIP RAP.
10. ANY DISTURBED AREA FROM END OF APRON TO RECEIVING CHANNEL MUST BE STABILIZED.

NOT TO SCALE

TOWN OF FRAMINGHAM DEPARTMENT OF PUBLIC WORKS	RIP RAP APRON AT PIPE OUTFALLS	DATE: SEPT. 2008 REV: 0	DETAIL NO. D-4.4.0

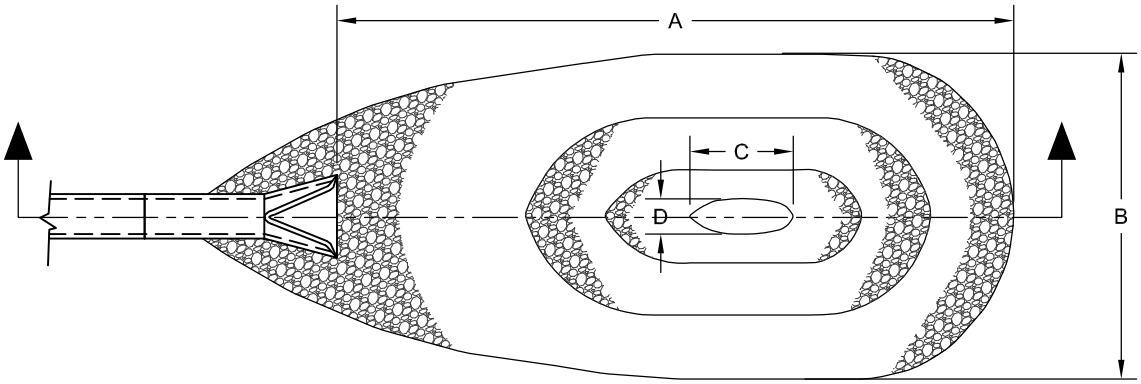

PLAN

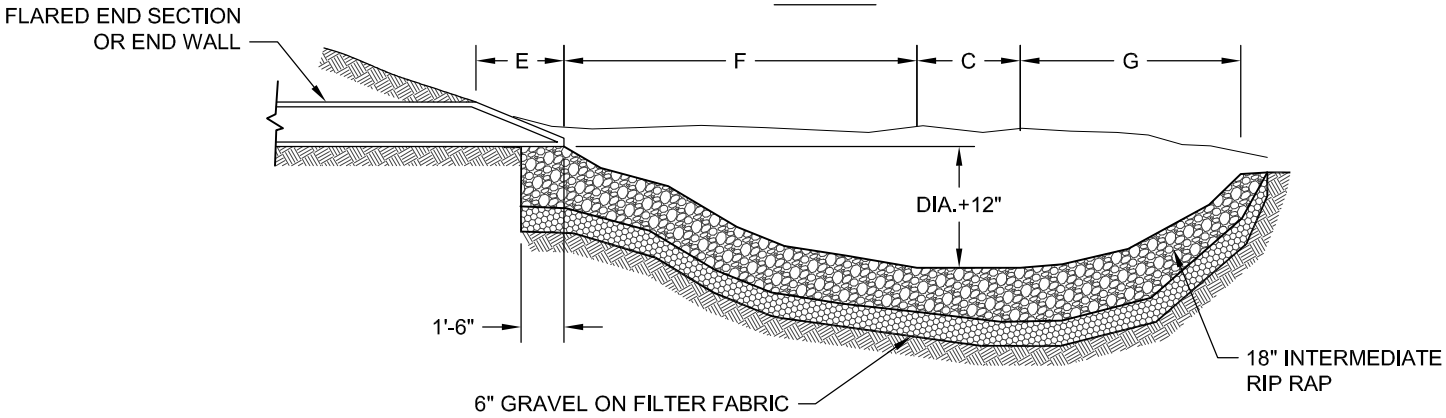

SECTION VIEW

PIPE SIZE	A	B	C	D	E	F	G	WT. RIP RAP IN TONS
15"	10'	7'	1 ½'	1'	1'	4 ½'	3'	6
18"	12'	8'	2'	1'	1'	5'	4'	8
21"	15'	9'	2 ½'	1 ½'	1'	7'	4 ½'	12
24"	17'	10'	2 ½'	1 ½'	1'	8'	5 ½'	15
30"	20'	13'	3'	2'	2'	9'	6'	22
36"	24'	16'	3 ½'	2'	2'	9 ½'	7'	33

NOTES:

1. THIS DETAIL IS TO ONLY BE USED WHEN OUTFALL HAS A CONTINUOUS FLOW OF WATER AND WITH PRIOR APPROVAL OF THE ENGINEERING DIVISION.

NOT TO SCALE

TOWN OF FRAMINGHAM DEPARTMENT OF PUBLIC WORKS	RIP RAP PLUNGE POOL	DATE: SEPT. 2008 REV: 0	DETAIL NO. D-4.4.1

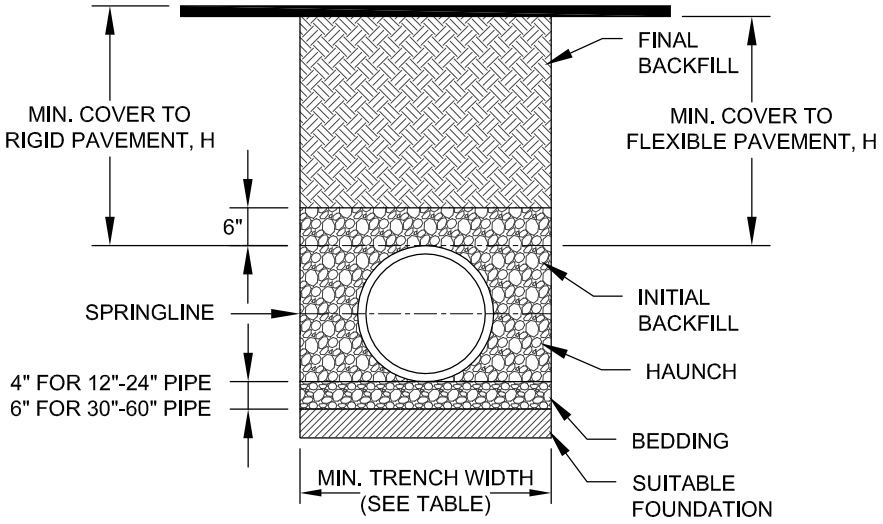

RECOMMENDED MINIMUM TRENCH WIDTHS

PIPE DIAM.	MIN. TRENCH WIDTH
12"	30"
15"	34"
18"	39"
24"	48"
30"	56"
36"	64"
42"	72"
48"	80"
54"	88"
60"	96"

NOTES:

1. ALL PIPE SYSTEMS SHALL BE INSTALLED IN ACCORDANCE WITH ASTM D2321, "STANDARD PRACTICE FOR UNDERGROUND INSTALLATION OF THERMOPLASTIC PIPE FOR SEWERS AND OTHER GRAVITY FLOW APPLICATIONS", LATEST ADDITION.
2. MEASURES SHOULD BE TAKEN TO PREVENT MIGRATION OF NATIVE FINES INTO BACKFILL MATERIAL, WHEN REQUIRED.
3. FOUNDATION: WHERE THE TRENCH BOTTOM IS UNSTABLE, THE CONTRACTOR SHALL EXCAVATE TO A DEPTH REQUIRED BY THE ENGINEER AND REPLACE WITH SUITABLE MATERIAL AS SPECIFIED BY THE ENGINEER. AS AN ALTERNATIVE AND AT THE DISCRETION OF THE DESIGN ENGINEER, THE TRENCH BOTTOM MAY BE STABILIZED USING A GEOTEXTILE MATERIAL.
4. BEDDING: SUITABLE MATERIAL SHALL BE CLASS I, II OR III. THE CONTRACTOR SHALL PROVIDE DOCUMENTATION FOR MATERIAL SPECIFICATION TO ENGINEER. UNLESS OTHERWISE NOTED BY THE ENGINEER, MINIMUM BEDDING THICKNESS SHALL BE 4" FOR 12"-24"; 6" FOR 30"-60".
5. INITIAL BACKFILL: SUITABLE MATERIAL SHALL BE CLASS I, II OR III IN THE PIPE ZONE EXTENDING NOT LESS THAN 6" ABOVE CROWN OF PIPE. THE CONTRACTOR SHALL PROVIDE DOCUMENTATION FOR MATERIAL SPECIFICATION TO ENGINEER. MATERIAL SHALL BE INSTALLED AS REQUIRED IN ASTM D2321, LATEST EDITION.
6. MINIMUM COVER: MINIMUM COVER, H, IN NON-TRAFFIC APPLICATIONS (GRASS OR LANDSCAPE AREAS) IS 12" FROM THE TOP OF PIPE TO GROUND SURFACE. ADDITIONAL COVER MAY BE REQUIRED TO PREVENT FLOATION. FOR TRAFFIC APPLICATIONS, MINIMUM COVER, H, IS 36" MEASURED FROM TOP OF PIPE TO BOTTOM OF FLEXIBLE PAVEMENT OR TO TOP OF RIGID PAVEMENT.

NOT TO SCALE

TOWN OF FRAMINGHAM DEPARTMENT OF PUBLIC WORKS	TYPICAL HDPE PIPE TRENCH DETAIL	DATE: SEPT. 2008 REV: 0	DETAIL NO. D-4.5.0

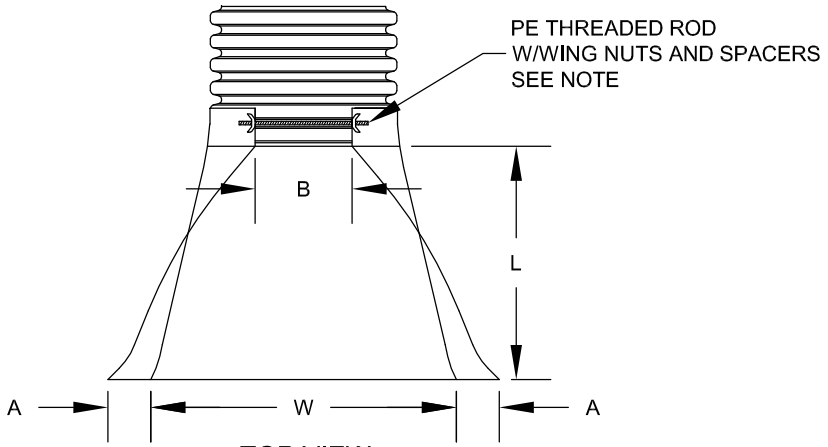

TOP VIEW

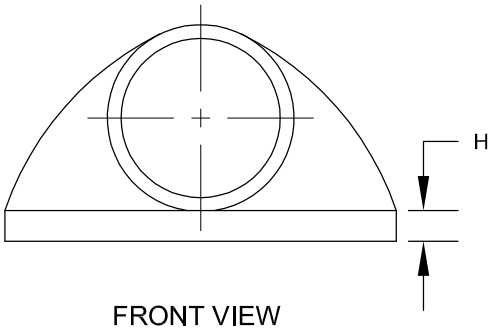

FRONT VIEW

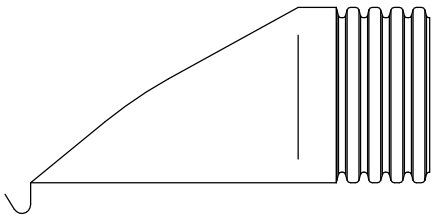

RIGHT SIDE VIEW

PIPE SIZE	A	B (MAX)	H	L	W
12 IN	6.50 IN	10.00 IN	6.50 IN	25.00 IN	29.00 IN
15 IN	6.5O IN	10.00 IN	6.50 IN	25.00 IN	29.00 IN
18 IN	7.50 IN	15.00 IN	6.50 IN	32.00 IN	35.00 IN
24 IN	7.50 IN	18.00 IN	6.50 IN	36.00 IN	45.00 IN
30 IN	7.50 IN	12.00 IN	8.60 IN	58.00 IN	63.00 IN
36 IN	7.50 IN	25.00 IN	8.60 IN	58.00 IN	63.00 IN

NOTES:

1. PE THREADED ROD W/WING NUTS PROVIDED FOR END SECTIONS 12"-24". 30" & 36" END SECTIONS REQUIRE TWO (2) THREADED RODS FOR ASSEMBLY.
2. ALL DIMENSIONS ARE NOMINAL.

NOT TO SCALE

TOWN OF FRAMINGHAM DEPARTMENT OF PUBLIC WORKS	FLARED HDPE END SECTIONS	DATE: SEPT. 2008 REV: 0	DETAIL NO. D-4.6.0

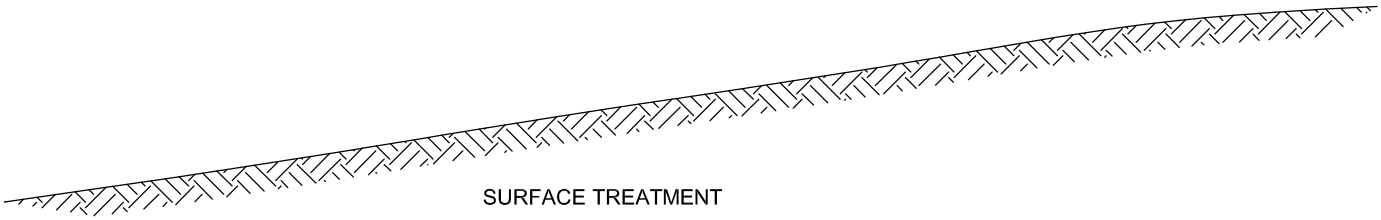

SURFACE TREATMENT

SURFACE TREATMENT:

4" PLANTABLE SOIL AND SEED OVER.
8" COMPACT GRAVEL OR 4" MINIMUM DEPTH OF PAVEMENT MILLING MULCH PLACED DIRECTLY OVER GEOTEXTILE AND CRUSHED STONE BOX.

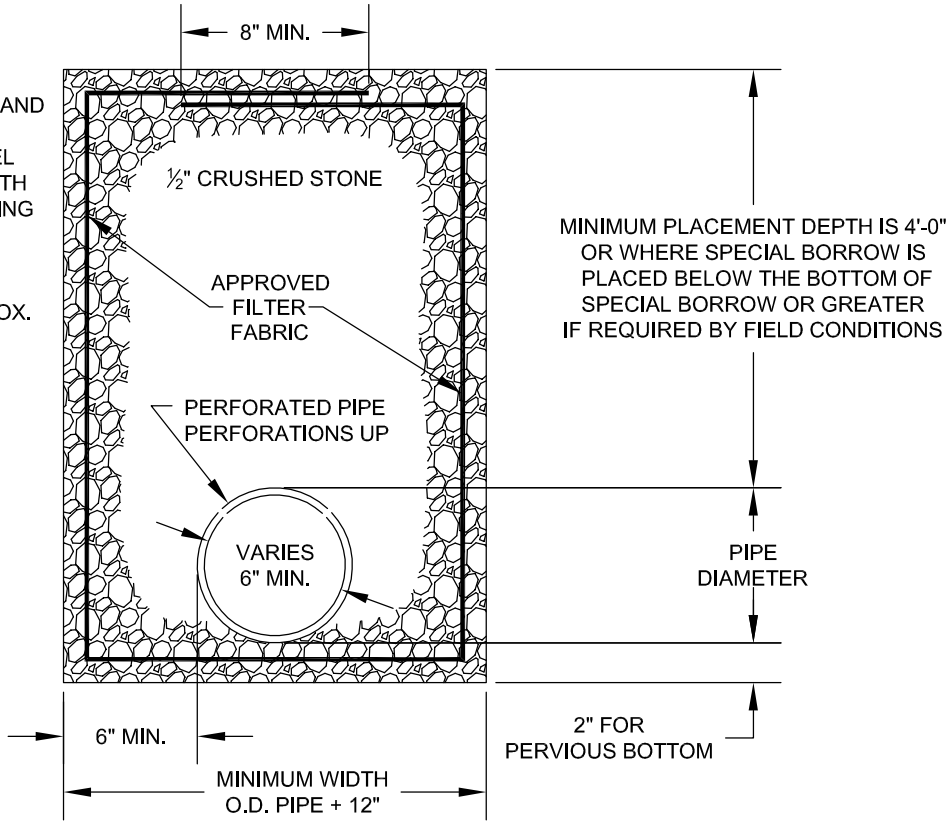

NOTES:

1. PIPE UNDER R.O.W. SCHEDULE 20 OR 40 PERFORATED PVC.
2. OUTLET PIPE UNDER ROADWAY SHALL BE SCHEDULE 80.
3. PIPE SHALL BE SET AT BOTTOM OF TRENCH FOR IMPERVIOUS BOTTOM.
4. SUBDRAIN LOCATED APPROXIMATELY AT INTERSECTION OF TANGENTS.
5. GRAVEL (AND SPECIAL BORROW WHERE REQUIRED) SHALL INTERSECT CRUSHED STONE FOR SUBDRAIN.
6. FILTER FABRIC SHALL BE APPROVED, MHD TYPE III WATER PERMEABLE SYNTHETIC FABRIC.

NOT TO SCALE

TOWN OF FRAMINGHAM DEPARTMENT OF PUBLIC WORKS	SUBDRAIN	DATE: SEPT. 2008 REV: 0	DETAIL NO. D-4.7.0

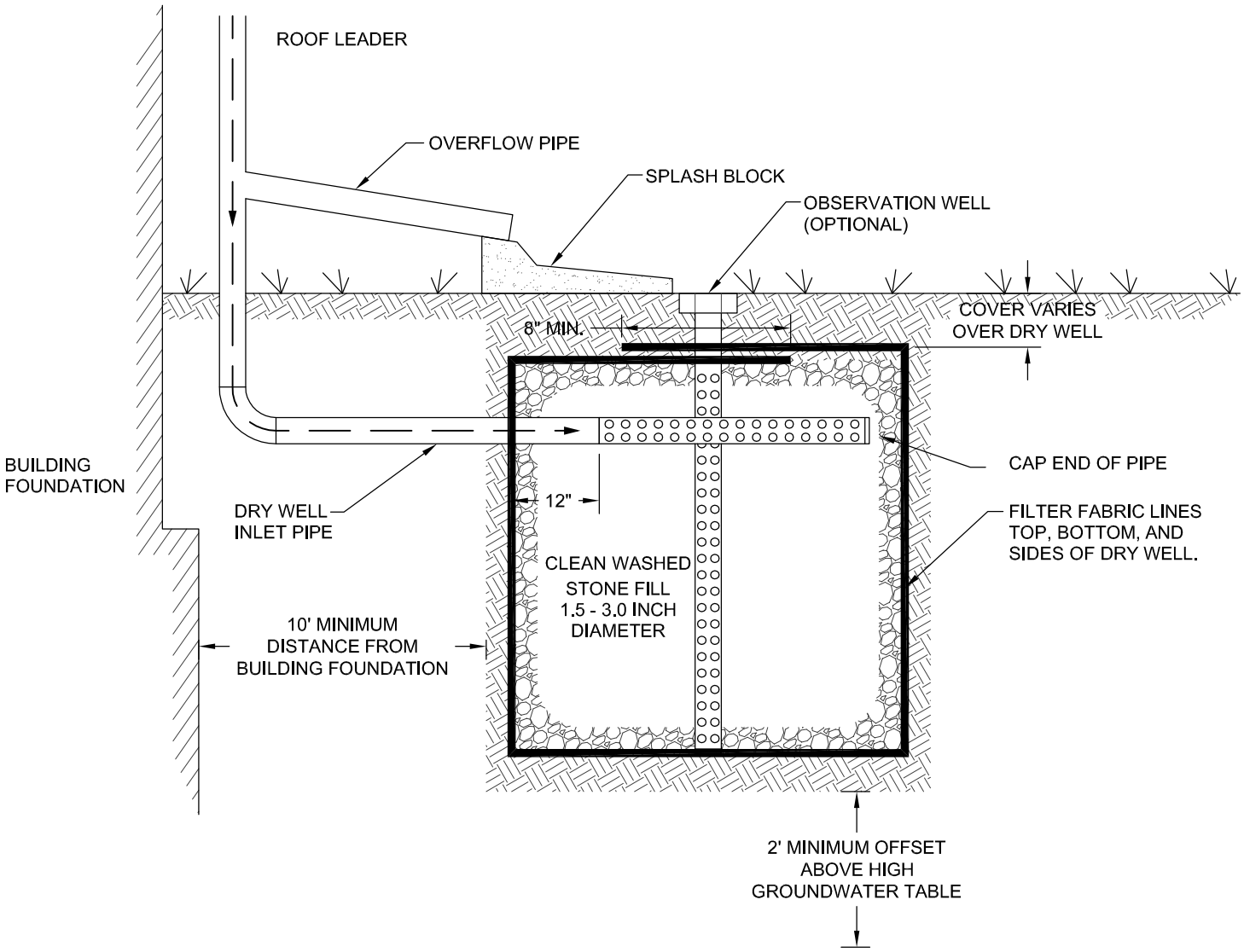

NOTES:

1. DRY WELL TO BE SIZED BY DESIGN ENGINEER FOR PROPOSED CONDITIONS.
2. OPTIONAL: INSTALL REINFORCED CONCRETE CHAMBER WITH HOLES, SURROUNDED WITH CLEAN WASHED STONE, AND FILTER FABRIC.

NOT TO SCALE

TOWN OF FRAMINGHAM DEPARTMENT OF PUBLIC WORKS	DRY WELL	DATE: MARCH 2011 REV: 2	DETAIL NO. D-4.8.0