REPLACEMENT AND NEW BOUND INSTALLATION SHALL BE DIRECTLY OVERSEEN BY A PROFESSIONAL LAND SURVEYOR LICENSED IN THE COMMONWEALTH. SURVEYOR'S NOTES AND SETTING DATA SHALL BE PROVIDED TO THE ENGINEERING DIVISION.

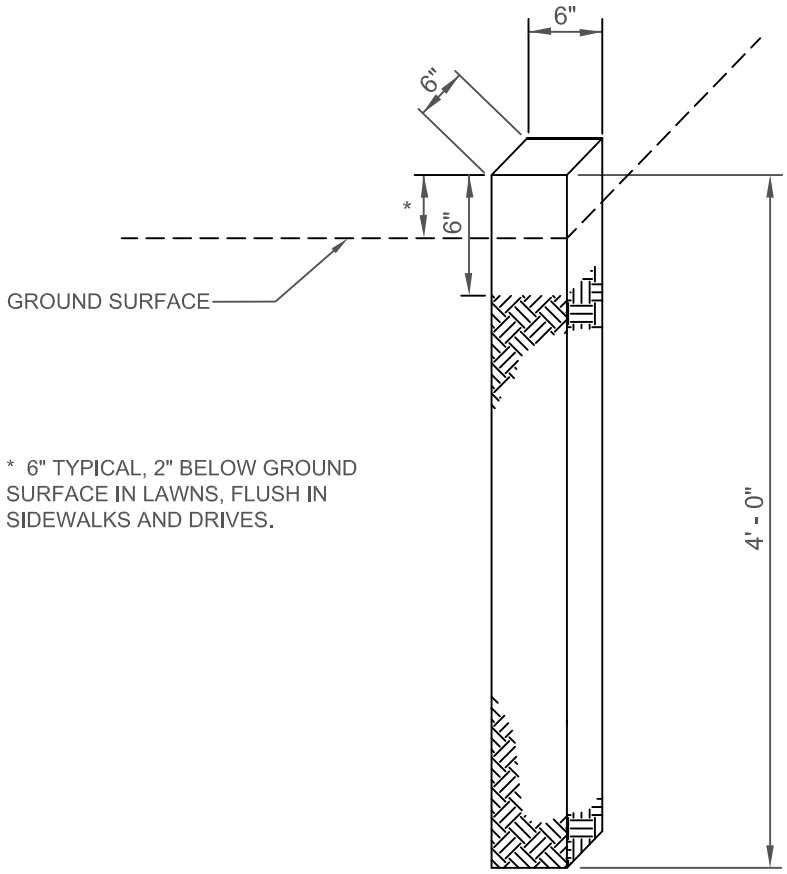

* 6" TYPICAL, 2" BELOW GROUND SURFACE IN LAWNS, FLUSH IN SIDEWALKS AND DRIVES.

NOTES:

1. TOP AND 4 SIDES FOR A DISTANCE OF 6" FROM TOP SHALL BE HAMMERED SMOOTH.
2. FOR DESCRIPTIONS, MATERIALS AND CONSTRUCTION METHODS SEE STANDARD SPECIFICATIONS.
3. ALL EXISTING ROADWAY MONUMENTATION SHALL BE INVENTORIED AND PROTECTED. ANY AND ALL PROPOSED IMPACTS SHALL BE BROUGHT TO THE ATTENTION OF THE ENGINEERING DIVISION IMMEDIATELY.
4. PLEASE REFERENCE ADDITIONAL GRANITE BOUND INFORMATION IDENTIFIED UNDER THE TOF CONSTRUCTION STANDARDS: SECTION 1.3.4 A AND B (ROADWAY BOUNDS AND MONUMENTS), SECION 1.7.A.12 (CONDITIONS FOR STREET ACCEPTANCE - BOUND LAYOUT AND EASEMENT INSPECTION REPORT), SECTION 5.2.15 A (GRANITE BOUNDS), AND SECTION 5.3.12 A, B, AND C (GRANITE BOUNDS - INVENTORY AND REQUIREMENTS FOR SETTING OR REPLACING BOUNDS).

NOT TO SCALE

TOWN OF FRAMINGHAM DEPARTMENT OF PUBLIC WORKS	GRANITE BOUND DETAIL	DATE: MAR. 2015 REV: 1	DETAIL NO. R-5.7.6