Site/ Arch. Plans

Issued for: **Land Disturbance Special Permit**
Site Plan Review
Public Way Access Permit

Date Issued: December 17, 2013

Latest Issue: December 17, 2013

125 Penn

125 Pennsylvania Ave.
Framingham, MA

FRAMINGHAM PLANNING BOARD
PLAN ENDORSEMENT

DATE OF ENDORSEMENT: _____

Sheet Index

Number	Drawing Title	Latest Issue
C-1	Legend and General Notes	12/17/2013
C-2	Locus Plan	12/17/2013
C-3	Layout and Materials Plan	12/17/2013
C-4	Grading Plan	12/17/2013
C-5	Utility Plan	12/17/2013
C-6	Erosion and Sediment Control Plan	12/17/2013
C-7	Details	12/17/2013
C-8	Details	12/17/2013
C-9	Details	12/17/2013
C-10	Details	12/17/2013
C-11	Details	12/17/2013
C-12	Cut and Fill Plan	12/17/2013
C-13	Snow Management Plan	12/17/2013
L-1	Planting Plan	12/17/2013
L-2	Planting Plan Enlargements and Details	12/17/2013
L-3	Irrigation Coverage Plan	12/17/2013

Reference Drawings

Number	Drawing Title	Latest Issue
SV-1	Existing Conditions Plan of Land	7/31/2009
SL-1	Site Lighting Photometrics Plan	12/17/2013
A-101	First Floor Plan	12/17/2013
A-110	Roof Plan	12/17/2013
A-200	Exterior Elevations Plan	12/17/2013

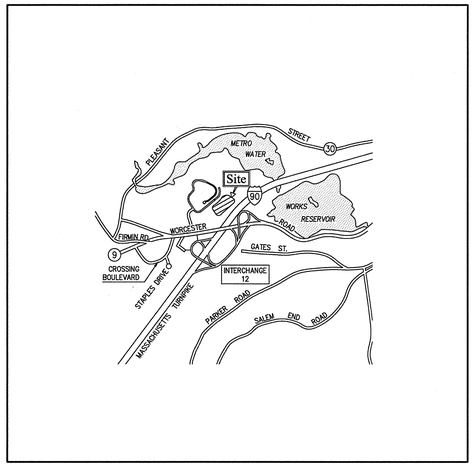

Site Location Map ↑ 0 1000 2000 Feet

Property Owners

Owner/Applicant:
Crossroads Center Acquisitions, LLC
c/o The Congress Group
33 Arch Street Suite 1100
Boston, MA 02110-1490
617-897-7200 · Fax 617-897-7201

Assessor's Map 460, Block 8
Lot: 1, 20, and 22

ZONING TABLE

ZONE: TECHNOLOGY PARK
USE: OFFICE

	REQUIRED	EXISTING	PROPOSED
MIN. LOT AREA	43,560 S.F.	436,765 S.F.	436,765 S.F.
FRONTAGE	100 FEET	778 FEET	778 FEET
FRONT SETBACK	30 FEET	40.3 FEET	35.2 FEET
SIDE SETBACK	15 FEET	25 FEET	24.2 FEET
REAR SETBACK	NOT REQUIRED	15 FEET	102.6 FEET
MAX. BLDG. HEIGHT	6 STORY (100 FEET)	29 FEET	1 STORY (31 FEET)
FLOOR AREA RATIO (FAR)	0.4 (BASE)	0.26	0.22
LANDSCAPE OPEN SPACE	131,030 S.F.	204,329 S.F.	184,553 S.F.
LANDSCAPE SURFACE RATIO (LSR)	25%	47%	42%
OTHER OPEN SPACE	NOT REQUIRED	0 S.F.	4,910 S.F.
OPEN SPACE/ LOT AREA RATIO	NOT REQUIRED	0%	1.0%
LOT COVERAGE (BUILDINGS)	NOT REQUIRED	114,575 S.F.	84,200 S.F.
LOT AREAS/PERCENTAGES (BUILDINGS)	NOT REQUIRED	26%	20%
PAVED AREAS	NOT REQUIRED	117,861 S.F.	163,102 S.F.
PAVED AREAS/LOT AREA RATIO	NOT REQUIRED	27%	37%

NOTES:
1. BASE FAR AND 100 FOOT HEIGHT AS PER: AMENDMENTS TO ZONING BY-LAW FOR THE TOWN OF FRAMINGHAM (THE "AMENDMENTS") ADOPTED AT THE ANNUAL TOWN MEETING ON APRIL 29, 2008.
2. MINIMUM LANDSCAPED OPEN SPACE IS 25% OF GROSS FLOOR AREA.
3. FLOOR AREA = 84,200 SF FIRST FLOOR + 14,000 SF MEZZANINE = 98,200 SF.
FAR = 98,200 / 436,765 SF.

LOADING SUMMARY

REQUIRED	PROVIDED	
3	2	(REQUESTING WAVIER)

PARKING SUMMARY

REQUIRED	PROVIDED	ACCESSIBLE PARKING SPACES (STANDARD + VAN) REQUIRED	ACCESSIBLE PARKING SPACES (STANDARD + VAN) PROVIDED	VAN ACCESSIBLE PARKING SPACES REQUIRED	VAN ACCESSIBLE PARKING SPACES PROVIDED
312	393	9	9	2	9

PARKING REQUIREMENTS
OFFICE: 68,740 S.F. / 250 S.F./1 SPACE = 275 SPACES
R&D: 29,460 S.F. / 800 S.F./1 SPACE = 37 SPACES
TOTAL: 312 SPACES

Vanasse Hangen Brustlin, Inc.
Transportation
Land Development
Environmental Services

99 High Street
Boston, Massachusetts 02110
617.728.7777 • FAX 617.728.7782

COMMONWEALTH OF MASSACHUSETTS
CHI Y. IAAN
CIVIL
NO. 46641
REGISTERED PROFESSIONAL ENGINEER
12-17-13

VHB Project No. 10734.00
Framingham, MA
Issued for: Local Permitting - 12/17/2013

\\VHB\PROJ\BOSTON\10734.00\CAD\LD\PLANSET\10734.00-COV 3 December 2006

Saved Tuesday, December 24, 2013 9:06:04 AM JALBANI Plotted Monday, January 06, 2014 12:46:15 PM Jackson, Mark

Legend

Exist.	Prop.	
		PROPERTY LINE
		PROJECT LIMIT LINE
		RIGHT-OF-WAY/PROPERTY LINE
		EASEMENT
		BUILDING SETBACK
		PARKING SETBACK
10+00	10+00	BASELINE
		CONSTRUCTION LAYOUT
		ZONING LINE
		TOWN LINE
		LIMIT OF DISTURBANCE
		WETLAND LINE WITH FLAG
		FLOODPLAIN
BLSF		BORDERING LAND SUBJECT TO FLOODING
BZ		WETLAND BUFFER ZONE
NDZ		NO DISTURB ZONE
200'RA		200' RIVERFRONT AREA
		GRAVEL ROAD
EOP		EDGE OF PAVEMENT
BB	BB	BITUMINOUS BERM
CCB	CCB	CAPE COD BERM
BC	BC	BITUMINOUS CURB
CC	CC	CONCRETE CURB
	CG	CURB AND GUTTER
CC	ECC	EXTRUDED CONCRETE CURB
CC	MCC	MONOLITHIC CONCRETE CURB
CC	PCC	PRECAST CONC. CURB
SGE	SGE	SLOPED GRAN. EDGING
VCC	VCC	VERT. GRAN. CURB
		LIMIT OF CURB TYPE
		SAWCUT
		BUILDING
	EN	BUILDING ENTRANCE
	LD	LOADING DOCK
		BOLLARD
D	D	DUMPSTER PAD
		SIGN
		DOUBLE SIGN
		STEEL GUARDRAIL
		WOOD GUARDRAIL
		PATH
		TREE LINE
		WIRE FENCE
		FENCE
		STOCKADE FENCE
		STONE WALL
		RETAINING WALL
		STREAM / POND / WATER COURSE
		DETENTION BASIN
		HAY BALES
		SILT FENCE
		SILT SOCK / STRAW WATTLE
4	4	MINOR CONTOUR
20	20	MAJOR CONTOUR
10	10	PARKING COUNT
	C10	COMPACT PARKING STALLS
DYL	DYL	DOUBLE YELLOW LINE
SL	SL	STOP LINE
		CROSSWALK
		ACCESSIBLE CURB RAMP
		ACCESSIBLE PARKING
VAN	VAN	VAN-ACCESSIBLE PARKING

Exist.	Prop.	
		CONCRETE
		HEAVY DUTY PAVEMENT
		RIPRAP
		CONSTRUCTION ENTRANCE
27.35 TC	27.35 TC	TOP OF CURB ELEVATION
26.85 BC	26.85 BC	BOTTOM OF CURB ELEVATION
132.75	132.75	SPOT ELEVATION
45.0 TW 36.5 BW	45.0 TW 36.5 BW	TOP & BOTTOM OF WALL ELEVATION
		BORING LOCATION
		TEST PIT LOCATION
MW	MW	MONITORING WELL
UD	UD	UNDERDRAIN
12"D	12"D	DRAIN
6"RD	6"RD	ROOF DRAIN
12"S	12"S	SEWER
FM	FM	FORCE MAIN
OHW	OHW	OVERHEAD WIRE
6"W	6"W	WATER
4"FP	4"FP	FIRE PROTECTION
	2"DW	DOMESTIC WATER
3"G	G	GAS
E	E	ELECTRIC
STM	STM	STEAM
T	T	TELEPHONE
FA	FA	FIRE ALARM
CATV	CATV	CABLE TV
		CATCH BASIN
		DOUBLE CATCH BASIN
		GUTTER INLET
		DRAIN MANHOLE
		TRENCH DRAIN
		PLUG OR CAP
CO	CO	CLEANOUT
		FLARED END SECTION
		HEADWALL
		SEWER MANHOLE
CS	CS	CURB STOP & BOX
WV	WV	WATER VALVE & BOX
TSV	TSV	TAPPING SLEEVE, VALVE & BOX
		SIAMESE CONNECTION
HYD	HYD	FIRE HYDRANT
WM	WM	WATER METER
PIV	PIV	POST INDICATOR VALVE
W	W	WATER WELL
GG	GG	GAS GATE
GM	GM	GAS METER
	EMH	ELECTRIC MANHOLE
EM	EM	ELECTRIC METER
		LIGHT POLE
	TMH	TELEPHONE MANHOLE
T	T	TRANSFORMER PAD
		UTILITY POLE
		GUY POLE
		GUY WIRE & ANCHOR
HH	HH	HAND HOLE
PB	PB	PULL BOX
Matchline		MATCHLINE

Abbreviations

General

ABAN	ABANDON
ACR	ACCESSIBLE CURB RAMP
ADJ	ADJUST
APPROX	APPROXIMATE
BIT	BITUMINOUS
BS	BOTTOM OF SLOPE
BWLL	BROKEN WHITE LANE LINE
CONC	CONCRETE
DYCL	DOUBLE YELLOW CENTER LINE
EL	ELEVATION
ELEV	ELEVATION
EXIST	EXISTING
FDN	FOUNDATION
FFE	FIRST FLOOR ELEVATION
GRAN	GRANITE
GTD	GRADE TO DRAIN
LA	LANDSCAPE AREA
LOD	LIMIT OF DISTURBANCE
MAX	MAXIMUM
MIN	MINIMUM
NIC	NOT IN CONTRACT
NTS	NOT TO SCALE
PERF	PERFORATED
PROP	PROPOSED
REM	REMOVE
RET	RETAIN
R&D	REMOVE AND DISPOSE
R&R	REMOVE AND RESET
SWEL	SOLID WHITE EDGE LINE
SWLL	SOLID WHITE LANE LINE
TS	TOP OF SLOPE
TYP	TYPICAL

Utility

CB	CATCH BASIN
CMP	CORRUGATED METAL PIPE
CO	CLEANOUT
DCB	DOUBLE CATCH BASIN
DMH	DRAIN MANHOLE
CIP	CAST IRON PIPE
COND	CONDUIT
DIP	DUCTILE IRON PIPE
FES	FLARED END SECTION
FM	FORCE MAIN
F&G	FRAME AND GRATE
F&C	FRAME AND COVER
GI	GUTTER INLET
GT	GREASE TRAP
HDPE	HIGH DENSITY POLYETHYLENE PIPE
HH	HANDHOLE
HW	HEADWALL
HYD	HYDRANT
INV	INVERT ELEVATION
I=	INVERT ELEVATION
LP	LIGHT POLE
MES	METAL END SECTION
PWW	PAVED WATER WAY
PVC	POLYVINYLCHLORIDE PIPE
PIV	POST INDICATOR VALVE
RCP	REINFORCED CONCRETE PIPE
R=	RIM ELEVATION
SMH	SEWER MANHOLE
TSV	TAPPING SLEEVE, VALVE AND BOX
UG	UNDERGROUND
UP	UTILITY POLE

Notes:

General

1. CONTRACTOR SHALL NOTIFY "DIG-SAFE" (1-888-344-7233) AT LEAST 72 HOURS BEFORE EXCAVATING.
2. CONTRACTOR SHALL BE RESPONSIBLE FOR SITE SECURITY AND JOB SAFETY. CONSTRUCTION ACTIVITIES SHALL BE IN ACCORDANCE WITH OSHA STANDARDS AND LOCAL REQUIREMENTS.
3. ACCESSIBLE ROUTES, PARKING SPACES, RAMPS, SIDEWALKS AND WALKWAYS SHALL BE CONSTRUCTED IN CONFORMANCE WITH THE FEDERAL AMERICANS WITH DISABILITIES ACT AND WITH STATE AND LOCAL LAWS AND REGULATIONS (WHICHEVER ARE MORE STRINGENT).
4. AREAS DISTURBED DURING CONSTRUCTION AND NOT RESTORED WITH IMPERVIOUS SURFACES (BUILDINGS, PAVEMENTS, WALKS, ETC.) SHALL RECEIVE 6 INCHES LOAM AND SEED.
5. WITHIN THE LIMITS OF THE BUILDING FOOTPRINT, THE SITE CONTRACTOR SHALL PERFORM EARTHWORK OPERATIONS REQUIRED UP TO SUBGRADE ELEVATIONS.
6. WORK WITHIN THE LOCAL RIGHTS-OF-WAY SHALL CONFORM TO LOCAL MUNICIPAL STANDARDS. WORK WITHIN STATE RIGHTS-OF-WAY SHALL CONFORM TO THE LATEST EDITION OF THE STATE HIGHWAY DEPARTMENTS STANDARD SPECIFICATIONS FOR HIGHWAYS AND BRIDGES.
7. UPON AWARD OF CONTRACT, CONTRACTOR SHALL MAKE NECESSARY CONSTRUCTION NOTIFICATIONS AND APPLY FOR AND OBTAIN NECESSARY PERMITS, PAY FEES, AND POST BONDS ASSOCIATED WITH THE WORK INDICATED ON THE DRAWINGS, IN THE SPECIFICATIONS, AND IN THE CONTRACT DOCUMENTS. DO NOT CLOSE OR OBSTRUCT ROADWAYS, SIDEWALKS, AND FIRE HYDRANTS, WITHOUT APPROPRIATE PERMITS.
8. TRAFFIC SIGNAGE AND PAVEMENT MARKINGS SHALL CONFORM TO THE MANUAL OF UNIFORM TRAFFIC CONTROL DEVICES.
9. AREAS OUTSIDE THE LIMITS OF PROPOSED WORK DISTURBED BY THE CONTRACTOR'S OPERATIONS SHALL BE RESTORED BY THE CONTRACTOR TO THEIR ORIGINAL CONDITION.
10. IN THE EVENT THAT SUSPECTED CONTAMINATED SOIL, GROUNDWATER, AND OTHER MEDIA ARE ENCOUNTERED DURING EXCAVATION AND CONSTRUCTION ACTIVITIES BASED ON VISUAL, OLFACTORY, OR OTHER EVIDENCE, THE CONTRACTOR SHALL STOP WORK IN THE VICINITY OF THE SUSPECT MATERIAL TO AVOID FURTHER SPREADING OF THE MATERIAL, AND SHALL NOTIFY THE OWNER IMMEDIATELY SO THAT THE APPROPRIATE TESTING AND SUBSEQUENT ACTION CAN BE TAKEN.
11. CONTRACTOR SHALL PREVENT DUST, SEDIMENT, AND DEBRIS FROM EXITING THE SITE AND SHALL BE RESPONSIBLE FOR CLEANUP, REPAIRS AND CORRECTIVE ACTION IF SUCH OCCURS.
12. DAMAGE RESULTING FROM CONSTRUCTION LOADS SHALL BE REPAIRED BY THE CONTRACTOR.
13. CONTRACTOR SHALL CONTROL STORMWATER RUNOFF DURING CONSTRUCTION TO PREVENT ADVERSE IMPACTS TO OFF SITE AREAS, AND SHALL BE RESPONSIBLE TO REPAIR RESULTING DAMAGES, IF ANY.
14. THIS PROJECT DISTURBS MORE THAN ONE ACRE OF LAND AND FALLS WITHIN THE NPDES CONSTRUCTION GENERAL PERMIT (CGP) PROGRAM AND EPA JURISDICTION. PRIOR TO THE START OF CONSTRUCTION CONTRACTOR IS TO FILE A CGP NOTICE OF INTENT WITH THE EPA AND PREPARE A STORMWATER POLLUTION PREVENTION PLAN IN ACCORDANCE WITH THE NPDES REGULATIONS. CONTRACTOR SHALL CONFIRM THE OWNER HAS ALSO FILED A NOTICE OF INTENT WITH THE EPA.
15. CONTRACTOR TO OBTAIN STREET OPENING PERMIT (SOP) FOR ALL WORK (DRIVEWAY, GRADING, UTILITY, SIDEWALK, CURBING, ETC.) WITHIN THE TOWN OF FRAMINGHAM RIGHT OF WAY FROM THE DEPARTMENT OF PUBLIC WORKS (DPW). ALL WORK MUST CONFORM TO SAID SOP POLICY.
16. THE APPROVED SITE PLAN SHALL BE KEPT ON-SITE FOR INSPECTION.
17. CONTRACTOR TO PROVIDE AS-BUILT PLANS FOR ALL PRIVATE AND PUBLIC UTILITY IMPROVEMENTS. AS-BUILT PLAN SHALL MEET TOWN OF FRAMINGHAM AS-BUILT PLAN SUBMITTAL STANDARDS IN BOTH HARD COPY AND ELECTRONIC FORMAT. AS-BUILT PLAN TO BE SUBMITTED TO THE DPW 10 DAYS PRIOR TO REQUEST FOR AN OCCUPANCY PERMIT.

Utilities

1. THE LOCATIONS, SIZES, AND TYPES OF EXISTING UTILITIES ARE SHOWN AS AN APPROXIMATE REPRESENTATION ONLY. THE OWNER OR IT'S REPRESENTATIVE(S) HAVE NOT INDEPENDENTLY VERIFIED THIS INFORMATION AS SHOWN ON THE PLANS. THE UTILITY INFORMATION SHOWN DOES NOT GUARANTEE THE ACTUAL EXISTENCE, SERVICEABILITY, OR OTHER DATA CONCERNING THE UTILITIES, NOR DOES IT GUARANTEE AGAINST THE POSSIBILITY THAT ADDITIONAL UTILITIES MAY BE PRESENT THAT ARE NOT SHOWN ON THE PLANS. PRIOR TO ORDERING MATERIALS AND BEGINNING CONSTRUCTION, THE CONTRACTOR SHALL VERIFY AND DETERMINE THE EXACT LOCATIONS, SIZES, AND ELEVATIONS OF THE POINTS OF CONNECTIONS TO EXISTING UTILITIES AND, SHALL CONFIRM THAT THERE ARE NO INTERFERENCES WITH EXISTING UTILITIES AND THE PROPOSED UTILITY ROUTES, INCLUDING ROUTES WITHIN THE PUBLIC RIGHTS OF WAY.
2. WHERE AN EXISTING UTILITY IS FOUND TO CONFLICT WITH THE PROPOSED WORK, OR EXISTING CONDITIONS DIFFER FROM THOSE SHOWN SUCH THAT THE WORK CANNOT BE COMPLETED AS INTENDED, THE LOCATION, ELEVATION, AND SIZE OF THE UTILITY SHALL BE ACCURATELY DETERMINED WITHOUT DELAY BY THE CONTRACTOR, AND THE INFORMATION FURNISHED IN WRITING TO THE OWNER'S REPRESENTATIVE FOR THE RESOLUTION OF THE CONFLICT AND CONTRACTOR'S FAILURE TO NOTIFY PRIOR TO PERFORMING ADDITIONAL WORK RELEASES OWNER FROM OBLIGATIONS FOR ADDITIONAL PAYMENTS WHICH OTHERWISE MAY BE WARRANTED TO RESOLVE THE CONFLICT.
3. SET CATCH BASIN RIMS, AND INVERTS OF SEWERS, DRAINS, AND DITCHES IN ACCORDANCE WITH ELEVATIONS ON THE GRADING AND UTILITY PLANS.
4. RIM ELEVATIONS FOR DRAIN AND SEWER MANHOLES, WATER VALVE COVERS, GAS GATES, ELECTRIC AND TELEPHONE PULL BOXES, AND MANHOLES, AND OTHER SUCH ITEMS, ARE APPROXIMATE AND SHALL BE SET/RESET AS FOLLOWS:
   - A. PAVEMENTS AND CONCRETE SURFACES: FLUSH
   - B. ALL SURFACES ALONG ACCESSIBLE ROUTES: FLUSH
   - C. LANDSCAPE, LOAM AND SEED, AND OTHER EARTH SURFACE AREAS: ONE INCH ABOVE SURROUNDING AREA AND TAPER EARTH TO THE RIM ELEVATION.
5. THE LOCATION, SIZE, DEPTH, AND SPECIFICATIONS FOR CONSTRUCTION OF PROPOSED PRIVATE UTILITY SERVICES SHALL BE INSTALLED ACCORDING TO THE REQUIREMENTS PROVIDED BY, AND APPROVED BY, THE RESPECTIVE UTILITY COMPANY (GAS, TELEPHONE, ELECTRIC, FIRE ALARM, ETC.). FINAL DESIGN LOADS AND LOCATIONS TO BE COORDINATED WITH OWNER AND ARCHITECT.
6. CONTRACTOR SHALL ASSIST IN MAKING ARRANGEMENTS ARRANGEMENTS FOR AND SHALL BE RESPONSIBLE FOR PAYING FEES FOR POLE RELOCATION AND FOR THE ALTERATION AND ADJUSTMENT OF GAS, ELECTRIC, TELEPHONE, FIRE ALARM, AND ANY OTHER PRIVATE UTILITIES, WHETHER WORK IS PERFORMED BY CONTRACTOR OR BY THE UTILITIES COMPANY.
7. UTILITY PIPE MATERIALS SHALL BE AS FOLLOWS, UNLESS OTHERWISE NOTED ON THE PLAN:
   - A. WATER PIPES 3" OR LARGER SHALL BE CEMENT LINED DUCTILE IRON (DICL)
   - B. SANITARY SEWER PIPES SHALL BE (SDR 35) POLYVINYL CHLORIDE (PVC) SEWER PIPE
   - C. STORM DRAINAGE PIPES SHALL BE (HDPE)
   - D. PIPE INSTALLATION AND MATERIALS SHALL COMPLY WITH THE STATE PLUMBING CODE WHERE APPLICABLE. CONTRACTOR SHALL COORDINATE WITH LOCAL PLUMBING INSPECTOR PRIOR TO BEGINNING WORK. SEWER AND DRAIN PIPES SHALL BE INSTALLED BY A TOWN OF FRAMINGHAM LICENSED DRAIN-LAYER.
8. CONTRACTOR SHALL COORDINATE WITH ELECTRICAL CONTRACTOR AND SHALL FURNISH EXCAVATION, INSTALLATION, AND BACKFILL OF ELECTRICAL FURNISHED SITEWORK RELATED ITEMS SUCH AS PULL BOXES, CONDUITS, DUCT BANKS, LIGHT POLE BASES, AND CONCRETE PADS. SITE CONTRACTOR SHALL FURNISH CONCRETE ENCASEMENT OF DUCT BANKS IF REQUIRED BY THE UTILITY COMPANY AND AS INDICATED ON THE DRAWINGS.
9. CONTRACTOR SHALL EXCAVATE AND BACKFILL TRENCHES FOR GAS IN ACCORDANCE WITH GAS COMPANY'S REQUIREMENTS.
10. ALL DRAINAGE AND SANITARY STRUCTURE INTERIOR DIAMETERS (4' MIN.) SHALL BE DETERMINED BY THE MANUFACTURER BASED ON THE PIPE CONFIGURATIONS SHOWN ON THESE PLANS AND LOCAL MUNICIPAL STANDARDS. FOR MANHOLES THAT ARE 20 FEET IN DEPTH AND GREATER, THE MINIMUM DIAMETER SHALL BE 5 FEET.
11. ALL SITE UTILITIES AND WORK WITHIN THE PUBLIC WAY MUST BE INSPECTED BY A DPW UTILITY INSPECTOR. CALL MR. MICHAEL AHEARN (508) 958-3819 48 HOURS PRIOR TO START OF WORK TO SCHEDULE THE INSPECTIONS.
12. ALL TRENCHING WORK SHALL COMPLY TO THE TOWN OF FRAMINGHAM TRENCH OPENING PERMIT. THE CONTRACT IS TO OBTAIN SUCH PERMIT AT DPW PRIOR TO CONSTRUCTION.

Layout and Materials

1. DIMENSIONS ARE FROM THE FACE OF CURB, FACE OF BUILDING, FACE OF WALL, AND CENTER LINE OF PAVEMENT MARKINGS, UNLESS OTHERWISE NOTED.
2. CURB RADII ARE 3 FEET UNLESS OTHERWISE NOTED.
3. CURBING SHALL BE CAPE COD BERM WITHIN THE SITE UNLESS OTHERWISE INDICATED ON THE PLANS.
4. SEE ARCHITECTURAL DRAWINGS FOR EXACT BUILDING DIMENSIONS AND DETAILS CONTIGUOUS TO THE BUILDING, INCLUDING SIDEWALKS, RAMPS, BUILDING ENTRANCES, STAIRWAYS, UTILITY PENETRATIONS, CONCRETE DOOR PADS, COMPACTOR PAD, LOADING DOCKS, BOLLARDS, ETC.
5. PROPOSED BOUNDS AND ANY EXISTING PROPERTY LINE MONUMENTATION DISTURBED DURING CONSTRUCTION SHALL BE SET OR RESET BY A PROFESSIONAL LICENSED SURVEYOR.
6. PRIOR TO START OF CONSTRUCTION, CONTRACTOR SHALL VERIFY EXISTING PAVEMENT ELEVATIONS AT INTERFACE WITH PROPOSED PAVEMENTS, AND EXISTING GROUND ELEVATIONS ADJACENT TO DRAINAGE OUTLETS TO ASSURE PROPER TRANSITIONS BETWEEN EXISTING AND PROPOSED FACILITIES.
7. SYMBOLS AND LEGENDS OF PROJECT FEATURES ARE GRAPHIC REPRESENTATIONS AND ARE NOT NECESSARILY SCALED TO THEIR ACTUAL DIMENSIONS OR LOCATIONS ON THE DRAWINGS. THE CONTRACTOR SHALL REFER TO THE DETAIL SHEET DIMENSIONS, MANUFACTURERS' LITERATURE, SHOP DRAWINGS AND FIELD MEASUREMENTS OF SUPPLIED PRODUCTS FOR LAYOUT OF THE PROJECT FEATURES.
8. CONTRACTOR SHALL NOT RELY SOLELY ON ELECTRONIC VERSIONS OF PLANS, SPECIFICATIONS, AND DATA FILES THAT ARE OBTAINED FROM THE DESIGNERS, BUT SHALL VERIFY LOCATION OF PROJECT FEATURES IN ACCORDANCE WITH THE PAPER COPIES OF THE PLANS AND SPECIFICATIONS THAT ARE SUPPLIED AS PART OF THE CONTRACT DOCUMENTS.

Demolition

1. CONTRACTOR SHALL REMOVE AND DISPOSE OF EXISTING MANMADE SURFACE FEATURES WITHIN THE LIMIT OF WORK INCLUDING BUILDINGS, STRUCTURES, PAVEMENTS, SLABS, CURBING, FENCES, UTILITY POLES, SIGNS, ETC. UNLESS INDICATED OTHERWISE ON THE DRAWINGS. REMOVE AND DISPOSE OF EXISTING UTILITIES, FOUNDATIONS AND UNSUITABLE MATERIAL BENEATH AND FOR A DISTANCE OF 10 FEET BEYOND THE PROPOSED BUILDING FOOTPRINT INCLUDING EXTERIOR COLUMNS.
2. EXISTING UTILITIES SHALL BE TERMINATED, UNLESS OTHERWISE NOTED, IN CONFORMANCE WITH LOCAL, STATE AND INDIVIDUAL UTILITY COMPANY STANDARD SPECIFICATIONS AND DETAILS. THE CONTRACTOR SHALL COORDINATE UTILITY SERVICE DISCONNECTS WITH THE UTILITY REPRESENTATIVES.
3. CONTRACTOR SHALL DISPOSE OF DEMOLITION DEBRIS IN ACCORDANCE WITH APPLICABLE FEDERAL, STATE AND LOCAL REGULATIONS, ORDINANCES AND STATUTES.
4. THE DEMOLITION LIMITS DEPICTED IN THE PLANS IS INTENDED TO AID THE CONTRACTOR DURING THE BIDDING AND CONSTRUCTION PROCESS AND IS NOT INTENDED TO DEPICT EACH AND EVERY ELEMENT OF DEMOLITION. THE CONTRACTOR IS RESPONSIBLE FOR IDENTIFYING THE DETAILED SCOPE OF DEMOLITION BEFORE SUBMITTING ITS BID/PROPOSAL TO PERFORM THE WORK AND SHALL MAKE NO CLAIMS AND SEEK NO ADDITIONAL COMPENSATION FOR CHANGED CONDITIONS OR UNFORESEEN OR LATENT SITE CONDITIONS RELATED TO ANY CONDITIONS DISCOVERED DURING EXECUTION OF THE WORK.
5. UNLESS OTHERWISE SPECIFICALLY PROVIDED ON THE PLANS OR IN THE SPECIFICATIONS, THE ENGINEER HAS NOT PREPARED DESIGNS FOR AND SHALL HAVE NO RESPONSIBILITY FOR THE PRESENCE, DISCOVERY, REMOVAL, ABATEMENT OR DISPOSAL OF HAZARDOUS MATERIALS, TOXIC WASTES OR POLLUTANTS AT THE PROJECT SITE. THE ENGINEER SHALL NOT BE RESPONSIBLE FOR ANY CLAIMS OF LOSS, DAMAGE, EXPENSE, DELAY, INJURY OR DEATH ARISING FROM THE PRESENCE OF HAZARDOUS MATERIAL AND CONTRACTOR SHALL INDEMNIFY AND HOLD HARMLESS THE ENGINEER FROM ANY CLAIMS MADE IN CONNECTION THEREWITH. MOREOVER, THE ENGINEER SHALL HAVE NO ADMINISTRATIVE OBLIGATIONS OF ANY TYPE WITH REGARD TO ANY CONTRACTOR AMENDMENT INVOLVING THE ISSUES OF PRESENCE, DISCOVERY, REMOVAL, ABATEMENT OR DISPOSAL OF ASBESTOS OR OTHER HAZARDOUS MATERIALS.

Erosion Control

1. PRIOR TO STARTING ANY OTHER WORK ON THE SITE, THE CONTRACTOR SHALL NOTIFY APPROPRIATE AGENCIES AND SHALL INSTALL EROSION CONTROL MEASURES AS SHOWN ON THE PLANS AND AS IDENTIFIED IN FEDERAL, STATE, AND LOCAL APPROVAL DOCUMENTS PERTAINING TO THIS PROJECT.
2. CONTRACTOR SHALL INSPECT AND MAINTAIN EROSION CONTROL MEASURES, AND REMOVE SEDIMENT THEREFROM ON A WEEKLY BASIS AND WITHIN TWELVE HOURS AFTER EACH STORM EVENT AND DISPOSE OF SEDIMENTS IN AN UPLAND AREA SUCH THAT THEY DO NOT ENCUMBER OTHER DRAINAGE STRUCTURES AND PROTECTED AREAS.
3. CONTRACTOR SHALL BE FULLY RESPONSIBLE TO CONTROL CONSTRUCTION SUCH THAT SEDIMENTATION SHALL NOT AFFECT REGULATORY PROTECTED AREAS, WHETHER SUCH SEDIMENTATION IS CAUSED BY WATER, WIND, OR DIRECT DEPOSIT.
4. CONTRACTOR SHALL PERFORM CONSTRUCTION SEQUENCING SUCH THAT EARTH MATERIALS ARE EXPOSED FOR A MINIMUM OF TIME BEFORE THEY ARE COVERED, SEEDED, OR OTHERWISE STABILIZED TO PREVENT EROSION.
5. UPON COMPLETION OF CONSTRUCTION AND ESTABLISHMENT OF PERMANENT GROUND COVER, CONTRACTOR SHALL REMOVE AND DISPOSE OF EROSION CONTROL MEASURES AND CLEAN SEDIMENT AND DEBRIS FROM ENTIRE DRAINAGE AND SEWER SYSTEMS.

Existing Conditions Information

1. BASE PLAN: THE PROPERTY LINES SHOWN WERE DETERMINED BY AN ACTUAL FIELD SURVEY CONDUCTED BY MACCARTHY AND SULLIVAN ENGINEERING AND FROM PLANS OF RECORD. VHB HAS NOT PERFORMED A FIELD SURVEY TO VERIFY THE PROPERTY LINES, EASEMENT LINES OR OTHER LINES DEFINING OWNERSHIP OR RIGHTS OF USE AND THEREFORE DOES NOT ASSUME ANY RESPONSIBILITY FOR THEIR ACCURACY.
2. TOPOGRAPHY: ELEVATIONS ARE BASED ON NGVD 1929 DATUM.

Document Use

1. THESE PLANS AND CORRESPONDING CADD DOCUMENTS ARE INSTRUMENTS OF PROFESSIONAL SERVICE, AND SHALL NOT BE USED, IN WHOLE OR IN PART, FOR ANY PURPOSE OTHER THAN FOR WHICH IT WAS CREATED WITHOUT THE EXPRESSED, WRITTEN CONSENT OF VHB. ANY UNAUTHORIZED USE, REUSE, MODIFICATION OR ALTERATION, INCLUDING AUTOMATED CONVERSION OF THIS DOCUMENT SHALL BE AT THE USER'S SOLE RISK WITHOUT LIABILITY OR LEGAL EXPOSURE TO VHB.

VHB
Vanasse Hangen Brustlin, Inc.
Transportation
Land Development
Environmental Services
99 High Street
Boston, Massachusetts 02110
617.728.7777 • FAX 617.728.7782

FRAMINGHAM PLANNING BOARD
PLAN ENDORSEMENT

DATE OF ENDORSEMENT: _____

No.	Revision	Date	Apprvd.

Designed by SARR | Drawn by SARR | Checked by CYM
CAD checked by | Approved by
Scale NTS | Date December 17, 2013

Project Title
125 Penn

125 Pennsylvania Avenue
Framingham, Massachusetts
Issued for

Not Approved for Construction
Drawing Title
Legend and General Notes

COMMONWEALTH OF MASSACHUSETTS
CHIY. MAN
CIVIL
NO. 45441
REGISTERED PROFESSIONAL ENGINEER
12-17-13

Drawing Number
C-1
Sheet 1 of 13
Project Number
10734.01

10734.00-LG.DWG

Saved Tuesday, December 24, 2013 9:03:42 AM JALBANI Plotted Monday, January 06, 2014 12:47:44 PM Jackson, Mark

VHB
Vanasse Hangen Brustlin, Inc.
Transportation
Land Development
Environmental Services
99 High Street
Boston, Massachusetts 02110
617.728.7777 • FAX 617.728.7782

PARCEL IDENTIFICATION LEGEND

Parcel ID: 100 460.0 0008 00010
MAP 460 BLOCK 8 LOT 10

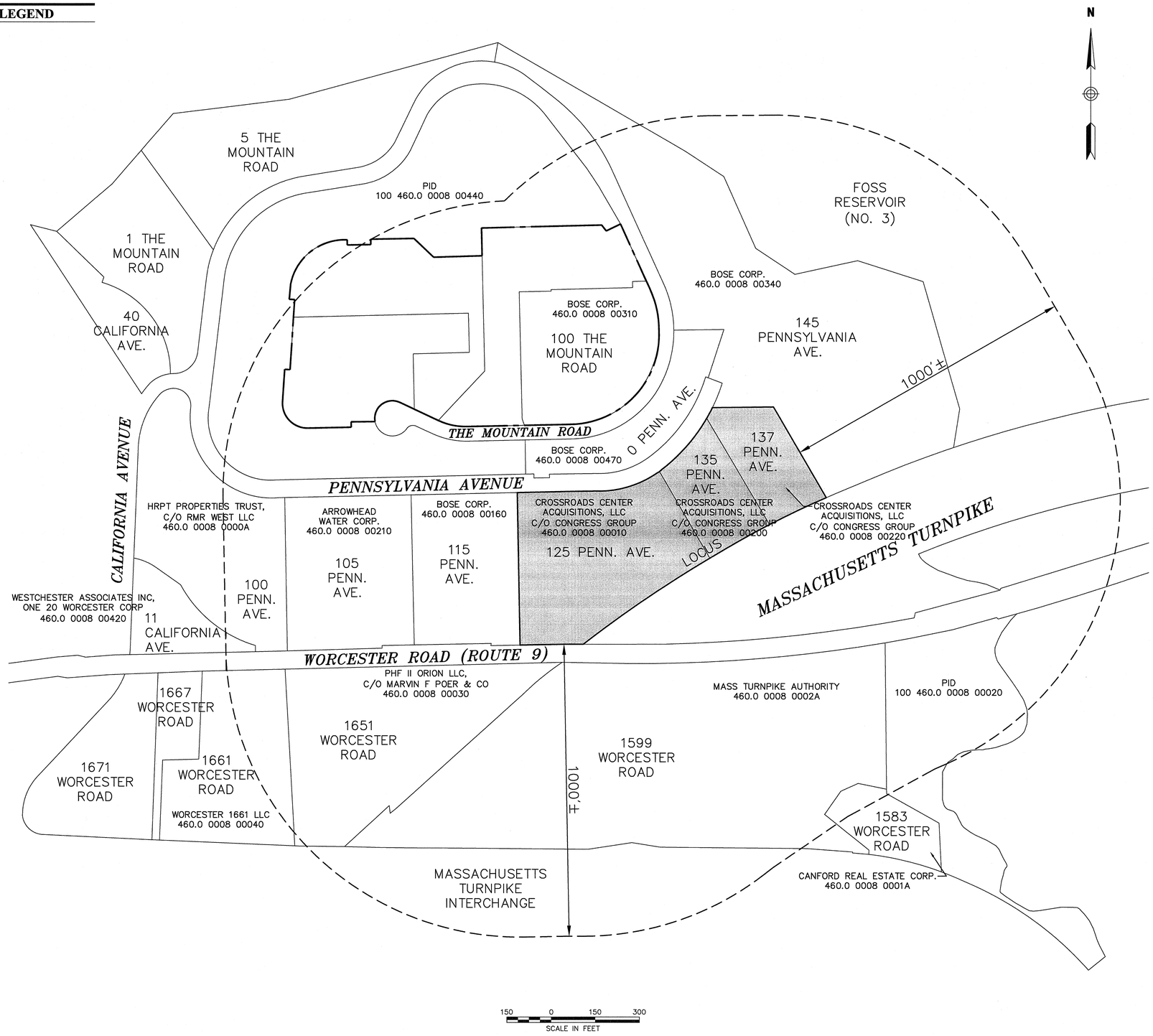

FRAMINGHAM PLANNING BOARD
PLAN ENDORSEMENT

DATE OF ENDORSEMENT: _____

No.	Revision	Date	Apvd.

Designed by JWP | Drawn by JAB | Checked by CYM
CAD checked by | Approved by
Scale 1"=150' | Date December 17, 2013

Project Title
125 Penn

125 Pennsylvania Avenue
Framingham, Massachusetts
Issued for

Not Approved for Construction
Drawing Title
Locus Plan

COMMONWEALTH OF MASSACHUSETTS
CHRY. MAN. CIVIL NO. 45441
REGISTERED PROFESSIONAL ENGINEER
12-17-13

Drawing Number
C-2
Sheet 2 of 13
Project Number
10734.01

10734.00-LP.DWG

Saved Friday, February 14, 2014 4:34:40 PM MJACKSON Plotted Tuesday, February 18, 2014 10:49:49 AM Jackson, Mark

ZONING TABLE

ZONE: TECHNOLOGY PARK
USE: OFFICE

	REQUIRED	EXISTING	PROPOSED
MIN. LOT AREA	43,560 S.F.	436,765 S.F.	436,765 S.F.
FRONTAGE	100 FEET	778 FEET	778 FEET
FRONT SETBACK	30 FEET	40.3 FEET	35.2 FEET
SIDE SETBACK	15 FEET	25 FEET	24.2 FEET
REAR SETBACK	NOT REQUIRED	15 FEET	102.6 FEET
MAX. BLDG. HEIGHT	6 STORY (100 FEET)	29 FEET	1 STORY (31 FEET)
FLOOR AREA RATIO (FAR)	0.4 (BASE)	0.26	0.22
LANDSCAPE OPEN SPACE	131,030 S.F.	204,329 S.F.	184,553 S.F.
LANDSCAPE SURFACE RATIO (LSR)	25%	47%	42%
OTHER OPEN SPACE	NOT REQUIRED	0 S.F.	4,910 S.F.
OPEN SPACE/ LOT AREA RATIO	NOT REQUIRED	0%	1.1%
LOT COVERAGE (BUILDINGS)	NOT REQUIRED	114,575 S.F.	84,200 S.F.
LOT AREAS/PERCENTAGES (BUILDINGS)	NOT REQUIRED	26%	20%
PAVED AREAS	NOT REQUIRED	117,861 S.F.	163,102 S.F.
PAVED AREAS/LOT AREA RATIO	NOT REQUIRED	27%	37%

NOTES:
1. BASE FAR AND 100 FOOT HEIGHT AS PER: AMENDMENTS TO ZONING BY-LAW FOR THE TOWN OF FRAMINGHAM ("THE "AMENDMENTS") ADOPTED AT THE ANNUAL TOWN MEETING ON APRIL 29, 2008.
2. MINIMUM LANDSCAPED OPEN SPACE IS 25% OF GROSS FLOOR AREA.
3. FLOOR AREA = 84,200 SF FIRST FLOOR + 14,000 SF MEZZANINE = 98,200 SF.
FAR = 98,200 / 436,765 SF.

LOADING SUMMARY

REQUIRED	PROVIDED	
3	2	(REQUESTING WAVIER)

PARKING SUMMARY

REQUIRED	PROVIDED	ACCESSIBLE PARKING SPACES (STANDARD + VAN) REQUIRED	ACCESSIBLE PARKING SPACES (STANDARD + VAN) PROVIDED	VAN ACCESSIBLE PARKING SPACES REQUIRED	VAN ACCESSIBLE PARKING SPACES PROVIDED
312	393	9	9	2	9

PARKING REQUIREMENTS

OFFICE:	68,740 S.F. / 250 S.F./1 SPACE =	275 SPACES
R&D:	29,460 S.F. / 800 S.F./1 SPACE =	37 SPACES
TOTAL:		312 SPACES

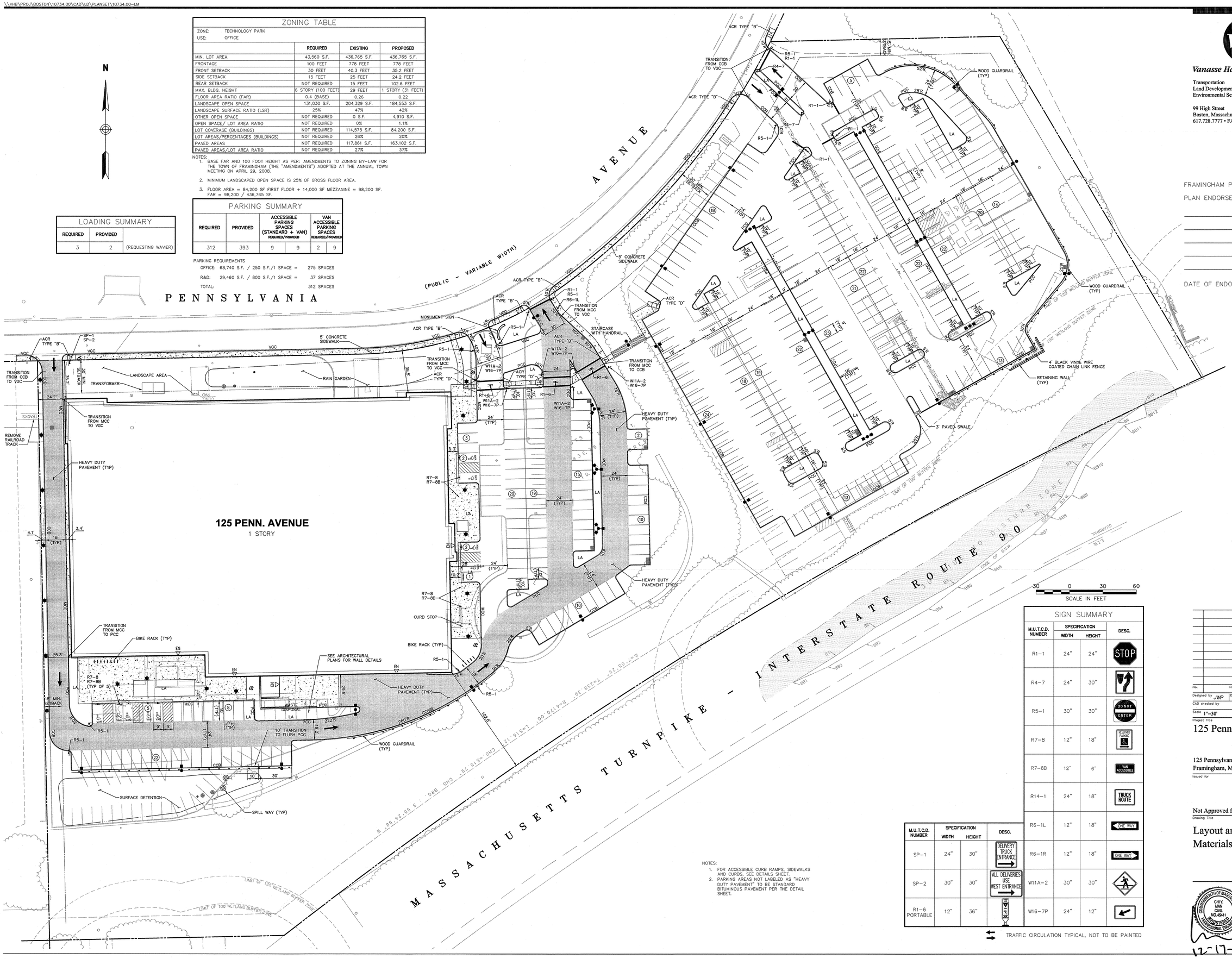

NOTES:
1. FOR ACCESSIBLE CURB RAMPS, SIDEWALKS AND CURBS, SEE DETAILS SHEET.
2. PARKING AREAS NOT LABELED AS "HEAVY DUTY PAVEMENT" TO BE STANDARD BITUMINOUS PAVEMENT PER THE DETAIL SHEET.

SIGN SUMMARY

M.U.T.C.D. NUMBER	SPECIFICATION WIDTH	SPECIFICATION HEIGHT	DESC.
R1-1	24"	24"	STOP
R4-7	24"	30"	
R5-1	30"	30"	DO NOT ENTER
R7-8	12"	18"	RESERVED PARKING
R7-8B	12"	6"	VAN ACCESSIBLE
R14-1	24"	18"	TRUCK ROUTE
R6-1L	12"	18"	ONE WAY
R6-1R	12"	18"	ONE WAY
W11A-2	30"	30"	
W16-7P	24"	12"	

M.U.T.C.D. NUMBER	SPECIFICATION WIDTH	SPECIFICATION HEIGHT	DESC.
SP-1	24"	30"	DELIVERY TRUCK ENTRANCE
SP-2	30"	30"	ALL DELIVERIES USE WEST ENTRANCE
R1-6 PORTABLE	12"	36"	

TRAFFIC CIRCULATION TYPICAL, NOT TO BE PAINTED

VHB
Vanasse Hangen Brustlin, Inc.
Transportation
Land Development
Environmental Services
99 High Street
Boston, Massachusetts 02110
617.728.7777 • FAX 617.728.7782

FRAMINGHAM PLANNING BOARD
PLAN ENDORSEMENT

DATE OF ENDORSEMENT: _____

No.	Revision	Date	Apprvd.

Designed by JWP | Drawn by MCJ | Checked by CYM
CAD checked by | Approved by
Scale 1"=30' | Date December 17, 2013

Project Title
125 Penn

125 Pennsylvania Avenue
Framingham, Massachusetts
Issued for

Not Approved for Construction
Drawing Title
Layout and Materials Plan

COMMONWEALTH OF MASSACHUSETTS
CHI Y. MAN
CIVIL
NO. 45441
REGISTERED PROFESSIONAL ENGINEER
12-17-13

Drawing Number
C-3
Sheet 3 of 13
Project Number
10734.01

10734.00-LM.DWG

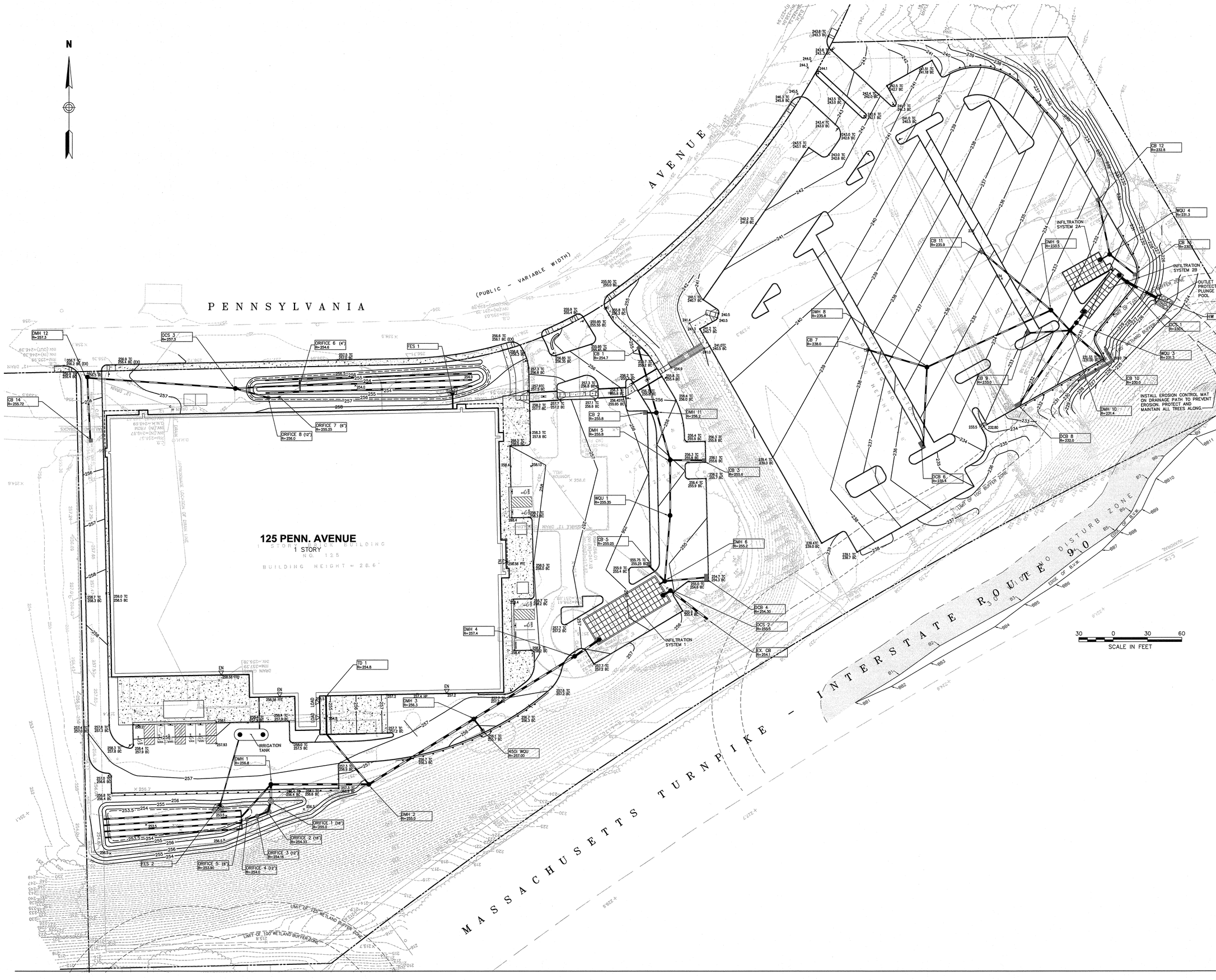

VHB
Vanasse Hangen Brustlin, Inc.
Transportation
Land Development
Environmental Services
99 High Street
Boston, Massachusetts 02110
617.728.7777 • FAX 617.728.7782

FRAMINGHAM PLANNING BOARD
PLAN ENDORSEMENT

DATE OF ENDORSEMENT: _____

No.	Revision	Date	Apprvd.

Designed by JWP	Drawn by JAB	Checked by CYM	
CAD checked by		Approved by	
Scale 1"=30'		Date December 17, 2013	

Project Title
125 Penn

125 Pennsylvania Avenue
Framingham, Massachusetts
Issued for

Not Approved for Construction
Drawing Title
Grading Plan

Drawing Number
C-4
Sheet 4 of 13
Project Number 10734.01

COMMONWEALTH OF MASSACHUSETTS
CHRY. MAN
CIVIL
NO. 45441
REGISTERED PROFESSIONAL ENGINEER
12-17-13

10734.00-GD.DWG

Saved Tuesday, December 24, 2013 9:20:21 AM JALBANI Plotted Monday, January 06, 2014 12:48:22 PM Jackson, Mark

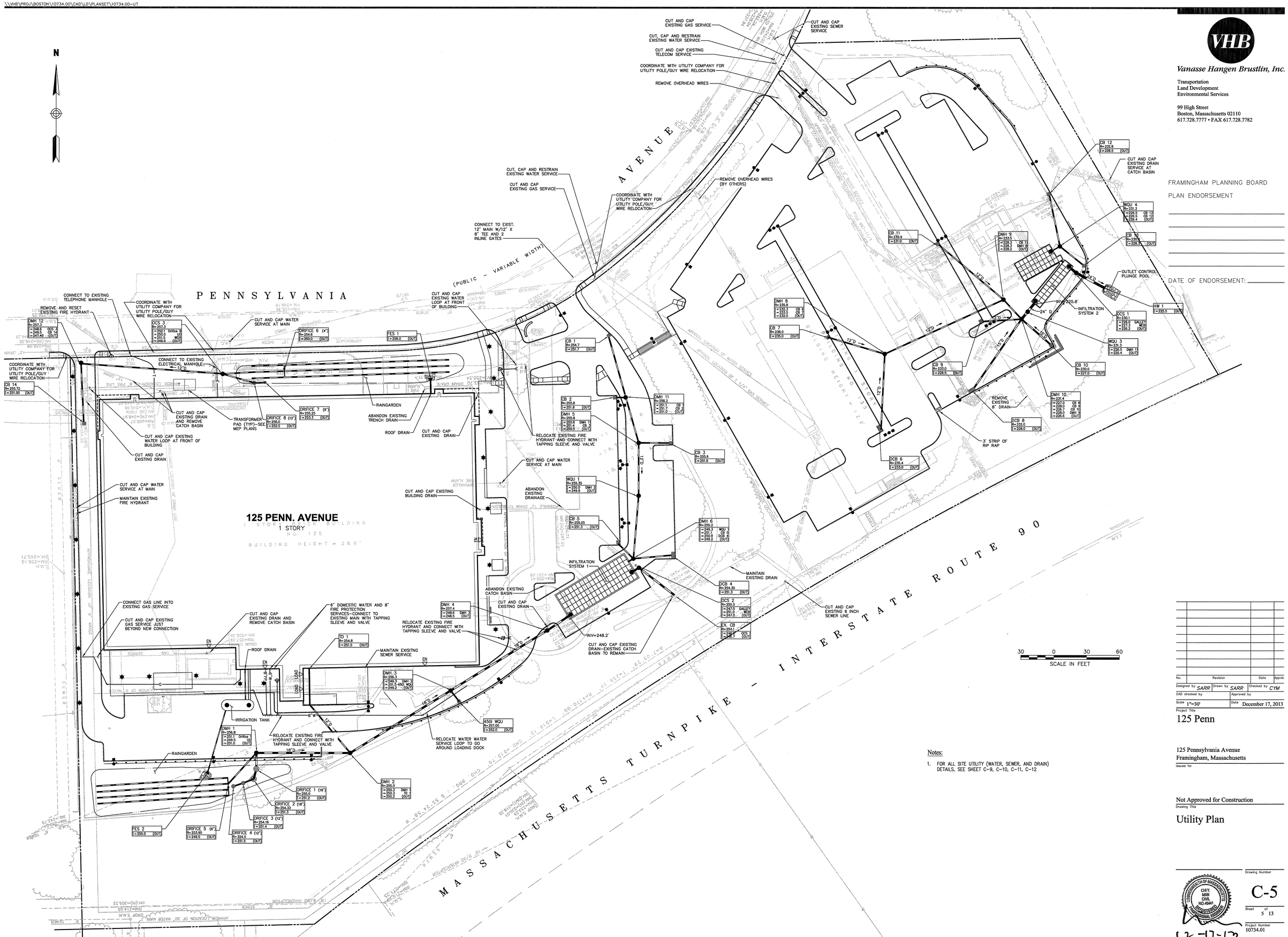

Notes:

1. FOR ALL SITE UTILITY (WATER, SEWER, AND DRAIN) DETAILS, SEE SHEET C-9, C-10, C-11, C-12

VHB
Vanasse Hangen Brustlin, Inc.
Transportation
Land Development
Environmental Services
99 High Street
Boston, Massachusetts 02110
617.728.7777 • FAX 617.728.7782

FRAMINGHAM PLANNING BOARD
PLAN ENDORSEMENT

DATE OF ENDORSEMENT:

No.	Revision	Date	Appvd.

Designed by SARR | Drawn by SARR | Checked by CYM
CAD checked by | Approved by
Scale 1"=30' | Date December 17, 2013

Project Title
125 Penn

125 Pennsylvania Avenue
Framingham, Massachusetts
Issued for

Not Approved for Construction
Drawing Title
Utility Plan

COMMONWEALTH OF MASSACHUSETTS CHRY MANN CIVIL NO.45441 REGISTERED PROFESSIONAL ENGINEER
12-17-13

Drawing Number
C-5
Sheet 5 of 13
Project Number
10734.01

10734.00-UT.DWG

\\VHB\PROJ\BOSTON\10734.00\CAD\LD\PLANSET\10734.00-ER
Saved Tuesday, December 24, 2013 9:24:38 AM JALBANI Plotted Monday, January 06, 2014 12:44:12 PM Jackson, Mark

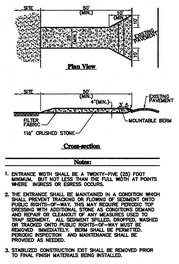

Notes:

1. ENTRANCE WIDTH SHALL BE A TWENTY-FIVE (25) FOOT MINIMUM, BUT NOT LESS THAN THE FULL WIDTH AT POINTS WHERE INGRESS OR EGRESS OCCURS.
2. THE ENTRANCE SHALL BE MAINTAINED IN A CONDITION WHICH SHALL PREVENT TRACKING OR FLOWING OF SEDIMENT ONTO PUBLIC RIGHTS-OF-WAY. THIS MAY REQUIRE PERIODIC TOP DRESSING WITH ADDITIONAL STONE AS CONDITIONS DEMAND AND REPAIR OR CLEANOUT OF ANY MEASURES USED TO TRAP SEDIMENT. ALL SEDIMENT SPILLED, DROPPED, WASHED OR TRACKED ONTO PUBLIC RIGHTS-OF-WAY MUST BE REMOVED IMMEDIATELY. ALL SPILLS, DROPS, WASHES AND PERIODIC INSPECTION AND MAINTENANCE SHALL BE PROVIDED AS NEEDED.
3. STABILIZED CONSTRUCTION EXIT SHALL BE REMOVED PRIOR TO FINAL FINISH MATERIALS BEING INSTALLED.

Stabilized Construction Exit 6/08
N.T.S. Source: VHB LD_.663

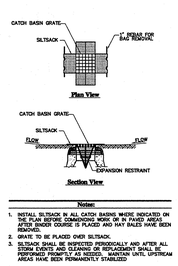

Notes:

1. INSTALL SILTSACK IN ALL CATCH BASINS WHERE INDICATED ON THE PLAN BEFORE COMMENCING WORK OR IN PAVED AREAS AFTER BINDER COURSE IS PLACED AND HAY BALES HAVE BEEN REMOVED.
2. SHAKE TO BE PLACED OVER SILTSACK.
3. SILTSACK SHALL BE INSPECTED PERIODICALLY AND AFTER ALL STORM EVENTS AND CLEANING OR REPLACEMENT SHALL BE PERFORMED PROMPTLY AS NEEDED. MAINTAIN UNTIL UPSTREAM AREAS HAVE BEEN PERMANENTLY STABILIZED

Siltsack Sediment Trap 6/08
N.T.S. Source: VHB LD_.674

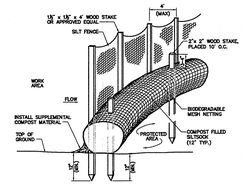

Notes:

1. SILTSOCK SHALL BE FILTREXX SILTSOXX, OR APPROVED EQUAL.
2. SILTSOCKS SHALL OVERLAP A MINIMUM OF 12 INCHES.
3. SILTSOCK SHALL BE INSPECTED PERIODICALLY AND AFTER ALL STORM EVENTS. CLEANING OR REPLACEMENT SHALL BE PERFORMED PROMPTLY AS NEEDED.
4. COMPOST MATERIAL SHALL BE DISPERSED ON SITE, AS DETERMINED BY THE ENGINEER.
5. IF NON BIODEGRADABLE NETTING IS USED THE MATTING SHALL BE COLLECTED AND DISPOSED OF OFFSITE.

Siltsock / Silt Fence Barrier 6/13
N.T.S. Source: VHB LD_.650-A

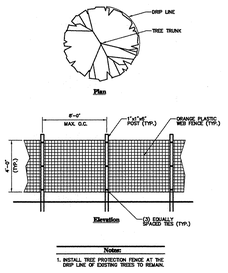

Notes:

1. INSTALL TREE PROTECTION FENCE AT THE DRIP LINE OF EXISTING TREES TO REMAIN.

Tree Protection Fence 6/08
N.T.S. Source: VHB LD_.810

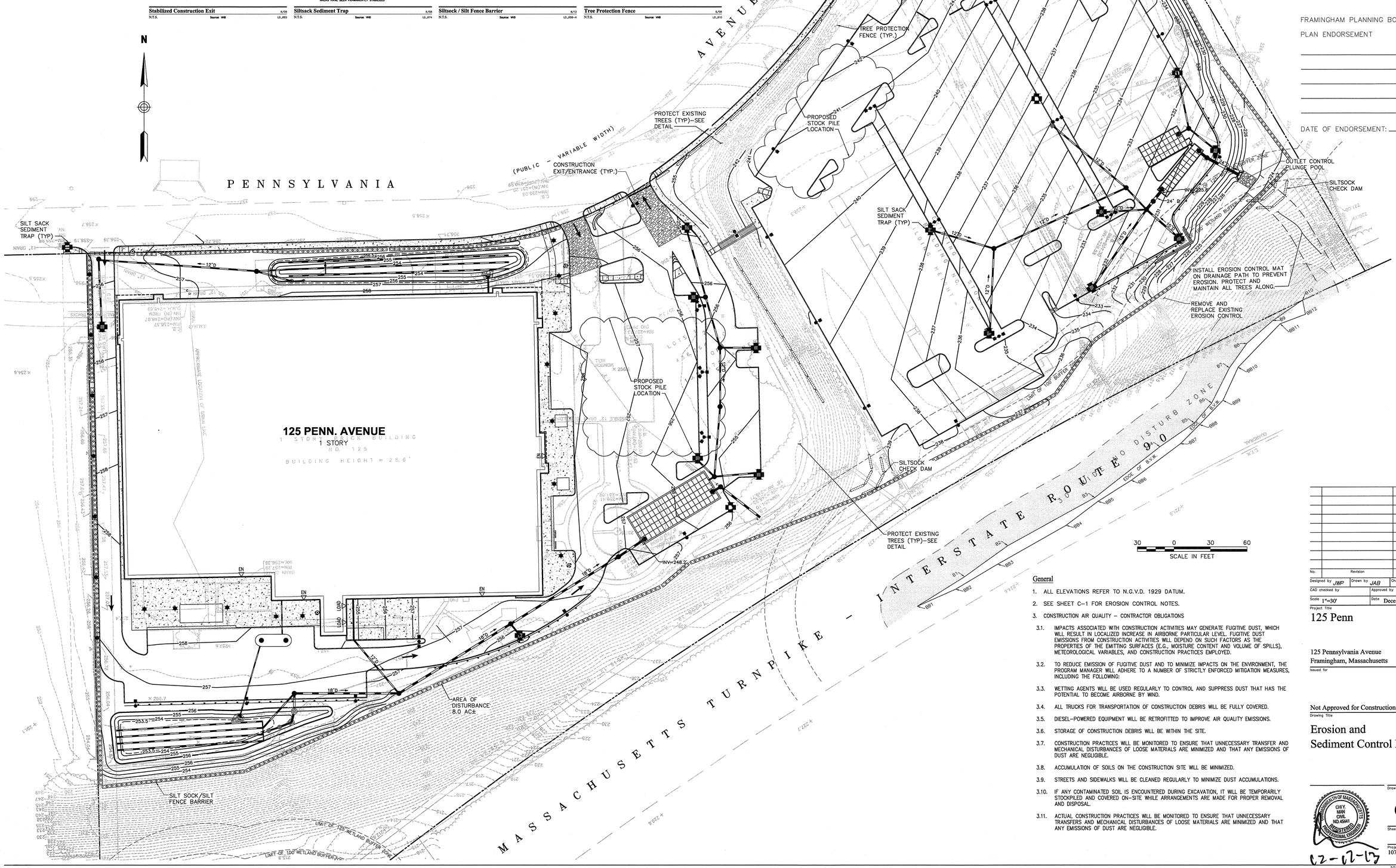

General

1. ALL ELEVATIONS REFER TO N.G.V.D. 1929 DATUM.
2. SEE SHEET C-1 FOR EROSION CONTROL NOTES.
3. CONSTRUCTION AIR QUALITY – CONTRACTOR OBLIGATIONS

3.1. IMPACTS ASSOCIATED WITH CONSTRUCTION ACTIVITIES MAY GENERATE FUGITIVE DUST, WHICH WILL RESULT IN LOCALIZED INCREASE IN AIRBORNE PARTICULAR LEVEL. FUGITIVE DUST EMISSIONS FROM CONSTRUCTION ACTIVITIES WILL DEPEND ON SUCH FACTORS AS THE PROPERTIES OF THE EMITTING SURFACES (E.G., MOISTURE CONTENT AND VOLUME OF SPILLS), METEOROLOGICAL VARIABLES, AND CONSTRUCTION PRACTICES EMPLOYED.

3.2. TO REDUCE EMISSION OF FUGITIVE DUST AND TO MINIMIZE IMPACTS ON THE ENVIRONMENT, THE PROGRAM MANAGER WILL ADHERE TO A NUMBER OF STRICTLY ENFORCED MITIGATION MEASURES, INCLUDING THE FOLLOWING:

3.3. WETTING AGENTS WILL BE USED REGULARLY TO CONTROL AND SUPPRESS DUST THAT HAS THE POTENTIAL TO BECOME AIRBORNE BY WIND.

3.4. ALL TRUCKS FOR TRANSPORTATION OF CONSTRUCTION DEBRIS WILL BE FULLY COVERED.

3.5. DIESEL-POWERED EQUIPMENT WILL BE RETROFITTED TO IMPROVE AIR QUALITY EMISSIONS.

3.6. STORAGE OF CONSTRUCTION DEBRIS WILL BE WITHIN THE SITE.

3.7. CONSTRUCTION PRACTICES WILL BE MONITORED TO ENSURE THAT UNNECESSARY TRANSFER AND MECHANICAL DISTURBANCES OF LOOSE MATERIALS ARE MINIMIZED AND THAT ANY EMISSIONS OF DUST ARE NEGLIGIBLE.

3.8. ACCUMULATION OF SOILS ON THE CONSTRUCTION SITE WILL BE MINIMIZED.

3.9. STREETS AND SIDEWALKS WILL BE CLEANED REGULARLY TO MINIMIZE DUST ACCUMULATIONS.

3.10. IF ANY CONTAMINATED SOIL IS ENCOUNTERED DURING EXCAVATION, IT WILL BE TEMPORARILY STOCKPILED AND COVERED ON-SITE WHILE ARRANGEMENTS ARE MADE FOR PROPER REMOVAL AND DISPOSAL.

3.11. ACTUAL CONSTRUCTION PRACTICES WILL BE MONITORED TO ENSURE THAT UNNECESSARY TRANSFERS AND MECHANICAL DISTURBANCES OF LOOSE MATERIALS ARE MINIMIZED AND THAT ANY EMISSIONS OF DUST ARE NEGLIGIBLE.

VHB
Vanasse Hangen Brustlin, Inc.
Transportation
Land Development
Environmental Services
99 High Street
Boston, Massachusetts 02110
617.728.7777 • FAX 617.728.7782

FRAMINGHAM PLANNING BOARD
PLAN ENDORSEMENT

DATE OF ENDORSEMENT: _____

No.	Revision	Date	Appvd.

Designed by JWP | Drawn by JAB | Checked by CYM
CAD checked by | Approved by
Scale 1"=30' | Date December 17, 2013

Project Title
125 Penn

125 Pennsylvania Avenue
Framingham, Massachusetts
Issued for

Not Approved for Construction

Drawing Title
Erosion and Sediment Control Plan

COMMONWEALTH OF MASSACHUSETTS
CHRY. MANN
CIVIL
NO. 45441
REGISTERED PROFESSIONAL ENGINEER
12-12-13

Drawing Number
C-6
Sheet 6 of 13
Project Number
10734.01

10734.00-ER.DWG

Saved Tuesday, December 24, 2013 9:27:04 AM JALBAN Plotted Monday, January 06, 2014 12:42:47 PM Jackson, Mark

VHB
Vanasse Hangen Brustlin, Inc.
Transportation
Land Development
Environmental Services
99 High Street
Boston, Massachusetts 02110
617.728.7777 • FAX 617.728.7782

FRAMINGHAM PLANNING BOARD
PLAN ENDORSEMENT

DATE OF ENDORSEMENT: _____

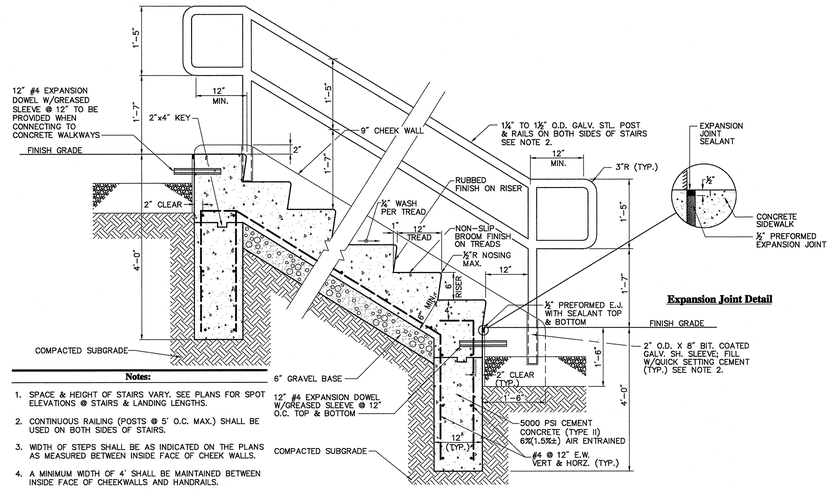

Expansion Joint Detail

Notes:

1. SPACE & HEIGHT OF STAIRS VARY. SEE PLANS FOR SPOT ELEVATIONS @ STAIRS & LANDING LENGTHS.
2. CONTINUOUS RAILING (POSTS @ 5' O.C. MAX.) SHALL BE USED ON BOTH SIDES OF STAIRS.
3. WIDTH OF STEPS SHALL BE AS INDICATED ON THE PLANS AS MEASURED BETWEEN INSIDE FACE OF CHEEK WALLS.
4. A MINIMUM WIDTH OF 4' SHALL BE MAINTAINED BETWEEN INSIDE FACE OF CHEEKWALLS AND HANDRAILS.

Concrete Steps with Handrail

7/13 v1998

N.T.S. Source: VHB LD_765-v1998

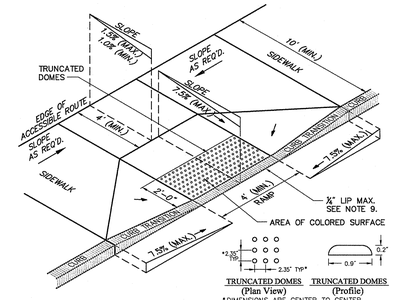

Notes:

1. THE MAXIMUM ALLOWABLE SIDEWALK AND CURB RAMP CROSS SLOPES SHALL BE 1.5 (1% MIN.).
2. THE MAXIMUM ALLOWABLE SLOPE OF ACCESSIBLE ROUTE EXCLUDING CURB RAMPS SHALL BE 5%.
3. THE MAXIMUM ALLOWABLE SLOPE OF ACCESSIBLE ROUTE AT CURB RAMPS SHALL BE 7.5%.
4. A MINIMUM OF 3 FEET CLEAR SHALL BE MAINTAINED AT ANY PERMANENT OBSTACLE IN ACCESSIBLE ROUTE (I.E., HYDRANTS, UTILITY POLES, TREE WELLS, SIGNS, ETC.).
5. CURB TREATMENT VARIES, SEE PLANS FOR CURB TYPE.
6. RAMP, CURB, AND ADJACENT PAVEMENTS SHALL BE GRADED TO PREVENT PONDING.
7. TYPICAL SIDEWALK SECTION FOR RAMP SECTION CONSTRUCTION.
8. WHERE ACCESSIBLE ROUTES ARE LESS THAN 5' IN WIDTH (EXCLUDING CURBING) A 5' x 5' PASSING AREA SHALL BE PROVIDED AT INTERVALS NOT TO EXCEED 200 FEET.
9. ELIMINATE CURBING AT RAMP WHERE IT ABUTS ROADWAY, EXCEPT WHERE VERTICAL CURBING IS INDICATED ON THE DRAWINGS TO BE SET FLUSH.
10. DETECTABLE WARNINGS SHALL CONTRAST VISUALLY WITH ADJOINING SURFACES.
11. DETECTABLE WARNINGS SHALL BE INSTALLED PERPENDICULAR TO THE ACCESSIBLE ROUTE.

Accessible Curb Ramp (ACR) Type 'D-D'

11/10

N.T.S. Source: VHB LD_503

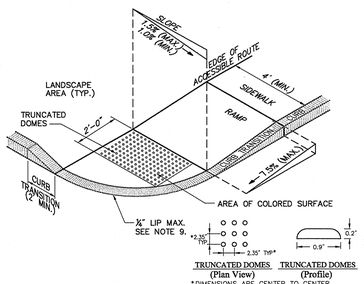

Notes:

1. THE MAXIMUM ALLOWABLE SIDEWALK AND CURB RAMP CROSS SLOPES SHALL BE 1.5 (1% MIN.).
2. THE MAXIMUM ALLOWABLE SLOPE OF ACCESSIBLE ROUTE EXCLUDING CURB RAMPS SHALL BE 5%.
3. THE MAXIMUM ALLOWABLE SLOPE OF ACCESSIBLE ROUTE AT CURB RAMPS SHALL BE 7.5%.
4. A MINIMUM OF 3 FEET CLEAR SHALL BE MAINTAINED AT ANY PERMANENT OBSTACLE IN ACCESSIBLE ROUTE (I.E., HYDRANTS, UTILITY POLES, TREE WELLS, SIGNS, ETC.).
5. CURB TREATMENT VARIES, SEE PLANS FOR CURB TYPE.
6. RAMP, CURB AND ADJACENT PAVEMENTS SHALL BE GRADED TO PREVENT PONDING.
7. SEE TYPICAL SIDEWALK SECTION FOR RAMP CONSTRUCTION.
8. WHERE ACCESSIBLE ROUTES ARE LESS THAN 5' IN WIDTH (EXCLUDING CURBING) A 5' x 5' PASSING AREA SHALL BE PROVIDED AT INTERVALS NOT TO EXCEED 200 FEET.
9. ELIMINATE CURBING AT RAMP WHERE IT ABUTS ROADWAY, EXCEPT WHERE VERTICAL CURBING IS INDICATED ON THE DRAWINGS TO BE INSTALLED AND SET FLUSH.
10. DETECTABLE WARNINGS SHALL CONTRAST VISUALLY WITH ADJOINING SURFACES.
11. DETECTABLE WARNINGS SHALL BE INSTALLED PERPENDICULAR TO THE ACCESSIBLE ROUTE.
12. CONTRACTOR TO SUBMIT R.F.I. FOR THIS TYPE OF ACCESSIBLE CURB RAMP FOR APEX ROADWAY CROSSINGS.

Accessible Curb Ramp (ACR) - Type 'B-D'

9/13

N.T.S. Source: VHB LD_501

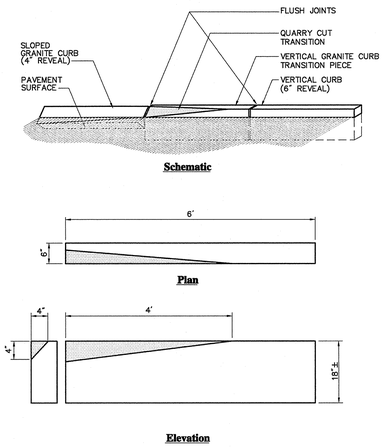

Vertical Granite Curb (VGC) Transition

6/08

N.T.S. Source: VHB LD_415

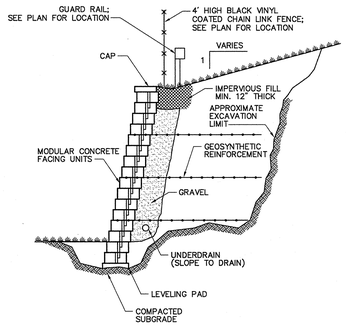

Note:

DETAIL PROVIDED FOR GENERAL INFORMATION ONLY. STAMPED FINAL DESIGN OF MODULAR WALL SYSTEM TO BE PROVIDED BY WALL MANUFACTURER BASED ON GEOTECHNICAL ENGINEERS RECOMMENDATIONS.

Modular Retaining Wall

6/08

N.T.S. Source: VHB REV LD_750

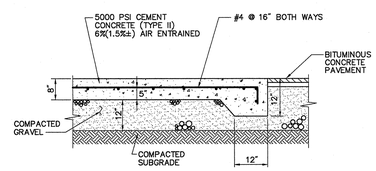

Notes:

1. SIZE OF PAD TO BE AS INDICATED ON PLANS.
2. CONSTRUCTION JOINTS SHALL BE SPACED NO MORE THAN 30 FEET ON CENTER AND SHALL BE EQUALLY SPACED OVER THE LENGTH AND WIDTH OF THE PAD.

Loading Dock Pad

4/11

N.T.S. Source: VHB LD_711

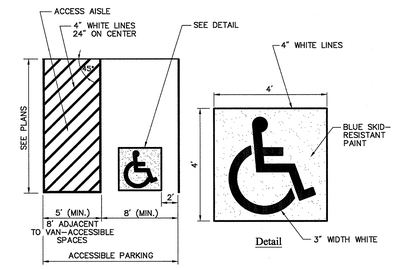

Notes:

1. ALL DIMENSIONS TO EDGES OF 4" PAVEMENT STRIPING.
2. ALL STRIPING SHALL BE 4" WIDE SOLID WHITE PAVEMENT MARKINGS UNLESS OTHERWISE NOTED.
3. 8' STALL WIDTH REFERS TO 8' CLEAR BETWEEN INSIDE EDGES OF PAVEMENT MARKINGS.
4. ALL SLOPES THROUGHOUT THE ACCESSIBLE PARKING AND AISLE AREAS SHALL NOT EXCEED 1.5%.

Accessible Parking Space

4/09

N.T.S. Source: VHB LD_552

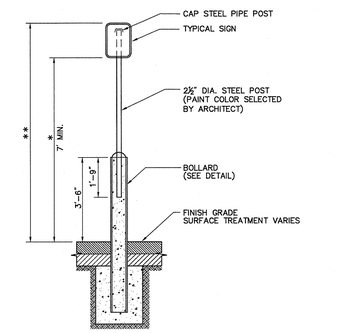

* THIS DIMENSION SHALL BE A MINIMUM OF 5' FOR ACCESSIBLE SIGNAGE.
** THIS DIMENSION SHALL BE A A MAXIMUM OF 8' FOR ACCESSIBLE SIGNAGE.

Bollard Mounted Sign

4/12

N.T.S. Source: VHB LD_703

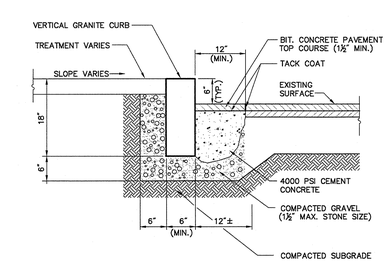

Vertical Granite Curb (VGC) Set In Existing Pavement

12/11

N.T.S. Source: VHB LD_403

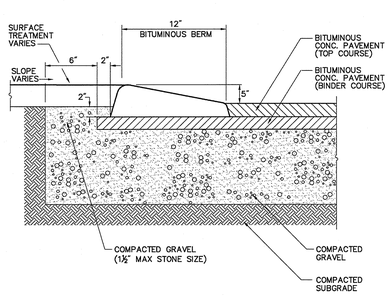

Note:

ALL CURBING TO BE MACHINE EXTRUDED

Cape Cod Berm (CCB)

6/08

N.T.S. Source: VHB REV LD_407

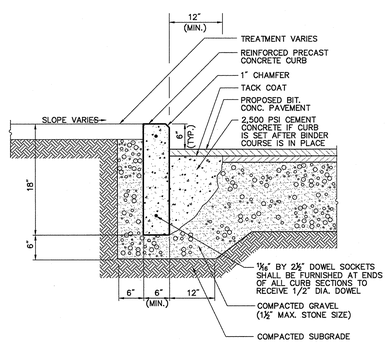

Precast Concrete Curb (PCC)

6/03

N.T.S. Source: VHB LD_404

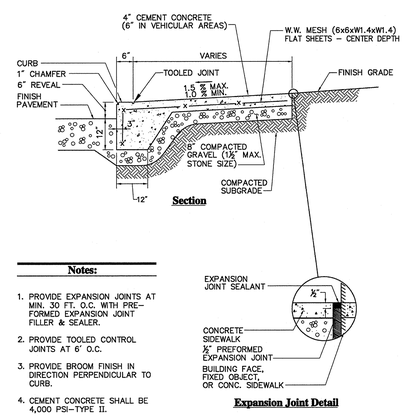

Notes:

1. PROVIDE EXPANSION JOINTS AT MIN. 30 FT. O.C. WITH PRE-FORMED EXPANSION JOINT FILLER & SEALER.
2. PROVIDE TOOLED CONTROL JOINTS AT 6' O.C.
3. PROVIDE BROOM FINISH IN DIRECTION PERPENDICULAR TO CURB.
4. CEMENT CONCRETE SHALL BE 4,000 PSI-TYPE II.

Monolithic Concrete Curb (MCC) & Sidewalk

6/03

N.T.S. Source: VHB LD_421

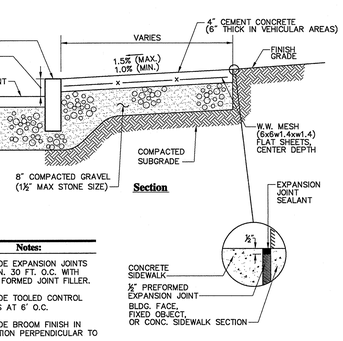

Notes:

1. PROVIDE EXPANSION JOINTS AT MIN. 30 FT. O.C. WITH PRE- FORMED JOINT FILLER.
2. PROVIDE TOOLED CONTROL JOINTS AT 6' O.C.
3. PROVIDE BROOM FINISH IN DIRECTION PERPENDICULAR TO CURB.
4. CEMENT CONCRETE SHALL BE 4000 PSI-TYPE II

Concrete Sidewalk

6/03

N.T.S. Source: VHB REV LD_420

No.	Revision	Date	Appvd.

Designed by JWP | Drawn by JAB | Checked by CYM
CAD checked by | Approved by
Scale NTS | Date December 17, 2013

Project Title
125 Penn

125 Pennsylvania Avenue
Framingham, Massachusetts

Issued for
Not Approved for Construction

Drawing Title
Details

COMMONWEALTH OF MASSACHUSETTS CHI Y. MAN CIVIL NO.45441 REGISTERED PROFESSIONAL ENGINEER
12-12-13

Drawing Number
C-7

Sheet 7 of 13

Project Number
10734.01

10734.00-DT.DWG

Saved Tuesday, December 24, 2013 9:27:04 AM JALBANI Plotted Monday, January 06, 2014 12:42:14 PM Jackson, Mark

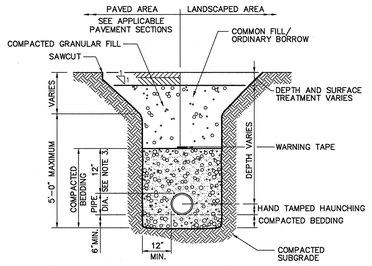

Notes:

1. WHERE UTILITY TRENCHES ARE CONSTRUCTED THROUGH DETENTION BASIN BERMS OR OTHER SUCH SPECIAL SECTIONS, PLACE TRENCH BACKFILL WITH MATERIALS SIMILAR TO THE SPECIAL SECTION REQUIREMENTS.
2. USE METALLIC TRACING/WARNING TAPE OVER ALL PIPES.
3. FOR HDPE PIPE, DIMENSION IS 24 INCHES.
4. ALL TRENCHING LIMITS SHALL BE RESTORED WITH TEMPORARY PAVEMENT CONSISTING OF 2½" BINDER COURSE AND 1½" SURFACE COURSE.
5. AFTER FOUR MONTHS OF TEMPORARY PAVEMENT INSTALLATION, THE TRENCH LIMIT SHALL BE RESTORED WITH 1½" MILL AND OVERLAY.

Utility Trench

6/08

N.T.S. Source: VHB REV LD_300

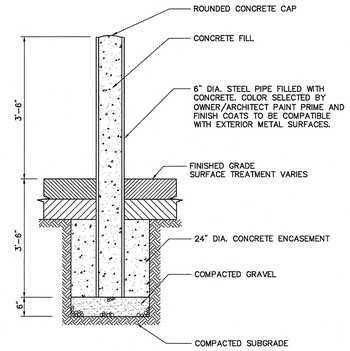

Note:

1. BOLLARDS TO BE INSTALLED TO PROTECT MECHANICAL AND ELECTRICAL EQUIPMENT PER UTILITY COMPANIES REQUIREMENTS

Bollard For Equipment Protection

6/03

N.T.S. Source: VHB REV LD_700

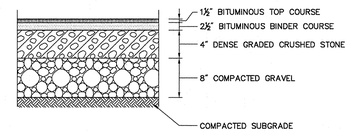

Heavy Duty Flexible Pavement

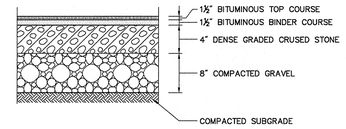

Standard Duty Flexible Pavement

Note:

1. PAVEMENT SECTIONS ARE SUBJECT TO CHANGE AND WILL BE BASED ON THE RESULTS OF FURTHER GEOTECHNICAL INVESTIGATIONS.
2. ALL PAVEMENT SHALL BE HEAVY DUTY UNLESS OTHERWISE INDICATED ON PLANS

Bituminous Concrete Pavement Sections

6/09

N.T.S. Source: VHB REV LD_430

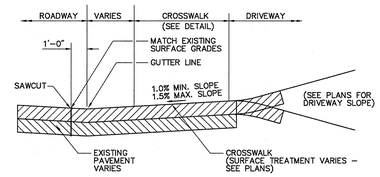

Section A-A

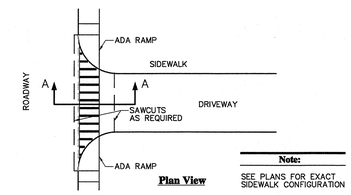

Plan View

Note:

SEE PLANS FOR EXACT SIDEWALK CONFIGURATION

Driveway Entrance/Crosswalk Section Detail

6/08

N.T.S. Source: VHB LD_423

VHB
Vanasse Hangen Brustlin, Inc.
Transportation
Land Development
Environmental Services
99 High Street
Boston, Massachusetts 02110
617.728.7777 • FAX 617.728.7782

FRAMINGHAM PLANNING BOARD

PLAN ENDORSEMENT

DATE OF ENDORSEMENT: _____

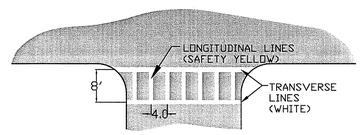

NOTES:

1. CROSSWALK MARKINGS SHALL CONSIST OF SOLID WHITE OR YELLOW (AS INDICATED) LINES (BOTH TRANSVERSE AND LONGITUDINAL) 12 INCHES IN WIDTH.
2. CROSSWALKS SHALL BE 8 FEET WIDE.
3. LONGITUDINAL LINES SHALL BE SPACED 48" APART ON CENTER FOR NEW ROADWAYS, 24" APART ON CENTER FOR EXISTING ROADWAYS.
4. CROSSWALK LINES SHALL EXTEND ACROSS THE FULL WIDTH OF PAVEMENT OR TO THE EDGE OF THE INTERSECTING CROSSWALK.
5. CROSSWALKS SHALL BE MARKED AT ALL INTERSECTIONS WHERE THERE IS SUBSTANTIAL CONFLICT BETWEEN VEHICULAR AND PEDESTRIAN MOVEMENT.
6. CROSSWALK MARKINGS FOR NEW ROADWAYS SHALL BE INSTALLED USING THERMOPLASTIC PAVING MARKING MATERIAL TO MEET MHD SPECIFICATIONS M07.01.03 (WHITE) AND M07.01.04 (YELLOW).
7. CROSSWALK MARKINGS FOR EXISTING ROADWAYS SHALL BE INSTALLED USING FAST DRYING WATER-BORNE TRAFFIC PAINT PAVING MARKING MATERIAL TO MEET MHD SPECIFICATIONS M07.01.23 (WHITE) AND M07.01.24 (YELLOW).

Crosswalk (Public Right-of-Way)

9/2008

N.T.S. Source: Framingham D.P.W. R-5.4.0

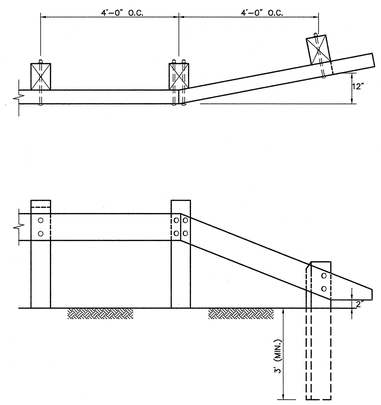

Wood Guardrail - Tapered End

6/08

N.T.S. Source: VHB LD_451

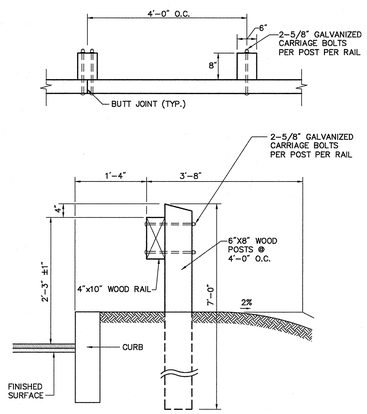

Wood Guardrail

6/08

N.T.S. Source: VHB LD_450

NOTE:

SEE STRUCTURAL PLANS FOR STRUCTURAL AND FOUNDATION DETAILS.

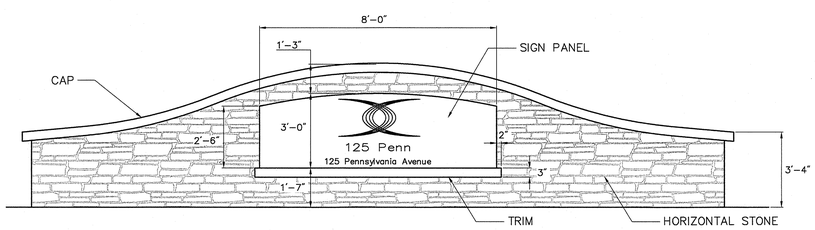

Stone Sign Wall Elevation

6/09

N.T.S. REV Source: VHB LD_

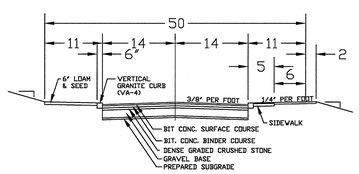

BITUMINOUS CONCRETE PAVEMENT SCHEDULE			
MINIMUM THICKNESS (INCH)	SUBDIVISION	COLLECTOR	ARTERIAL
SURFACE COURSE	1.5	2	3
BINDER COURSE	2.5	4	5
DENSE GRADED CRUSHED STONE	4	4	4
GRAVEL BASE	8	8	8
PREPARED SUBGRADE	-	4	4

Roadway Cross Section (Public Right of Way)

9/2008

N.T.S. Source: Framingham D.P.W. R-5.1.0

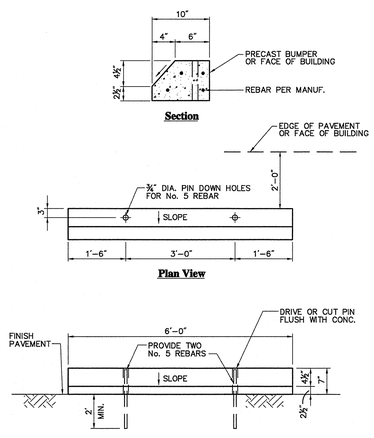

Concrete Bumper

6/08

N.T.S. Source: VHB LD_417

No.	Revision	Date	Appvd.

Designed by JWP | Drawn by JAB | Checked by CYM

CAD checked by | Approved by

Scale NTS | Date December 17, 2013

Project Title

125 Penn

125 Pennsylvania Avenue
Framingham, Massachusetts

Issued for

Not Approved for Construction

Drawing Title

Details

COMMONWEALTH OF MASSACHUSETTS CHI Y. MAN CIVIL NO. 45441 REGISTERED PROFESSIONAL ENGINEER

12-17-13

Drawing Number

C-8

Sheet 8 of 13

Project Number 10734.01

10734.00-DT.DWG

Saved Tuesday, December 24, 2013 9:27:04 AM JALBANI Plotted Monday, January 06, 2014 12:42:00 PM Jackson, Mark

SCHEDULE OF TIE RODS		
PIPE SIZE	NUMBER OF RODS PER FITTING	DIAMETER OF RODS
4" - 12"	2	3/4"
16"	4	3/4"
20" - 24"	4	1 1/8"

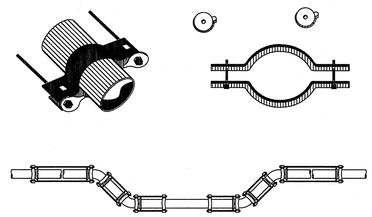

Typical Thrust Restraints Using Tie Rods and Friction Clamps 6/08

N.T.S. Source: VHB W-2.2.1

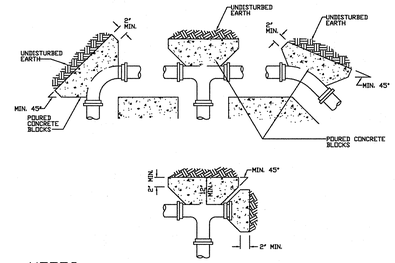

NOTES:

1. SPECIFIC THRUST BLOCK DESIGN SHALL CONFORM TO AWWA GUIDELINES.
2. PLACE 4 mil. POLYETHYLENE BETWEEN CONCRETE AND FITTING (CONCRETE SHALL NOT INTERFERE WITH JOINT).
3. MINIMUM CONCRETE THICKNESS SHALL BE 12 INCHES.
4. THRUST BLOCK ORIENTATION SHALL BE SUCH THAT THE CENTER OF THE FITTING CORRESPONDS WITH THE CENTER OF THE THRUST BLOCK.
5. THE MINIMUM ALLOWABLE ANGLE (EITHER VERTICAL OR HORIZONTAL) SHALL BE 45 DEGREES.

PLAN VIEWS

Typical Thrust Block Detail 9/2008

N.T.S. Source: Framingham D.P.W. W-2.2.2

Table Of Dimensions

BENDS	B	C	D	E	F	BENDS	B	C	D	E	F
6" 11 1/4°	8"	15"	12"	24"	12"	6" 45°	8"	30"	12"	24"	14"
6" 22 1/2°	-	19"	-	-	13"	6" 90°	-	30"	-	-	27"
8" 11 1/4°	-	20"	-	-	12"	8" 45°	-	30"	-	-	24"
8" 22 1/2°	-	22"	-	-	17"	8" 90°	-	38"	-	-	36"
12" 11 1/4°	-	30"	-	-	15"	12" 45°	-	40"	-	-	40"
12" 22 1/2°	-	35"	-	-	25"	12" 90°	-	60"	-	-	52"

Bends

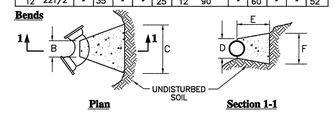

Plan Section 1-1

Table Of Dimensions

TEES	G	H	I	J	TEES	G	H	I	J
6"x 6"x 6"	12"	24"	24"	18"	12"x 12"x 6"	12"	24"	24"	18"
8"x 8"x 6"	-	-	-	-	12"x 12"x 8"	-	-	-	24"
8"x 8"x 8"	-	-	-	24"	12"x 12"x 12"	-	36"	-	36"

Tees

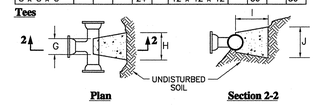

Plan Section 2-2

Notes:

1. PROVIDE BLOCKS FOR TAPPING SLEEVES, DEAD ENDS, GATE VALVES, AND VERTICAL BENDS (SAME SIZE AS REQUIRED FOR TEES). PROVIDE ANCHOR RODS AT VERTICAL BENDS AND GATE VALVES.
2. CONCRETE SHALL NOT BE PLACED AGAINST PIPE BEYOND FITTING.
3. CONCRETE SHALL BE 3000 PSI-TYPE I.

Concrete Thrust Block 6/08

N.T.S. Source: VHB LD_260

VHB
Vanasse Hangen Brustlin, Inc.
Transportation
Land Development
Environmental Services
99 High Street
Boston, Massachusetts 02110
617.728.7777 • FAX 617.728.7782

FRAMINGHAM PLANNING BOARD

PLAN ENDORSEMENT

DATE OF ENDORSEMENT: _____

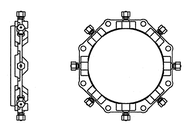

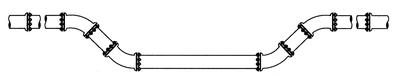

NOTES:

1. DEVICES NEED TO BE PLACED BEYOND THE AREA OF RESTRAINTS IN ACCORDANCE WITH MANUFACTURES RECOMMENDATIONS.

Typical Thrust Restraint Wedge Action Type Joints 9/2008

N.T.S. Source: Framingham D.P.W. W-2.2.0

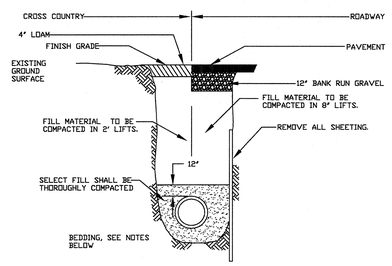

NOTE: 5'-0" MIN. COVER

Water Main Trench Detail 9/2008

N.T.S. Source: Framingham D.P.W. W-2.3.0

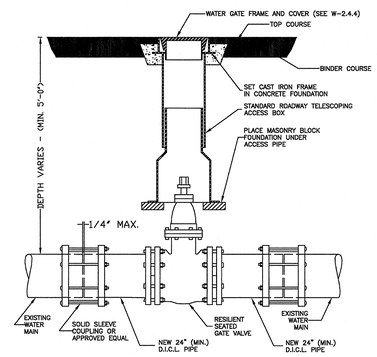

Gate Valve 9/2008

N.T.S. Source: Framingham D.P.W. W-2.4.0

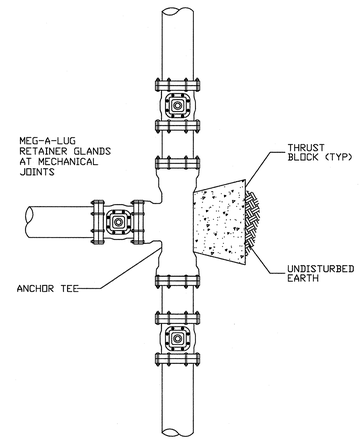

Typical Anchor Tee Installation 9/2008

N.T.S. Source: Framingham D.P.W. W-2.4.1

No.	Revision	Date	Approv.

Designed by JWP | Drawn by JAB | Checked by CYM
CAD checked by | Approved by
Scale NTS | Date December 17, 2013

Project Title
125 Penn

125 Pennsylvania Avenue
Framingham, Massachusetts

Issued for

Not Approved for Construction

Drawing Title
Details

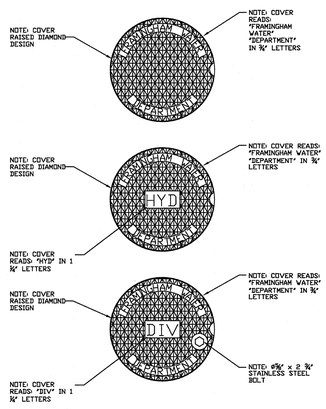

Water Gate Cover 9/2008

N.T.S. Source: Framingham D.P.W. W-2.4.4

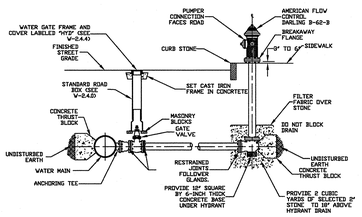

Fire Hydrant Installation 9/2008

N.T.S. Source: Framingham D.P.W. W-2.5.0

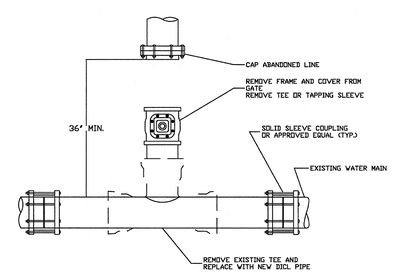

NOTES:

1. ALL WORK MUST BE PERFORMED BY A FRAMINGHAM LICENSED AND BONDED CONTRACTOR.
2. THIS PROCEDURE WILL INVOLVE A MAIN LINE SHUT DOWN THAT THE CONTRACTOR WILL COORDINATE WITH FRAMINGHAM'S D.P.W. OPERATIONS DIVISION.
3. WRITTEN NOTIFICATION OF ALL AFFECTED CUSTOMERS MUST BE PERFORMED BY THE CONTRACTOR.
4. ALL WORK MUST BE PERMITTED BY FRAMINGHAM AND ALL OTHER APPROPRIATE AGENCIES.
5. ALL WORK MUST BE INSPECTED BY FRAMINGHAM INSPECTOR OR DESIGNEE PRIOR TO BACKFILLING.

Detail of Cut and Remove of Water Connection 4" and Over 9/2008

N.T.S. Source: Framingham D.P.W. W-2.7.0

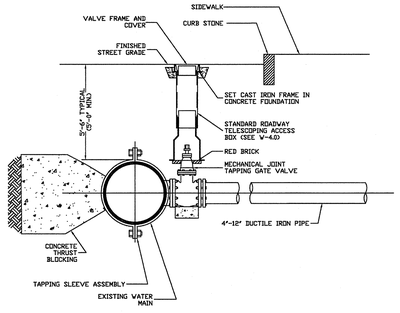

Typical Connection (Tapping Sleeve) 9/2008

N.T.S. Source: Framingham D.P.W. W-2.1.2

COMMONWEALTH OF MASSACHUSETTS
CHY. MAN
CIVIL
NO. 45441
PROFESSIONAL ENGINEER

12-17-13

Drawing Number
C-9

Sheet 9 of 13

Project Number
10734.01

Saved Tuesday, December 24, 2013 9:27:04 AM JALBANI Plotted Monday, January 06, 2014 12:41:43 PM Jackson, Mark

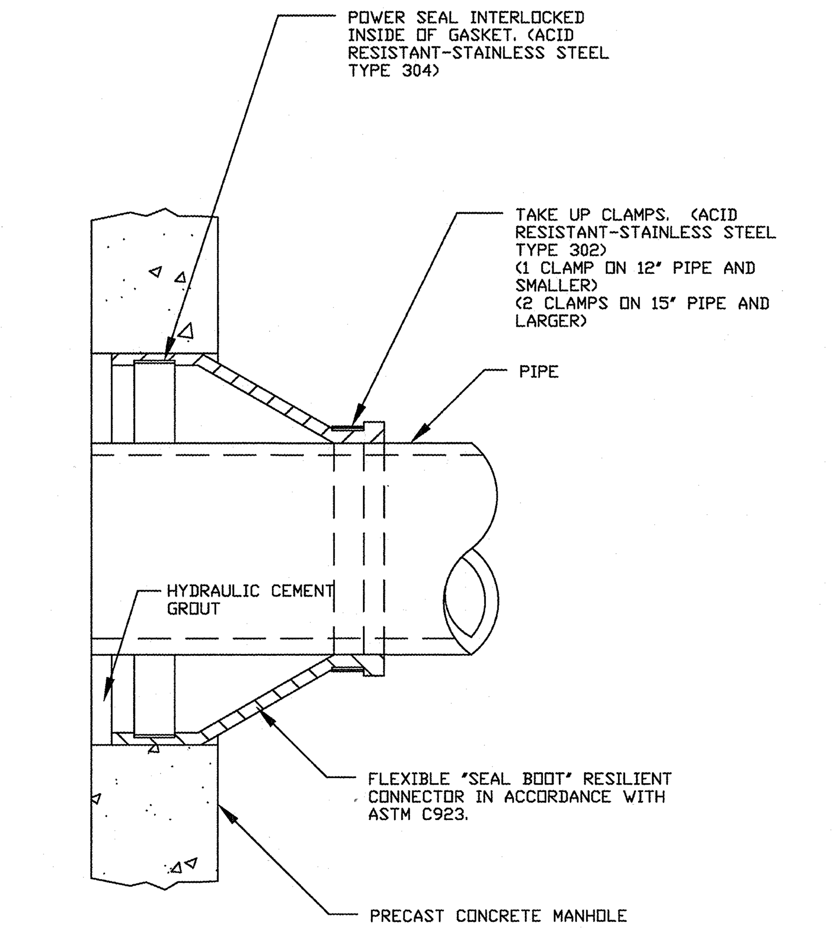

Manhole Seal 9/2008

N.T.S. Source: Framingham D.P.W. W-3.4.4

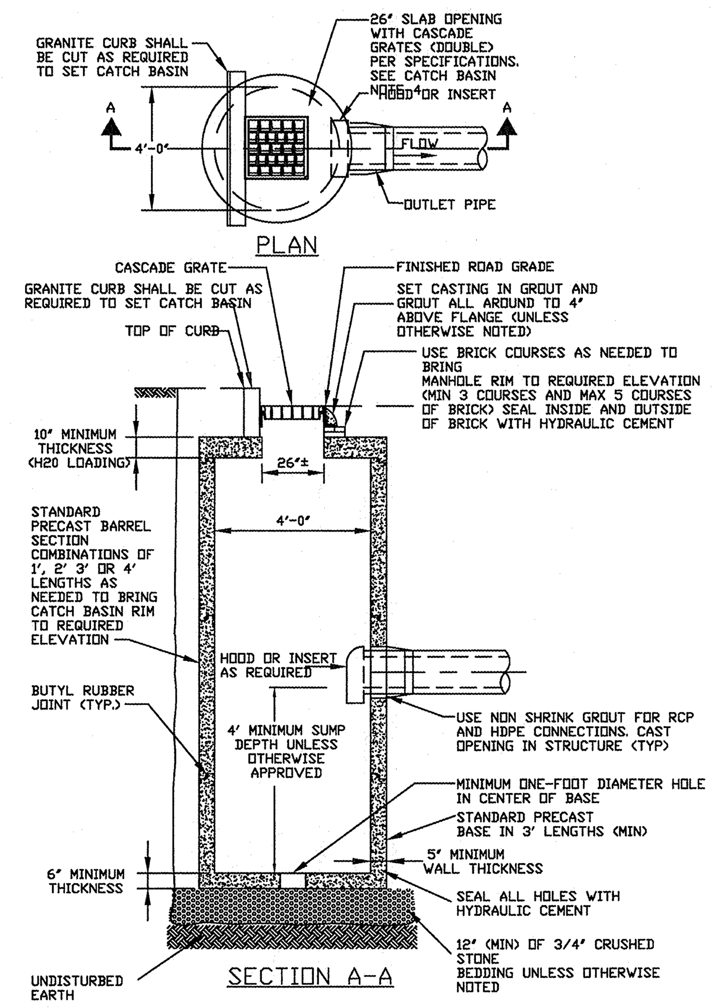

Single Grate Catch Basin 9/2008

N.T.S. Source: Framingham D.P.W. D-4.1.0

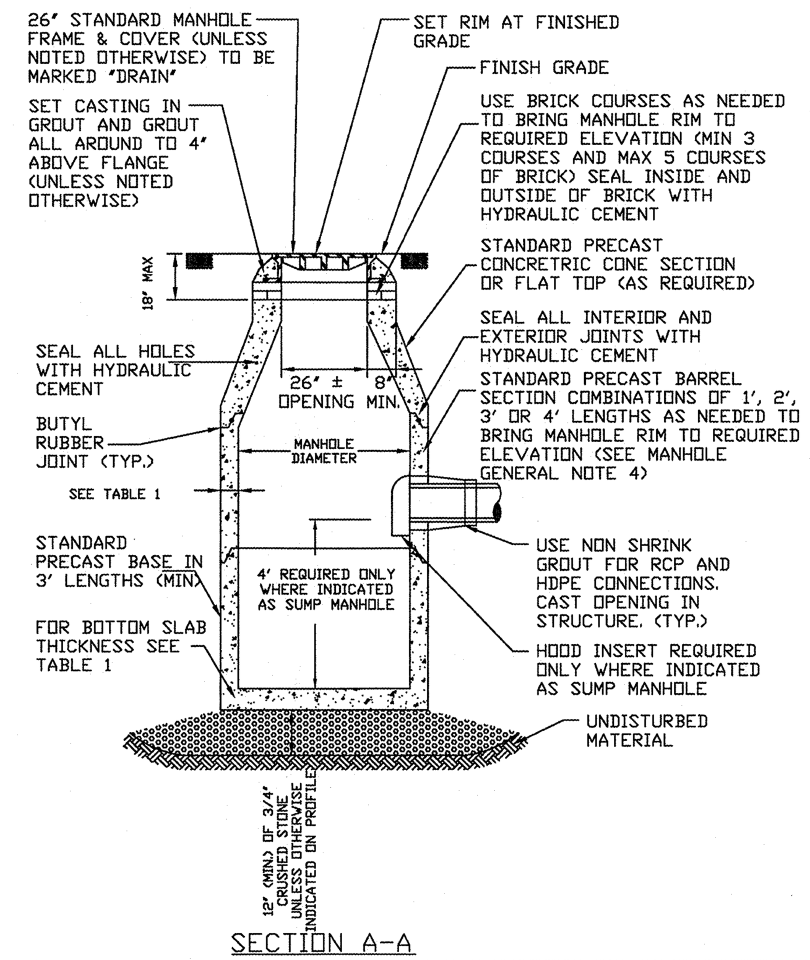

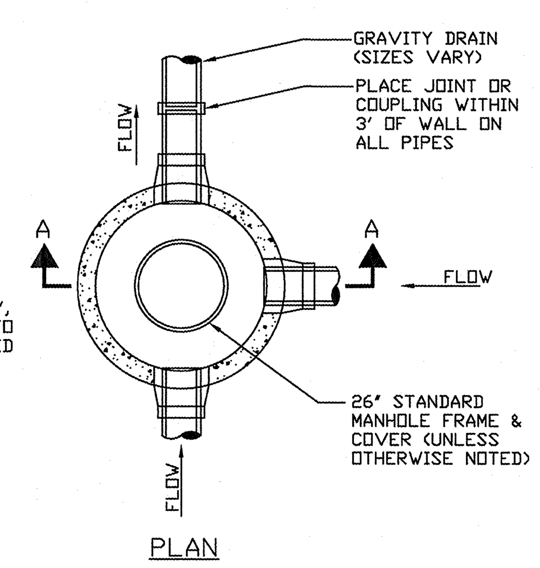

Drain Manhole 9/2008

N.T.S. Source: Framingham D.P.W. D-4.2.0

Vanasse Hangen Brustlin, Inc.
Transportation
Land Development
Environmental Services
99 High Street
Boston, Massachusetts 02110
617.728.7777 • FAX 617.728.7782

FRAMINGHAM PLANNING BOARD

PLAN ENDORSEMENT

DATE OF ENDORSEMENT: ______

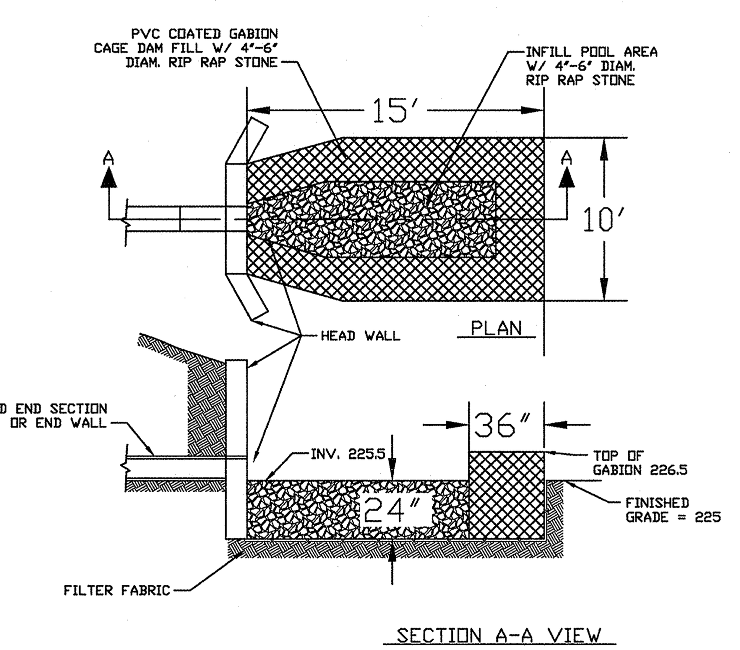

Outlet Protection Plunge Pool 9/2008

N.T.S. Source: Framingham D.P.W. D-4.4.1

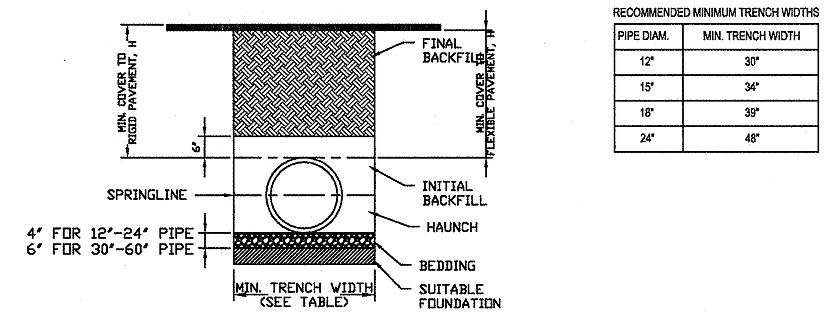

RECOMMENDED MINIMUM TRENCH WIDTHS

PIPE DIAM.	MIN. TRENCH WIDTH
12"	30"
15"	34"
18"	39"
24"	48"

NOTES:

1. ALL PIPE SYSTEMS SHALL BE INSTALLED IN ACCORDANCE WITH ASTM D2321, "STANDARD PRACTICE FOR UNDERGROUND INSTALLATION OF THERMOPLASTIC PIPE FOR SEWERS AND OTHER GRAVITY FLOW APPLICATIONS", LATEST ADDITION.
2. MEASURES SHOULD BE TAKEN TO PREVENT MIGRATION OF NATIVE FINES INTO BACKFILL MATERIAL, WHEN REQUIRED.
3. FOUNDATION: WHERE THE TRENCH BOTTOM IS UNSTABLE, THE CONTRACTOR SHALL EXCAVATE TO A DEPTH REQUIRED BY THE ENGINEER AND REPLACE WITH SUITABLE MATERIAL AS SPECIFIED BY THE ENGINEER. AS AN ALTERNATIVE AND AT THE DISCRETION OF THE DESIGN ENGINEER, THE TRENCH BOTTOM MAY BE STABILIZED USING A GEOTEXTILE MATERIAL.
4. BEDDING: SUITABLE MATERIAL SHALL BE CLASS I, II OR III. THE CONTRACTOR SHALL PROVIDE DOCUMENTATION FOR MATERIAL SPECIFICATION TO ENGINEER. UNLESS OTHERWISE NOTED BY THE ENGINEER, MINIMUM BEDDING THICKNESS SHALL BE 4" FOR 12"-24"; 6" FOR 30"-60".
5. INITIAL BACKFILL: SUITABLE MATERIAL SHALL BE CLASS I, II OR III IN THE PIPE ZONE EXTENDING NOT LESS THAN 6" ABOVE CROWN OF PIPE. THE CONTRACTOR SHALL PROVIDE DOCUMENTATION FOR MATERIAL SPECIFICATION TO ENGINEER. MATERIAL SHALL BE INSTALLED AS REQUIRED IN ASTM D2321, LATEST EDITION.
6. MINIMUM COVER: MINIMUM COVER, H, IN NON-TRAFFIC APPLICATIONS (GRASS OR LANDSCAPE AREAS) IS 12" FROM THE TOP OF PIPE TO GROUND SURFACE. ADDITIONAL COVER MAY BE REQUIRED TO PREVENT FLOATION. FOR TRAFFIC APPLICATIONS, MINIMUM COVER, H, IS 36" MEASURED FROM TOP OF PIPE TO BOTTOM OF FLEXIBLE PAVEMENT OR TO TOP OF RIGID PAVEMENT.

Typical HDPE Pipe Trench Detail 9/2008

N.T.S. Source: Framingham D.P.W. D-4.5.0

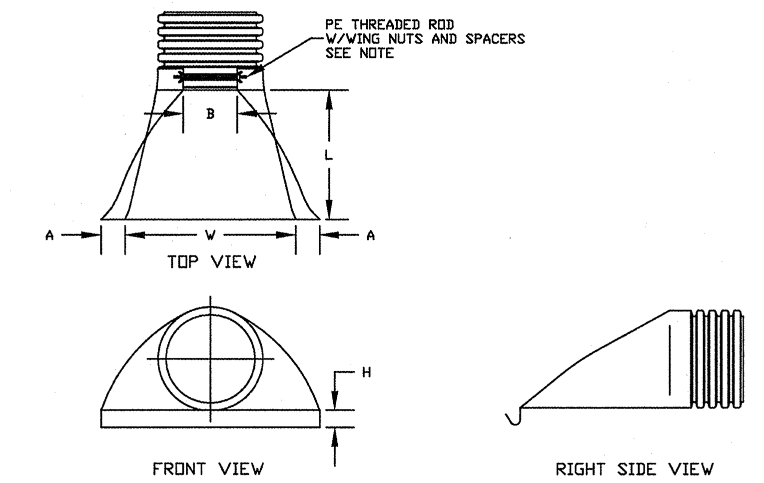

PIPE SIZE	A	B (MAX)	H	L	W
12 IN	6.50 IN	10.00 IN	6.50 IN	25.00 IN	29.00 IN

NOTES:

1. PE THREADED ROD W/WING NUTS PROVIDED FOR END SECTIONS 12"-24". 30" & 36" END SECTIONS REQUIRE TWO (2) THREADED RODS FOR ASSEMBLY.
2. ALL DIMENSIONS ARE NOMINAL.

Flared HDPE End Sections 9/2008

N.T.S. Source: Framingham D.P.W. D-4.6.0

TRENCH PAY LIMIT TABLE FOR MANHOLES AND CATCH BASINS

WALL THICKNESS	MAX TRENCH WIDTH
LESS THAN 6"	I.D. + 5'-0"
6" TO 12"	I.D. + 6'-0"
13" TO 18"	I.D. + 7'-0"
19" & GREATER	O.D. + 6'-0"

I.D. = INSIDE DIMENSION
O.D. = OUTSIDE DIMENSION

FOR TRENCHES GREATER THAN 5' DEEP ADD 3' FOR TEMPORARY SUPPORT OF EXCAVATION

GENERAL CATCH BASIN NOTES:

1. FACE OF PIPE SHALL NOT PROJECT MORE THAN 4-INCHES FROM FACE OF WALL ALONG CENTERLINE OF PIPE.
2. DESIGN PRECAST SECTIONS WITH FRAME AND GRATE FOR AASHTO H20 LOADING UNLESS OTHERWISE NOTED.
3. PRECAST TOP SLAB OPENING CAN BE CENTERED OR OFFSET AS NECESSARY.
4. GRATE VANES SHALL BE INSTALLED IN DIRECTION TO RECEIVE FLOWS.

TABLE 1

MANHOLE DIAMETER	SIDE WALL MIN. THICKNESS	BOTTOM SLAB MIN. THICKNESS	MAX PIPE DIAMETER * RCP	DI/PVC
4'	5"	6"	24"	30"
5'	6"	8"	36"	42"
6'	6"	8"	48"	54"
8'	8"	8"	66"	72"
10'	10"	10"	72"	84"

* MAY VARY DEPENDING ON SIZE AND LOCATION OF ADDITIONAL PENETRATIONS OR RELATIONSHIP OF PENETRATIONS IN MANHOLE

MANHOLE GENERAL NOTES:

1. DRAIN MANHOLE DIAMETER SHALL BE 4', 5', 6', 8' OR 10' AS SHOWN ON PLAN/PROFILE VIEWS.
2. DESIGN PRECAST SECTIONS WITH FRAME AND COVER FOR AASHTO H20 LOADINGS UNLESS OTHERWISE NOTED.
3. MANHOLES LARGER THAN 4' IN DIAMETER AT THE BASE SHALL BE REDUCED IN DIAMETER TO 4' AT THE NEXT RISER SECTION UNLESS NOTED OTHERWISE ON PLANS.

Manholes and Catch Basins General Notes and Dimensions 9/2008

N.T.S. Source: Framingham D.P.W. D-4.3.0

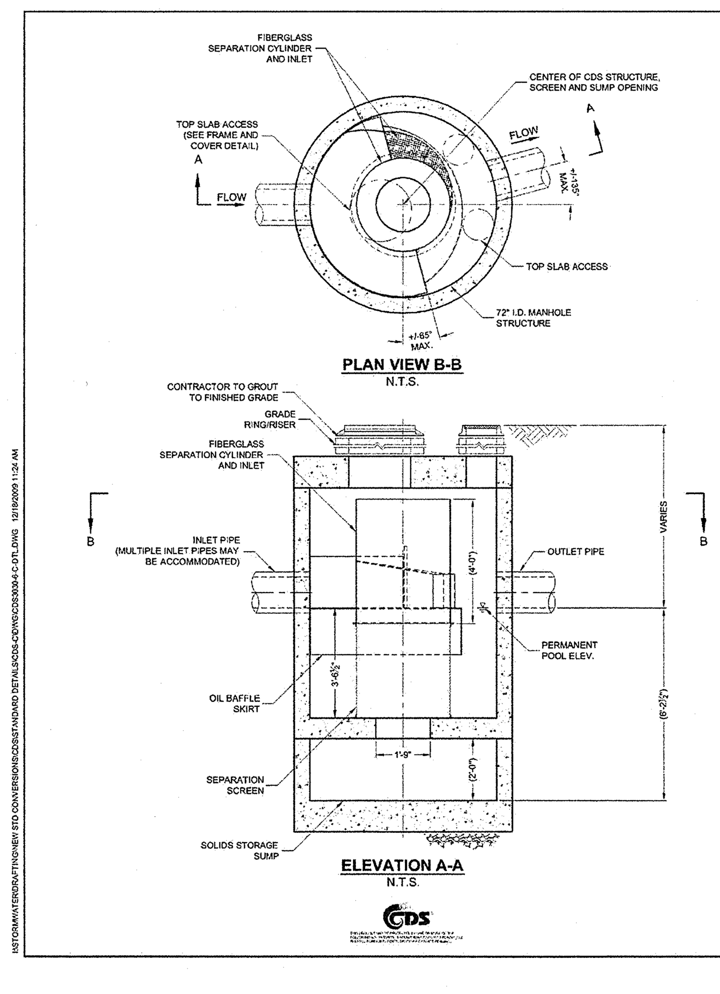

CDS3030-6-C DESIGN NOTES

CDS3030-6-C RATED TREATMENT CAPACITY IS 3.0 CFS, OR PER LOCAL REGULATIONS. MAXIMUM HYDRAULIC INTERNAL BYPASS CAPACITY IS 20.0 CFS. IF THE SITE CONDITIONS EXCEED 20.0 CFS, AN UPSTREAM BYPASS STRUCTURE IS REQUIRED.

THE STANDARD CDS3030-6-C CONFIGURATION IS SHOWN. ALTERNATE CONFIGURATIONS ARE AVAILABLE AND ARE LISTED BELOW. SOME CONFIGURATIONS MAY BE COMBINED TO SUIT SITE REQUIREMENTS.

CONFIGURATION DESCRIPTION
GRATED INLET ONLY (NO INLET PIPE)
GRATED INLET WITH INLET PIPE OR PIPES
CURB INLET ONLY (NO INLET PIPE)
CURB INLET WITH INLET PIPE OR PIPES
SEPARATE OIL BAFFLE (SINGLE INLET PIPE REQUIRED FOR THIS CONFIGURATION)
SEDIMENT WEIR FOR NJDEP / NJCAT CONFORMING UNITS

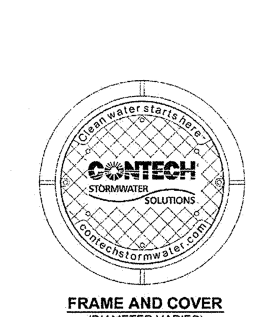

FRAME AND COVER
(DIAMETER VARIES)
N.T.S.

SITE SPECIFIC DATA REQUIREMENTS

STRUCTURE ID			
WATER QUALITY FLOW RATE (CFS)			*
PEAK FLOW RATE (CFS)			*
RETURN PERIOD OF PEAK FLOW (YRS)			*
SCREEN APERTURE (2400 OR 4700)			*
PIPE DATA:	I.E.	MATERIAL	DIAMETER
INLET PIPE 1	*	*	*
INLET PIPE 2	*	*	*
OUTLET PIPE	*	*	*
RIM ELEVATION			*
ANTI-FLOTATION BALLAST		WIDTH	HEIGHT
		*	*
NOTES/SPECIAL REQUIREMENTS:			
* PER ENGINEER OF RECORD			

GENERAL NOTES
1. CONTECH TO PROVIDE ALL MATERIALS UNLESS NOTED OTHERWISE.
2. DIMENSIONS MARKED WITH ( ) ARE REFERENCE DIMENSIONS. ACTUAL DIMENSIONS MAY VARY.
3. FOR FABRICATION DRAWINGS WITH DETAILED STRUCTURE DIMENSIONS AND WEIGHTS, PLEASE CONTACT YOUR CONTECH CONSTRUCTION PRODUCTS REPRESENTATIVE. www.contech-cpi.com
4. CDS WATER QUALITY STRUCTURE SHALL BE IN ACCORDANCE WITH ALL DESIGN DATA AND INFORMATION CONTAINED IN THIS DRAWING.
5. STRUCTURE SHALL MEET AASHTO HS20 AND CASTINGS SHALL MEET AASHTO M306 LOAD RATING, ASSUMING GROUNDWATER ELEVATION AT, OR BELOW, THE OUTLET PIPE INVERT ELEVATION. ENGINEER OF RECORD TO CONFIRM ACTUAL GROUNDWATER ELEVATION.

INSTALLATION NOTES
1. ANY SUB-BASE, BACKFILL DEPTH, AND/OR ANTI-FLOTATION PROVISIONS ARE SITE-SPECIFIC DESIGN CONSIDERATIONS AND SHALL BE SPECIFIED BY ENGINEER OF RECORD.
2. CONTRACTOR TO PROVIDE EQUIPMENT WITH SUFFICIENT LIFTING AND REACH CAPACITY TO LIFT AND SET THE CDS MANHOLE STRUCTURE (LIFTING CLUTCHES PROVIDED).
3. CONTRACTOR TO ADD JOINT SEALANT BETWEEN ALL STRUCTURE SECTIONS, AND ASSEMBLE STRUCTURE.
4. CONTRACTOR TO PROVIDE, INSTALL, AND GROUT PIPES. MATCH PIPE INVERTS WITH ELEVATIONS SHOWN.
5. CONTRACTOR TO TAKE APPROPRIATE MEASURES TO ASSURE UNIT IS WATER TIGHT, HOLDING WATER TO FLOWLINE INVERT MINIMUM. IT IS SUGGESTED THAT ALL JOINTS BELOW PIPE INVERTS ARE GROUTED.

CONTECH CONSTRUCTION PRODUCTS INC.
www.contech-cpl.com
9025 Centre Pointe Dr., Suite 400, West Chester, OH 45069
800-338-1122 513-645-7000 513-645-7993 FAX

CDS3030-6-C
INLINE CDS
STANDARD DETAIL

CDS3030-6-C

N.T.S. Source: Contech

No.	Revision	Date	Appvd.

Designed by SARR | Drawn by SARR | Checked by CYM

CAD checked by | Approved by

Scale NTS | Date December 17, 2013

Project Title

125 Penn

125 Pennsylvania Avenue
Framingham, Massachusetts

Issued for

Not Approved for Construction

Drawing Title

Details

COMMONWEALTH OF MASSACHUSETTS CHI Y. MAN CIVIL NO. 45441 REGISTERED PROFESSIONAL ENGINEER

12-17-13

Drawing Number

C-10

Sheet 10 of 13

Project Number 10734.01

Saved Tuesday, December 24, 2013 9:27:04 AM JALBANI Plotted Monday, January 06, 2014 12:41:26 PM Jackson, Mark

VHB
Vanasse Hangen Brustlin, Inc.
Transportation
Land Development
Environmental Services
99 High Street
Boston, Massachusetts 02110
617.728.7777 • FAX 617.728.7782

FRAMINGHAM PLANNING BOARD
PLAN ENDORSEMENT

DATE OF ENDORSEMENT: _____

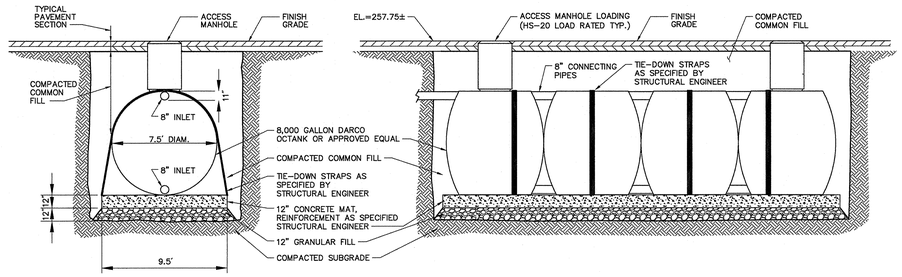

Typical Prefabricated Rainwater Harvesting Tank

12/11

N.T.S. Source: VHB LD_402

TABLE

OCS DMH	A	B	C	D	E	F	G	H	J	K	L
OCS 1	228.3	4"	226.5	227.3	90°	1.0'	228.6	228.9	229.0	229.2	230.1
OCS 2	251.0	4"	249.5	250.0	90°	1.0'	251.2	251.6	251.7	251.9	255.5
OCS 2	256.0	4"	254.6	255.3	90°	1.0'	255.0	255.5	255.7	256.0	257.3

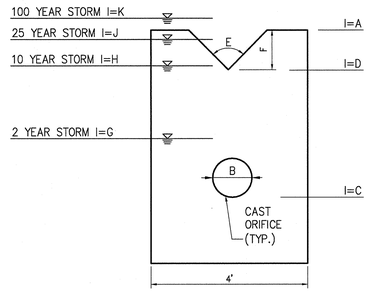

Outlet Control Structure (OCS) Baffle
DMH RIM = L
BAFFLE THICKNESS = 4"

Baffle Detail

N.T.S.

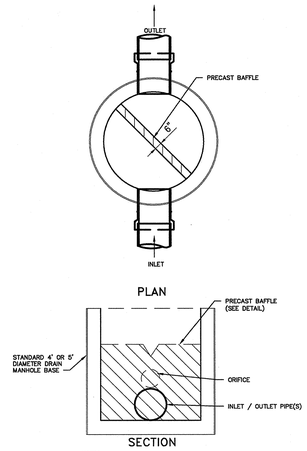

NOTES:
1. DETAIL TO MODIFY A DRAIN MANHOLE. SEE DRAIN MANHOLE DETAIL FOR ADDITIONAL INFORMATION
2. SEE SITE PLAN FOR PIPE INVERTS
3. SEE PRECAST OUTLET CONTROL BAFFLE DETAIL FOR MESH AND ORIFICE INVERTS

Outlet Control Structure (OCS) Detail

7/21/05

N.T.S.

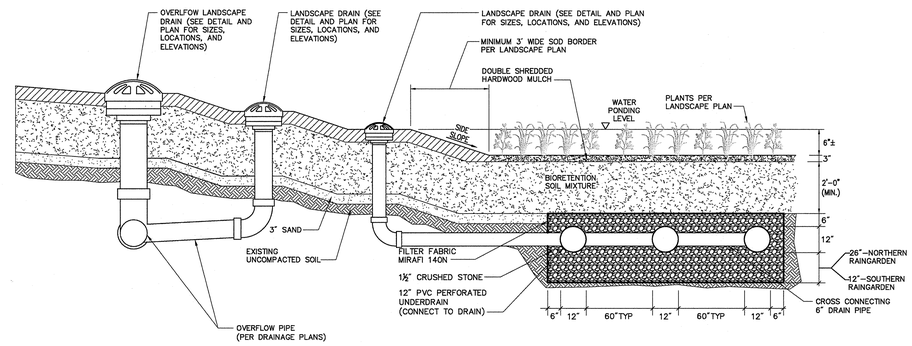

Notes:

1. INSTALL UNDERDRAINS AT 10 FEET ON CENTER. CONNECT TO DRAINS PER PLAN.
2. SIDE SLOPES SHALL BE 3:1 MAX. 2% MIN.

Rain Garden with Subdrain

6/08

N.T.S. REV Source: VHB LD_352

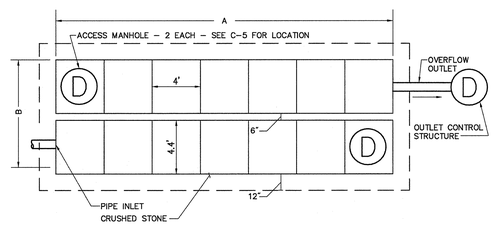

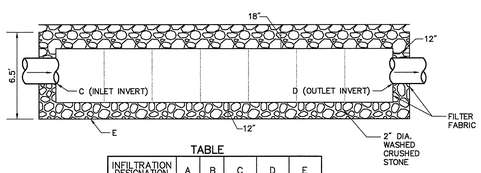

TABLE

INFILTRATION DESIGNATION	A	B	C	D	E
INFILTR. 1	82'	26.5	247.6	247.6	246.0
INFILTR. 2A	38'	26.5	226.3	226.3	224.3
INFILTR. 2B	50'	11.3	226.3	226.3	224.3

NOTE: INFILTRATION SYSTEM 2 IS NOT

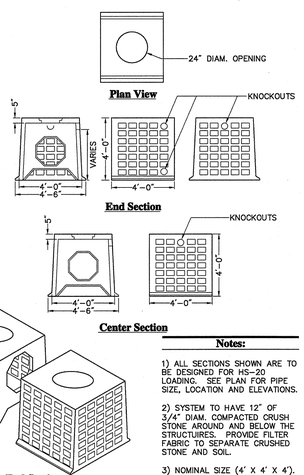

Notes:

1) ALL SECTIONS SHOWN ARE TO BE DESIGNED FOR HS-20 LOADING. SEE PLAN FOR PIPE SIZE, LOCATION AND ELEVATIONS.

2) SYSTEM TO HAVE 12" OF 3/4" DIAM. COMPACTED CRUSH STONE AROUND AND BELOW THE STRUCTUIRES. PROVIDE FILTER FABRIC TO SEPARATE CRUSHED STONE AND SOIL.

3) NOMINAL SIZE (4' X 4' X 4').

4) 4,000 PSI CONCRETE.

Precast Galley

6/03

N.T.S. Source: VHB LD_185

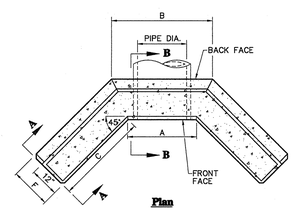

Dimensional Table

PIPE DIA.	A	B	C	D	E	F	SAFETY BARS REQUIRED
12"	2'-6"	3'-8"	2'-11"	4'-0"	3'-3"	1'-6"	–
15"	2'-6"	3'-8"	2'-11"	4'-0"	3'-6"'	1'-6"	1
18"	3'-0"	4'-2"	3'-3"	4'-6"	3'-6"	1'-6"	1
24"	3'-6"	4'-8"	3'-6"	5'-0"	3'-9"	1'-6"	1

1. CONCRETE SHALL BE COMPRESSIVE STRENGTH 4000 PSI AIR ENTRAINED TYPE II CEMENT.
2. INSTALL IMPERMEABLE TRENCH DAM ANTI-SEEP COLLAR AROUND DRAIN PIPE PRIOR TO HEADWALL LOCATION
3. SAFETY BARS TO BE OMITTED WHERE INDICATED ON PLANS.
4. SAFETY BARS SHALL BE SET TO CREATE EQUAL OPENING DIMENSIONS.

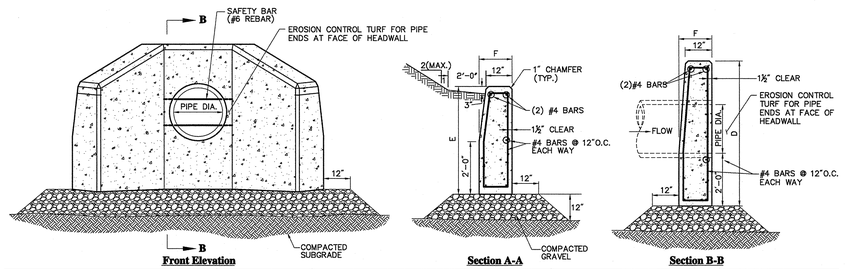

Concrete Headwall (HW) with Wing Walls

6/08

N.T.S. Source: VHB LD_132

No.	Revision	Date	Apprvd.

Designed by SARR | Drawn by SARR | Checked by CYM
CAD checked by | Approved by
Scale NTS | Date December 17, 2013

Project Title
125 Penn

125 Pennsylvania Avenue
Framingham, Massachusetts
Issued for

Not Approved for Construction
Drawing Title

Details

COMMONWEALTH OF MASSACHUSETTS CHRY. MANN CIVIL NO. 45441 REGISTERED PROFESSIONAL ENGINEER
12-17-13

Drawing Number
C-11

Sheet 11 of 13

Project Number
10734.01

10734.00-DT.DWG

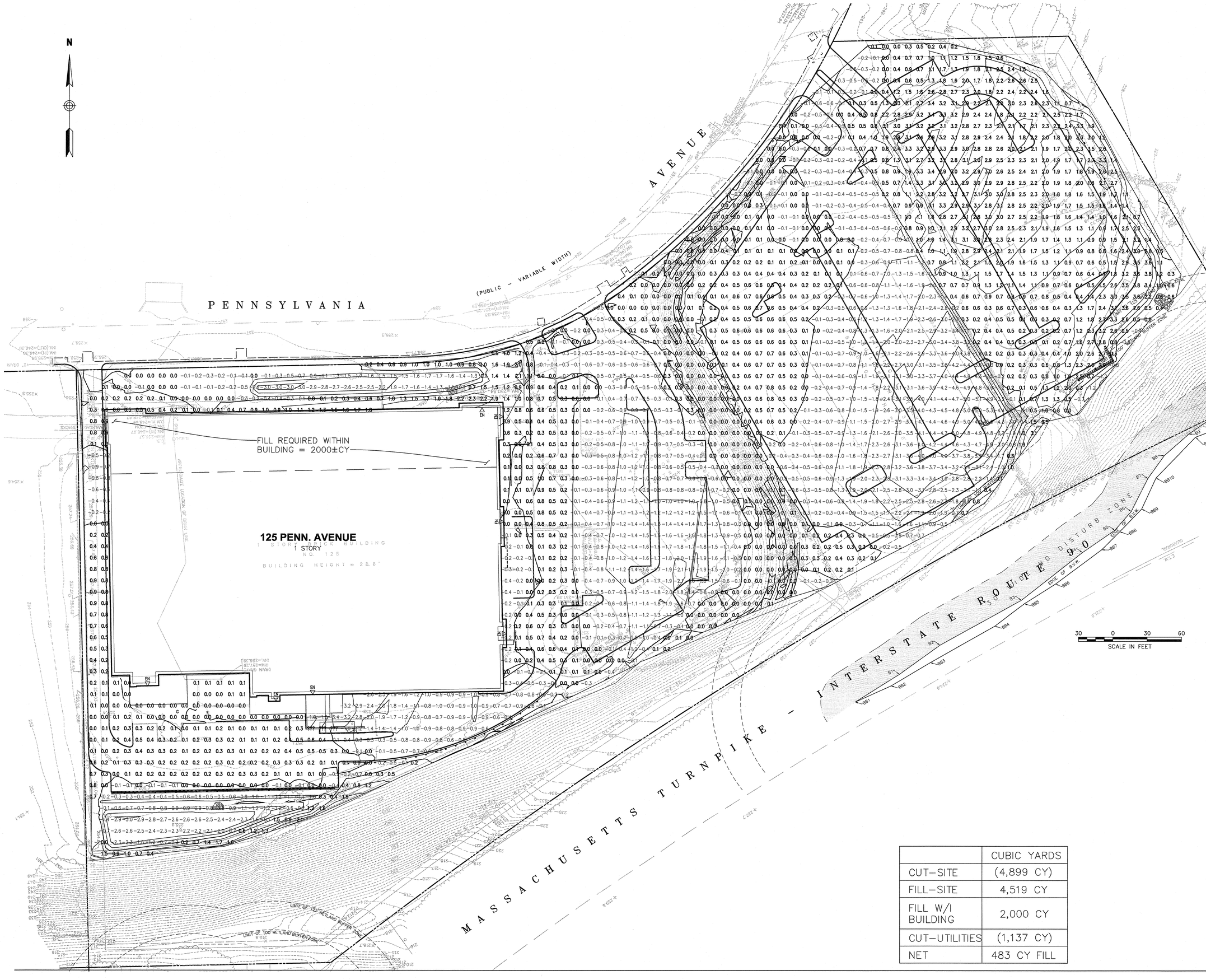

	CUBIC YARDS
CUT-SITE	(4,899 CY)
FILL-SITE	4,519 CY
FILL W/I BUILDING	2,000 CY
CUT-UTILITIES	(1,137 CY)
NET	483 CY FILL

VHB
Vanasse Hangen Brustlin, Inc.
Transportation
Land Development
Environmental Services
99 High Street
Boston, Massachusetts 02110
617.728.7777 • FAX 617.728.7782

FRAMINGHAM PLANNING BOARD
PLAN ENDORSEMENT

DATE OF ENDORSEMENT: _____

No.	Revision	Date	Apprvd.

Designed by JDA | Drawn by JDA | Checked by CYM
CAD checked by | Approved by
Scale 1"=30' | Date December 17, 2013

Project Title
125 Penn

125 Pennsylvania Avenue
Framingham, Massachusetts
Issued for

Not Approved for Construction

Drawing Title
Cut and Fill Plan

COMMONWEALTH OF MASSACHUSETTS
CHI Y. MAN
CIVIL
NO. 45441
REGISTERED PROFESSIONAL ENGINEER
12-17-13

Drawing Number
C-12
Sheet 12 of 13
Project Number
10734.01

10734.00-CUT.DWG

\\VHB\PROJ\BOSTON\10734.00\CAD\LD\PLANSET\10734.00-SMP
Saved Monday, December 16, 2013 3:42:39 PM MJACKSON Plotted Monday, December 16, 2013 3:42:50 PM Jackson, Mark

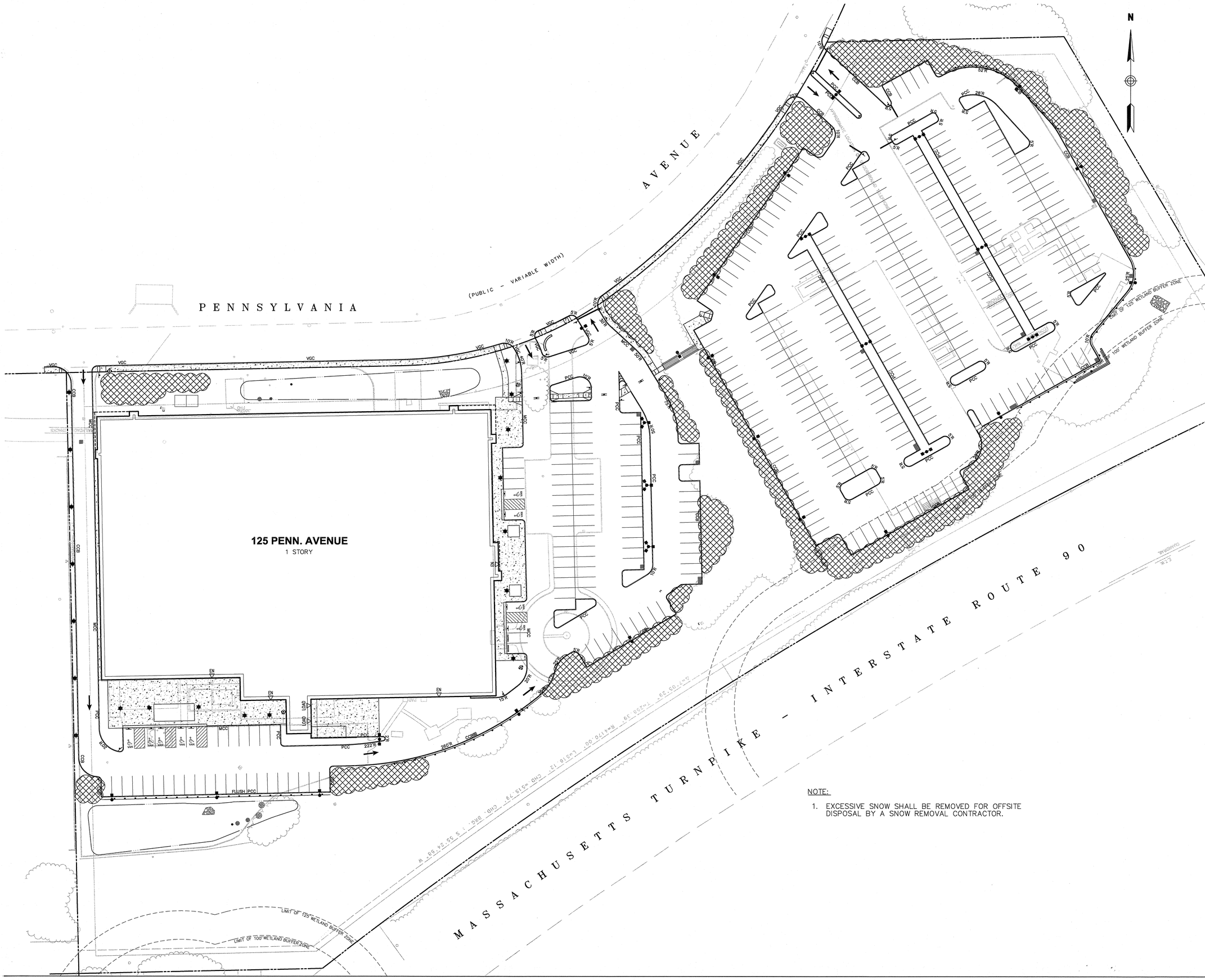

VHB
Vanasse Hangen Brustlin, Inc.
Transportation
Land Development
Environmental Services
99 High Street
Boston, Massachusetts 02110
617.728.7777 • FAX 617.728.7782

FRAMINGHAM PLANNING BOARD
PLAN ENDORSEMENT

DATE OF ENDORSEMENT: _____

LEGEND
SNOW STORAGE AREA

NOTE:

1. EXCESSIVE SNOW SHALL BE REMOVED FOR OFFSITE DISPOSAL BY A SNOW REMOVAL CONTRACTOR.

No.	Revision	Date	Appvd.

Designed by KCW | Drawn by KCW | Checked by CYM
CAD checked by | Approved by CYM
Scale 1"=30' | Date December 16, 2013

Project Title
125 Pennsylvania Avenue

125 Pennsylvania Avenue
Framingham, Massachusetts
Issued for

Not Approved for Construction
Drawing Title
Snow Management Plan

COMMONWEALTH OF MASSACHUSETTS
CHI Y. MAN
CIVIL
NO. 49441
REGISTERED PROFESSIONAL ENGINEER
12-17-13

Drawing Number
C-13
Sheet 13 of 13
Project Number
10734.01
10734.00-SMP.DWG

Landscape Notes

1. ALL PROPOSED PLANTING LOCATIONS SHALL BE STAKED AS SHOWN ON THE PLANS FOR FIELD REVIEW AND APPROVAL BY THE LANDSCAPE ARCHITECT PRIOR TO INSTALLATION.
2. CONTRACTOR SHALL VERIFY LOCATIONS OF ALL BELOW GRADE AND ABOVE GROUND UTILITIES AND NOTIFY OWNERS REPRESENTATIVE OF CONFLICTS.
3. NO PLANT MATERIALS SHALL BE INSTALLED UNTIL ALL GRADING AND CONSTRUCTION HAS BEEN COMPLETED IN THE IMMEDIATE AREA. CONTRACTOR SHALL NOTIFY OWNER'S REPRESENTATIVE OF ANY CONFLICT.
4. A 3-INCH DEEP MULCH PER SPECIFICATION SHALL BE INSTALLED UNDER ALL TREES AND SHRUBS, AND IN ALL PLANTING BEDS, UNLESS OTHERWISE INDICATED ON THE PLANS, OR AS DIRECTED BY OWNER'S REPRESENTATIVE.
5. ALL TREES SHALL BE BALLED AND BURLAPPED, UNLESS OTHERWISE NOTED IN THE DRAWINGS OR SPECIFICATION, OR APPROVED BY THE OWNER'S REPRESENTATIVE.
6. FINAL QUANTITY FOR EACH PLANT TYPE SHALL BE AS GRAPHICALLY SHOWN ON THE PLAN. THIS NUMBER SHALL TAKE PRECEDENCE IN CASE OF ANY DISCREPANCY BETWEEN QUANTITIES SHOWN ON THE PLANT LIST AND ON THE PLAN. THE CONTRACTOR SHALL REPORT ANY DISCREPANCIES BETWEEN THE NUMBER OF PLANTS SHOWN ON THE PLANT LIST AND PLANT LABELS PRIOR TO BIDDING.
7. ANY PROPOSED PLANT SUBSTITUTIONS MUST BE REVIEWED BY LANDSCAPE ARCHITECT AND APPROVED IN WRITING BY THE OWNER'S REPRESENTATIVE.
8. ALL PLANT MATERIALS INSTALLED SHALL MEET THE SPECIFICATIONS OF THE "AMERICAN STANDARDS FOR NURSERY STOCK" BY THE AMERICAN ASSOCIATION OF NURSERYMEN AND CONTRACT DOCUMENTS.
9. ALL PLANT MATERIALS SHALL BE GUARANTEED FOR ONE YEAR FOLLOWING DATE OF FINAL ACCEPTANCE.
10. AREAS DESIGNATED "LOAM & SEED" SHALL RECEIVE MINIMUM 6" OF LOAM AND SPECIFIED SEED MIX. LAWNS OVER 2:1 SLOPE SHALL BE PROTECTED WITH EROSION CONTROL FABRIC.
11. ALL DISTURBED AREAS NOT OTHERWISE NOTED ON CONTRACT DOCUMENTS SHALL BE LOAM AND SEEDED OR MULCHED AS DIRECTED BY OWNER'S REPRESENTATIVE.
12. THIS PLAN IS INTENDED FOR PLANTING PURPOSES. REFER TO SITE / CIVIL DRAWINGS FOR ALL OTHER SITE CONSTRUCTION INFORMATION.

Irrigation Notes

1. CONTRACTOR SHALL PROVIDE COMPLETE IRRIGATION SYSTEM DESIGN AND INSTALLATION FOR PLANTINGS AND LAWN AREAS WHERE INDICATED ONLY. DESIGN SHALL BE CERTIFIED BY A PROFESSIONAL LANDSCAPE ARCHITECT, ENGINEER, OR CERTIFIED IRRIGATION DESIGNER. DESIGN PLANS SHALL BE SUBMITTED TO OWNER'S REPRESENTATIVE FOR APPROVAL.
2. CONTRACTOR SHALL PROVIDE ALL MATERIALS, LABOR, AND EQUIPMENT FOR THE COMPLETE INSTALLATION OF THE IRRIGATION SYSTEM.
3. CONTRACTOR SHALL PROVIDE DRAWINGS, MATERIAL SPECIFICATIONS, SCHEMATICS, AND OTHER LITERATURE AS MAY BE REQUIRED, FOR ALL CONDUIT, CONTROLS,TIMERS, VALVES, SPRINKLER HEADS, CONNECTORS, WIRING, RAIN GUAGE, ETC. TO THE OWNER'S CONSTRUCTION MANAGER FOR APPROVAL PRIOR TO INSTALLATION.
4. CONTRACTOR SHALL COORDINATE HIS WORK WITH THE GENERAL CONTRACTOR AND SUB CONTRACTORS.
5. BACKFLOW PREVENTER AND METER IS REQUIRED. IT SHALL BE IN CONFORMANCE WITH STATE AND MUNICIPAL REQUIREMENTS.
6. IRRIGATION CONTROL PANEL, BACKFLOW PREVENTER AND METER SHALL BE LOCATED IN THE BUILDING MECHANICAL ROOM. COORDINATE WITH THE GENERAL CONTRACTOR.
7. SITE CONTRACTOR SHALL PROVIDE 4" SCHEDULE 40 PVC SLEEVES UNDER PAVEMENT TO PROVIDE ACCESS FOR IRRIGATION LINES TO ALL IRRIGATED AREAS.
8. CONTRACTOR SHALL SUBMIT AND IRRIGATION SYSTEM DESIGN TO THE PLANNING DEPARTMENT FOR REVIEW AND APPROVAL PRIOR TO CONSTRUCTION.

Tree Protection

1. EXISTING TREES TO REMAIN SHALL BE PROTECTED WITH TEMPORARY CONSTRUCTION FENCE. ERECT FENCE AT EDGE OF THE TREE DRIPLINE PRIOR TO START OF CONSTRUCTION.
2. CONTRACTOR SHALL NOT OPERATE VEHICLES WITHIN THE TREE PROTECTION AREA. CONTRACTOR SHALL NOT STORE VEHICLES OR MATERIALS, OR DISPOSE OF ANY WASTE MATERIALS, WITHIN THE TREE PROTECTION AREA.
3. DAMAGE TO EXISTING TREES CAUSED BY THE CONTRACTOR SHALL BE REPAIRED BY A CERTIFIED ARBORIST AT THE CONTRACTOR'S EXPENSE.

Plant Maintenance Notes

1. CONTRACTOR SHALL PROVIDE COMPLETE MAINTENANCE OF THE LAWNS AND PLANTINGS. NO IRRIGATION IS PROPOSED FOR THE LOWER PORTION OF THE SITE. THE CONTRACTOR SHALL SUPPLY SUPPLEMENTAL WATERING FOR NEW LAWNS AND PLANTINGS DURING THE ONE YEAR PLANT GUARANTEE PERIOD FOR ALL AREAS NOT INDICATED AS IRRIGATED.
2. CONTRACTOR SHALL PROVIDE ALL MATERIALS, LABOR, AND EQUIPMENT FOR THE COMPLETE LANDSCAPE MAINTENANCE WORK. WATER FOR THESE AREAS SHALL BE PROVIDED BY THE CONTRACTOR.
3. WATERING SHALL BE REQUIRED DURING THE GROWING SEASON, WHEN NATURAL RAINFALL IS BELOW ONE INCH PER WEEK.
4. WATER SHALL BE APPLIED IN SUFFICIENT QUANTITY TO THOROUGHLY SATURATE THE SOIL IN THE ROOT ZONE OF EACH PLANT.
5. CONTRACTOR SHALL REPLACE DEAD OR DYING PLANTS AT THE END OF THE ONE YEAR GUARANTEE PERIOD. CONTRACTOR SHALL TURN OVER MAINTENANCE TO THE FACILITY MAINTENANCE STAFF AT THAT TIME.

Framingham Planning Board Requiements

1. THE CONTRACTOR WILL BE HELD TO THE FOLLOWING REQUIREMENT OF THE FRAMINGHAM PLANNING BOARD IN ADDITION TO THE NOTES FOUND ON THIS SHEET AND ALL APPLICABLE SPECIFICATIONS.

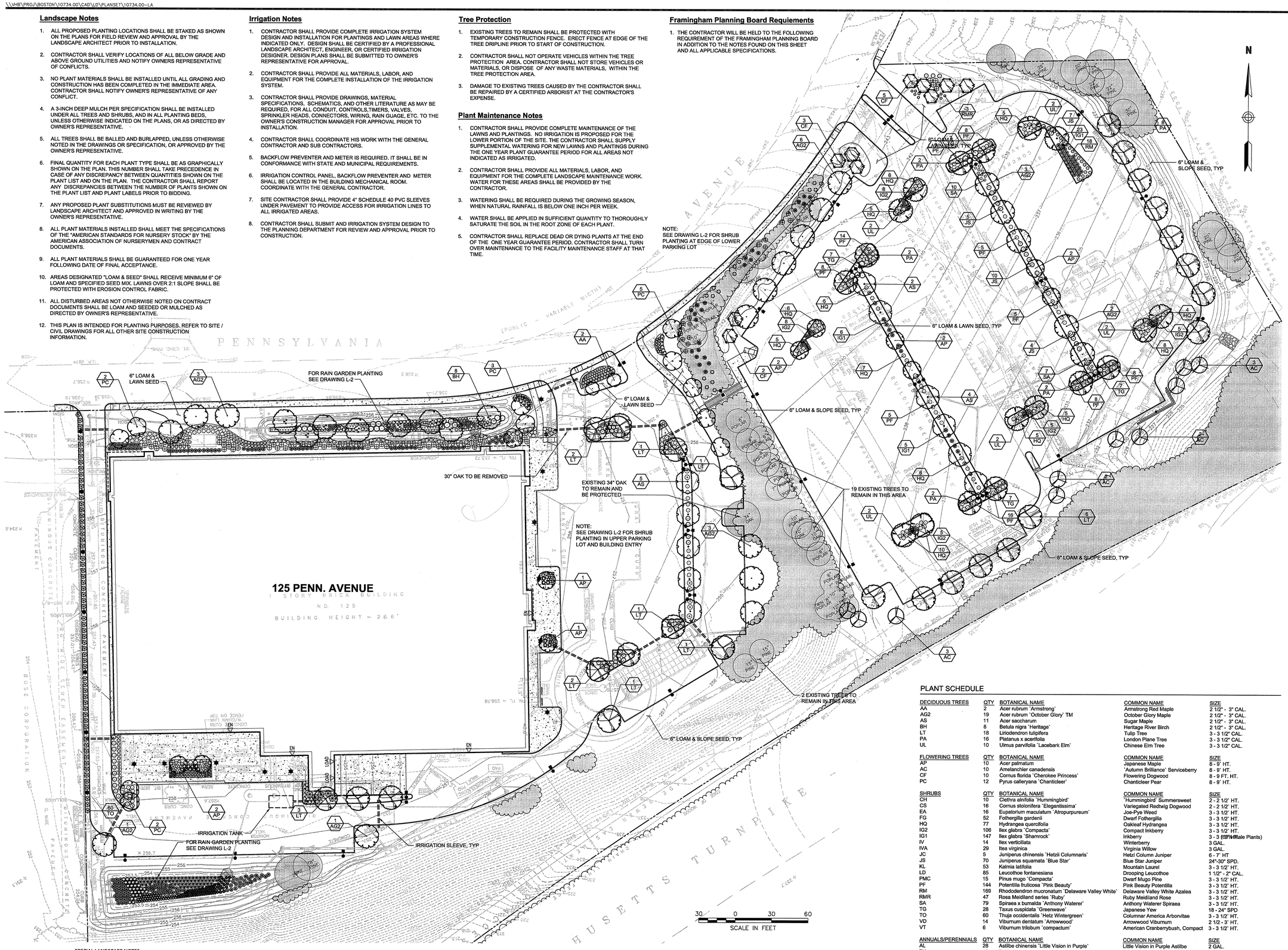

PLANT SCHEDULE

DECIDUOUS TREES	QTY	BOTANICAL NAME	COMMON NAME	SIZE
AA	2	Acer rubrum 'Armstrong'	Armstrong Red Maple	2 1/2" - 3" CAL.
AG2	19	Acer rubrum 'October Glory' TM	October Glory Maple	2 1/2" - 3" CAL.
AS	11	Acer saccharum	Sugar Maple	2 1/2" - 3" CAL.
BH	8	Betula nigra 'Heritage'	Heritage River Birch	2 1/2" - 3" CAL.
LT	18	Liriodendron tulipifera	Tulip Tree	3 - 3 1/2" CAL.
PA	16	Platanus x acerifolia	London Plane Tree	3 - 3 1/2" CAL.
UL	10	Ulmus parvifolia 'Lacebark Elm'	Chinese Elm Tree	3 - 3 1/2" CAL.

FLOWERING TREES	QTY	BOTANICAL NAME	COMMON NAME	SIZE
AP	10	Acer palmatum	Japanese Maple	8 - 9' HT.
AC	10	Amelanchier canadensis	'Autumn Brilliance' Serviceberry	8 - 9' HT.
CF	10	Cornus florida 'Cherokee Princess'	Flowering Dogwood	8 - 9 FT. HT.
PC	12	Pyrus calleryana 'Chanticleer'	Chanticleer Pear	8 - 9' HT.

SHRUBS	QTY	BOTANICAL NAME	COMMON NAME	SIZE
CH	10	Clethra alnifolia 'Hummingbird'	'Hummingbird' Summersweet	2 - 2 1/2' HT.
CS	16	Cornus stolonifera 'Elegantissima'	Variegated Redtwig Dogwood	2 - 2 1/2' HT.
EA	16	Eupatorium maculatum 'Atropurpureum'	Joe-Pye Weed	3 - 3 1/2' HT.
FG	52	Fothergilla gardenii	Dwarf Fothergilla	3 - 3 1/2' HT.
HQ	77	Hydrangea quercifolia	Oakleaf Hydrangea	3 - 3 1/2' HT.
IG2	106	Ilex glabra 'Compacta'	Compact Inkberry	3 - 3 1/2' HT.
IG1	147	Ilex glabra 'Shamrock'	Inkberry	3 - 3 (10% Male Plants)
IV	14	Ilex verticillata	Winterberry	3 GAL.
IVA	29	Itea virginica	Virginia Willow	3 GAL.
JC	5	Juniperus chinensis 'Hetzii Columnaris'	Hetzi Column Juniper	6 - 7' HT
JS	70	Juniperus squamata 'Blue Star'	Blue Star Juniper	24"-30" SPD.
KL	53	Kalmia latifolia	Mountain Laurel	3 - 3 1/2' HT.
LD	85	Leucothoe fontanesiana	Drooping Leucothoe	1 1/2" - 2" CAL.
PMC	15	Pinus mugo 'Compacta'	Dwarf Mugo Pine	3 - 3 1/2' HT.
PF	144	Potentilla fruticosa 'Pink Beauty'	Pink Beauty Potentilla	3 - 3 1/2' HT.
RM	169	Rhododendron mucronatum 'Delaware Valley White'	Delaware Valley White Azalea	3 - 3 1/2' HT.
RMR	47	Rosa Meidiland series 'Ruby'	Ruby Meidiland Rose	3 - 3 1/2' HT.
SA	79	Spiraea x bumalda 'Anthony Waterer'	Anthony Waterer Spiraea	3 - 3 1/2' HT.
TG	28	Taxus cuspidata 'Greenwave'	Japanese Yew	18 - 24" SPD
TO	60	Thuja occidentalis 'Hetz Wintergreen'	Columnar America Arborvitae	3 - 3 1/2' HT.
VD	14	Viburnum dentatum 'Arrowwood'	Arrowwood Viburnum	2 1/2 - 3' HT.
VT	6	Viburnum trilobum 'compactum'	American Cranberrybush, Compact	3 - 3 1/2' HT.

ANNUALS/PERENNIALS	QTY	BOTANICAL NAME	COMMON NAME	SIZE
AL	28	Astilbe chinensis 'Little Vision in Purple'	Little Vision in Purple Astilbe	2 GAL.
EK	40	Echinacea purpurea 'Kim's Knee High' TM	Purple Coneflower	2 gal
HP	12	Hemerocallis x 'Pardon Me'	Pardon Me Daylily	2 gal
HP2	39	Hemerocallis x 'Purple D'Oro'	Daylily	2 gal
LB	11	Lobelia siphilitica 'Big Blue'	Blue Lobelia	3 GAL.
RF	51	Rudbeckia fulgida	Coneflower	1 GAL.
SA2	17	Sedum x 'Autumn Joy'	Autumn Joy Sedum	2 gal

GRASSES	QTY	BOTANICAL NAME	COMMON NAME	SIZE
DC	19	Deschampsia cespitosa	Tufted Hair Grass	1 GAL.
ES	107	Eragrostis spectabilis	Purple Love Grass	1 GAL.
PV	67	Panicum virgatum	Switch Grass	1 GAL.

SHRUB AREAS	QTY	BOTANICAL NAME	COMMON NAME	SIZE	SPACING
CP	32	Comptonia peregrina	Sweet Fern	#3 POT	36" o.c.

SPECIAL LANDSCAPE NOTES

1. CONTRACTOR SHALL SUBMIT AN IRRIGATION SYSTEM DESIGN TO THE PLANNING DEPARTMENT FOR REVIEW & APPROVAL PRIOR TO CONSTRUCTION.
2. MULCH TO BE PLACED IN SHRUB BEDS NO GREATER THAN 12" FROM THE DRIP LINE.
3. REPLACE EXISTING SOIL IN PLANT BEDS WITH TOPSOIL TO A DEPTH OF 24" MINIMUM.
4. REMOVE SOIL FROM STEMS OF ROOT FLARE AREA.
5. PLANT MATERIAL TYPES, QUANTITIES AND LOCATIONS SHALL NOT BE MODIFIED EXCEPT WITH PERMISSION OF THE PLANNING BOARD DURING INITIAL INSTALLATION.
6. EXISTING SOIL (TOPSOIL) SHOULD BE REUSED AS MUCH AS POSSIBLE. LOAM BORROW SHOULD ONLY BE BROUGHT IN AS NEEDED. BOTH TOPSOIL AND LOAM BORROW SHOULD BE TESTED BY A UNIVERSITY AGRICULTURAL LAB, SUCH AS UMASS SOIL TESTING LAB, TO DETERMINE IF IT NEEDS AMENDMENTS. LAB SHOULD PROVIDE RECOMMENDATIONS FOR AMENDMENTS BASED UPON PLANTING TYPE, EVERGREEN DECIDUOUS, LAWN ETC.
7. CONTRACTOR SHOULD FURNISH PLANTS IN QUANTITIES AS SHOWN ON PLANS, NOT IN SCHEDULE.
8. REMOVE SOIL FROM TRUNK FLARES OF TREES AND STEMS OF SHRUBS TO DETERMINE ACTUAL TOP OF ROOTBALL AREA.
9. FERTILIZE AS NEEDED PER RECOMMENDATIONS OF SOIL TESTING LAB.
10. THERE IS A 2-YEAR GUARANTEE REQUIRED.
11. NO PLANT MATERIAL CHANGES WITHOUT PERMISSION OF THE LANDSCAPE ARCHITECT.
12. TREES AND SHRUBS SHALL BE B+B OR CONTAINER - NO BARE ROOT.
13. SEEDING - LOAM AND TOPSOIL SHOULD BE 6" AFTER SETTLEMENT, MIN. FERTILIZE AND LIME PER SOIL TESTING LAB RECOMMENDATIONS.
14. DO NOT OVER-COMPACT PLANTING AREAS. IF AREAS BECOME COMPACTED, DISC TOP 4" - 6" TO UNCOMPACT.
15. LOAM - OBTAIN LABORATORY TEST FOR TOPSOIL AND LOAM BORROW. ASK FOR pH (5.5 TO 6.5 PREFERRED), BUFFER pH, ORGANIC MATTER (5 - 10%), SOLUBLE SALTS, AND SOILD TEXTURE.
16. ADD MICORRHIZA SPORES IN PLANT BEDS AND PITS.
17. TREES AND SHRUBS SHALL BE TAGGED BY THE LANDSCAPE ARCHITECT.
18. TREE PITS SHOULD BE FLOODED 2 TIMES IN SUCCESSION WITH WATER, AND EVALUATED FOR DRAINAGE CHARACTERISTICS AFTER A 24 HOUR PERIOD.
19. CONTRACTOR SHOULD PLAN TO PROVIDE CLEAN POTABLE WATER, HOSES AND ALL EQUIPMENT TO WATER PLANTS.
20. PLANTS SHOULD BE WATERED FROM TIME OF DELIVERY UNTIL ACCEPTANCE.
21. USE TREEGATERS TO PROVIDE SLOW, DEEP WATERING FOR TREES.
22. GENERAL CONTRACTOR TO REMOVE EXISTING INVASIVE SPECIES ON SITE (NORWAY MAPLE, BUCKTHORN, KNOTWEED, ETC.). CONTROL OF INVASIVE SPECIES SHOULD BE MONITORED THROUGH REGULAR, PERIODIC MAINTENANCE.
23. GENERAL CONTRACTOR TO REMOVE ROOT BASKETS, BURLAP, WRAPS AND TIES ENTIRELY AND DISCARD.
24. GENERAL CONTRACTOR TO UTILIZE STRAW FOR EROSION CONTROL.
25. THE INTENT OF THE SHRUB PLANTINGS ARE TO GROW INTO MASSES FOR SCREENING AND VISUAL INTEREST.

VHB
Vanasse Hangen Brustlin, Inc.
Transportation
Land Development
Environmental Services
99 High Street
Boston, Massachusetts 02110
617.728.7777 • FAX 617.728.7782

FRAMINGHAM PLANNING BOARD
PLAN ENDORSEMENT

DATE OF ENDORSEMENT: _____

No.	Revision	Date	Appvd.

Designed by | Drawn by | Checked by
CAD checked by | Approved by
Scale 1"=30' | Date December 17, 2013

Project Title
125 Penn

125 Pennsylvania Avenue
Framingham, Massachusetts

Issued for
Not Approved for Construction

Drawing Title
Planting Plan

Drawing Number
L-1

Sheet of 13

Project Number
10734.01

10734.00-LA.DWG

PLANT SPACING ("A")	ROW SPACING ("B")
6 IN. O.C.	5 IN. O.C.
8 IN. O.C.	7 IN. O.C.
10 IN. O.C.	8-1/2 IN. O.C.
12 IN. O.C.	10-1/2 IN. O.C.
15 IN. O.C.	13 IN. O.C.
18 IN. O.C.	16 IN. O.C.
24 IN. O.C.	21 IN. O.C.

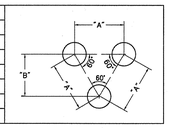

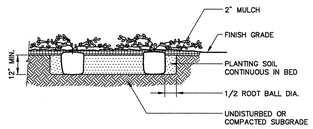

Ground Cover Planting

11/09

N.T.S. Source: VHB LD_615

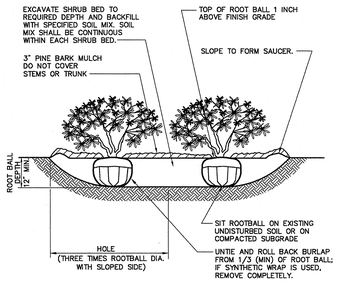

Notes:

1. LOOSEN ROOTS AT THE OUTER EDGE OF ROOTBALL OF CONTAINER GROWN SHRUBS.

Shrub Bed Planting

6/08

N.T.S. Source: VHB LD_601

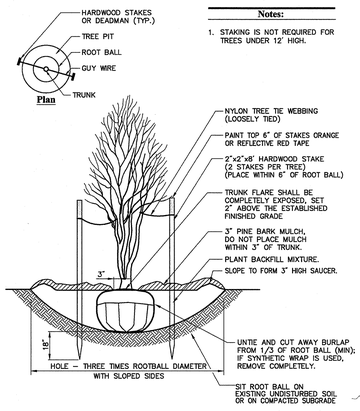

Notes:

1. STAKING IS NOT REQUIRED FOR TREES UNDER 12' HIGH.

Multistem Tree Planting

6/08

N.T.S. Source: VHB LD_606

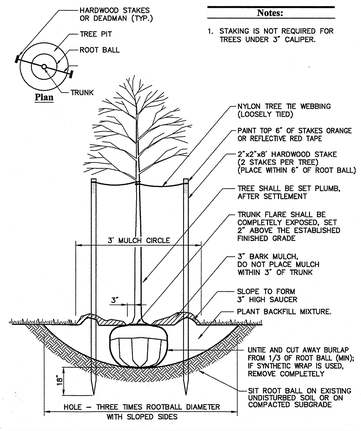

Notes:

1. STAKING IS NOT REQUIRED FOR TREES UNDER 3" CALIPER.

Tree Planting (For Trees Under 4" Caliper)

1/10

N.T.S. Source: VHB LD_602

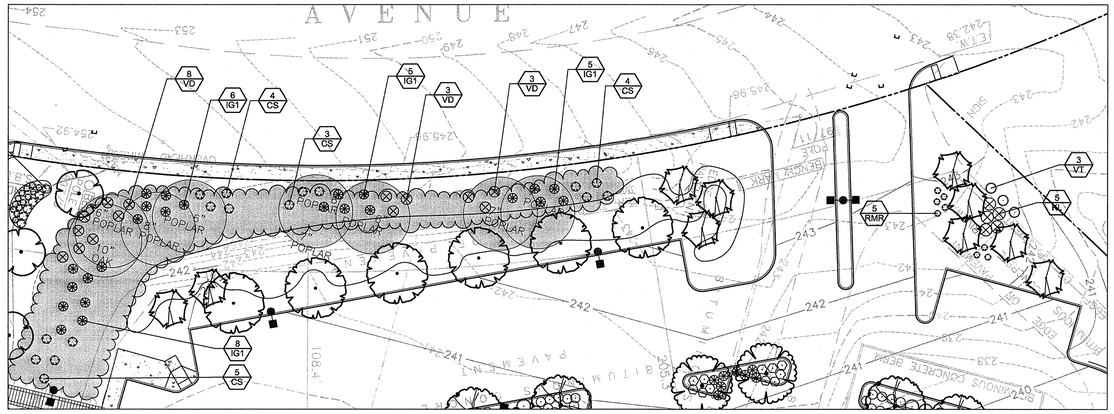

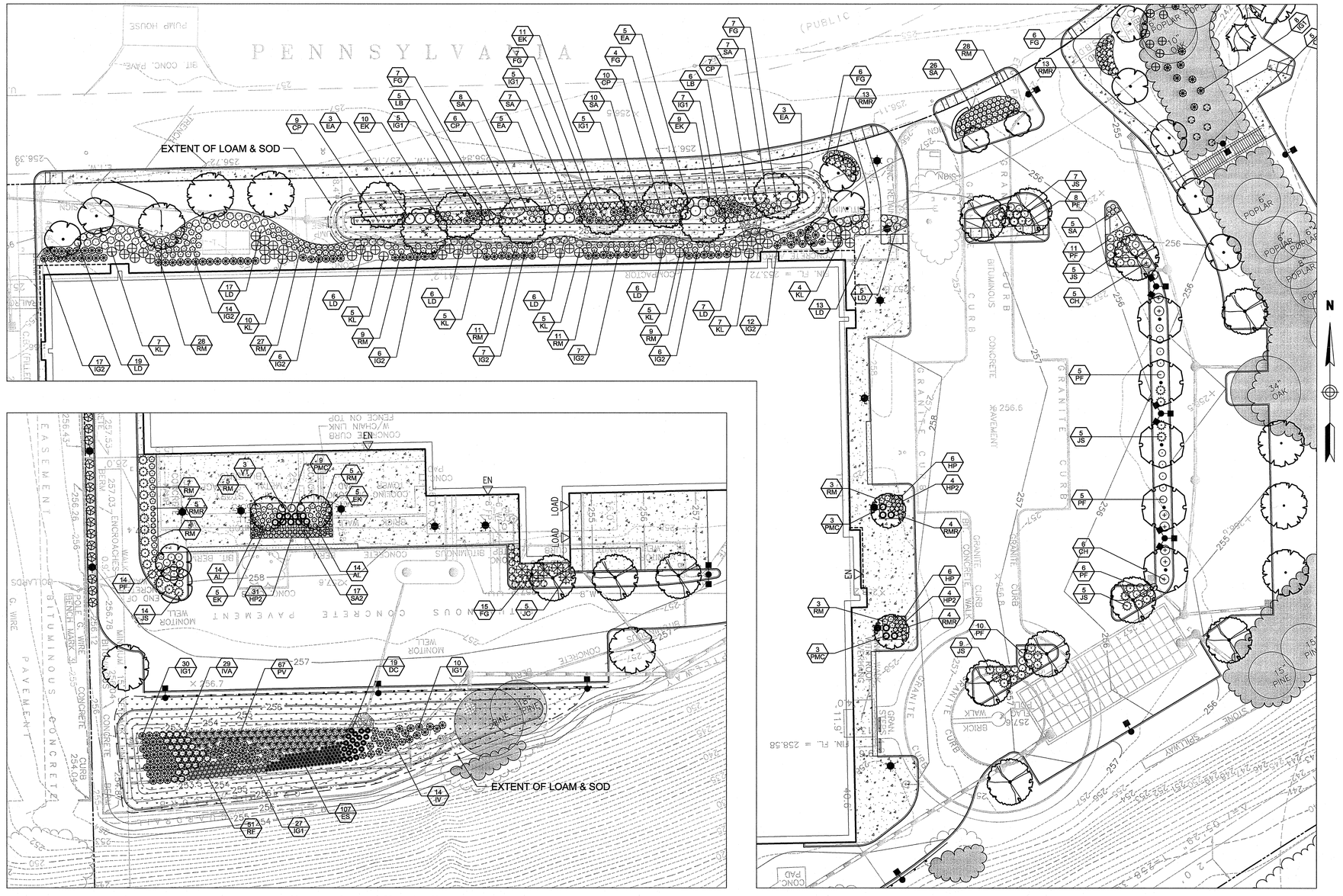

VHB
Vanasse Hangen Brustlin, Inc.
Transportation
Land Development
Environmental Services
99 High Street
Boston, Massachusetts 02110
617.728.7777 • FAX 617.728.7782

FRAMINGHAM PLANNING BOARD
PLAN ENDORSEMENT

DATE OF ENDORSEMENT:

No.	Revision	Date	Appvd.

Designed by | Drawn by | Checked by
CAD checked by | Approved by
Scale As Noted | Date December 17, 2013

Project Title
125 Penn

125 Pennsylvania Avenue
Framingham, Massachusetts

Issued for
Not Approved for Construction

Drawing Title
Planting Plan
Enlargements and Details

Drawing Number
L-2

Sheet of 13

Project Number
10734.01

10734.00-LA.DWG

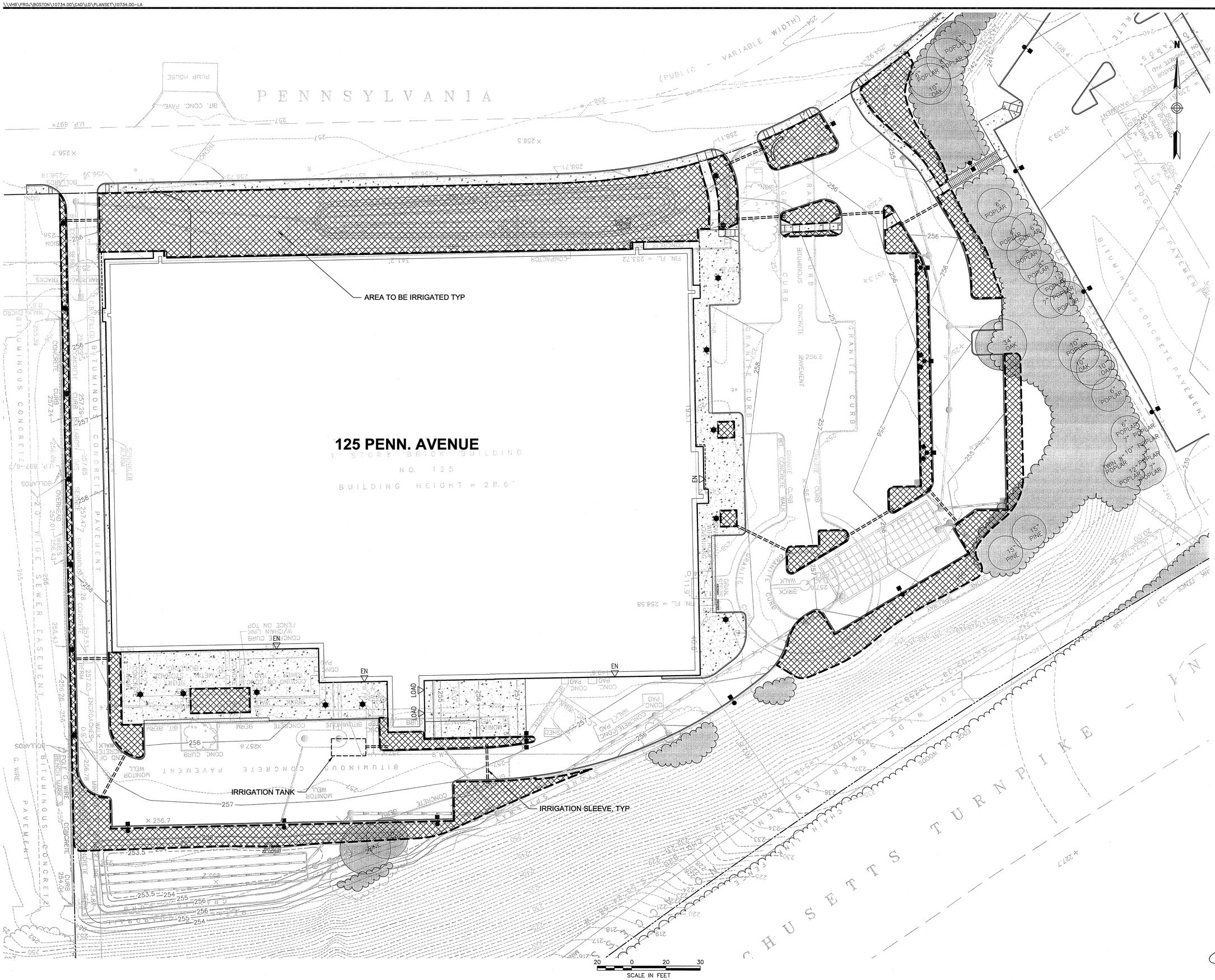

VHB
Vanasse Hangen Brustlin, Inc.
Transportation
Land Development
Environmental Services
99 High Street
Boston, Massachusetts 02110
617.728.7777 • FAX 617.728.7782

FRAMINGHAM PLANNING BOARD
PLAN ENDORSEMENT

DATE OF ENDORSEMENT: _____

No.	Revision	Date	Appvd.

Designed by | Drawn by | Checked by
CAD checked by | Approved by
Scale 1"=20' | Date December 17, 2013

Project Title
125 Penn

125 Pennsylvania Avenue
Framingham, Massachusetts
Issued for

Not Approved for Construction
Drawing Title
Irrigation Coverage Plan

Drawing Number
L-3
Sheet of 13

Project Number
10734.01

10734.00-LA.DWG

FRAMINGHAM PLANNING BOARD
PLAN ENDORSEMENT

DATE OF ENDORSEMENT

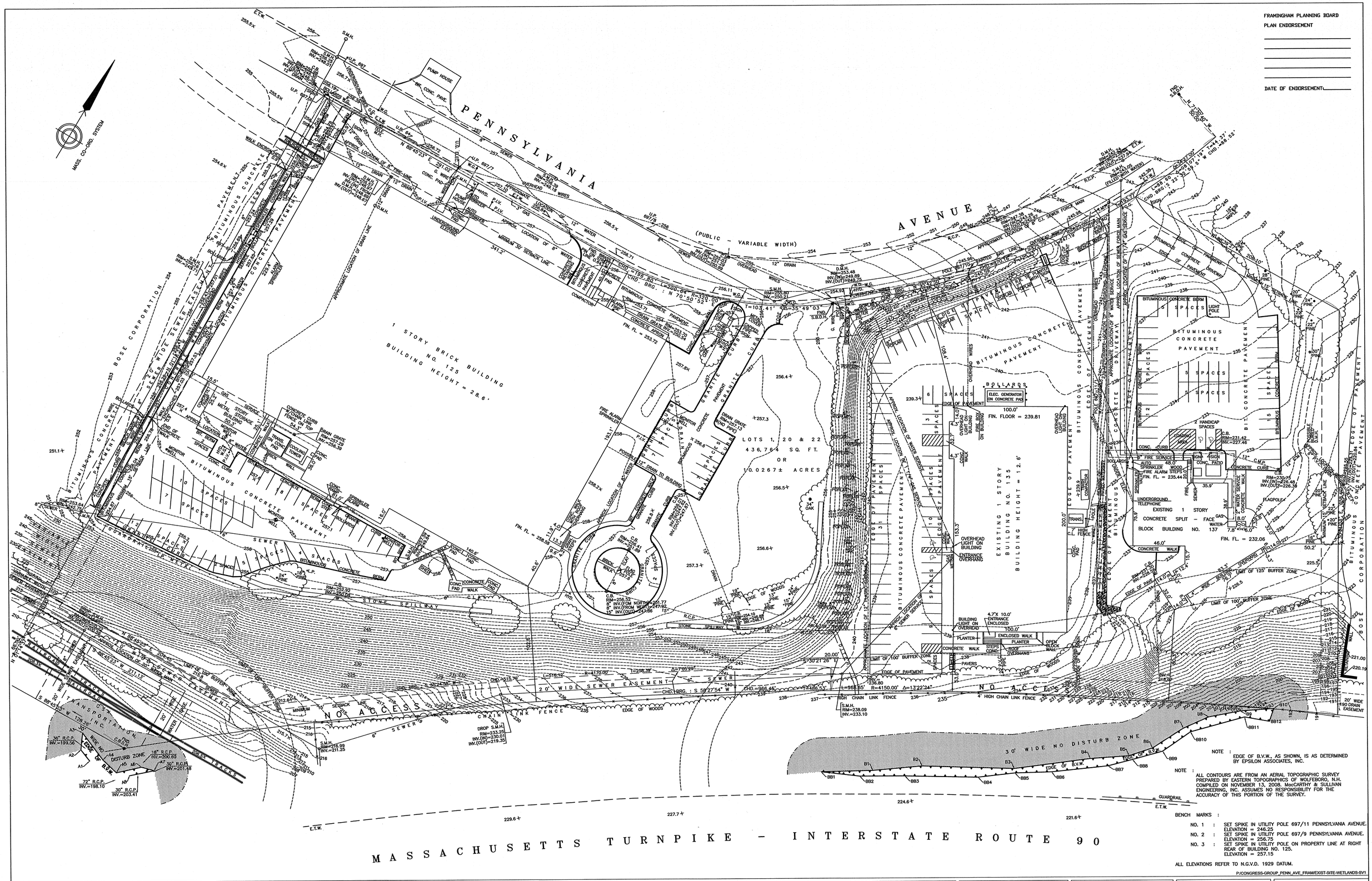

NOTE : EDGE OF B.V.W., AS SHOWN, IS AS DETERMINED BY EPSILON ASSOCIATES, INC.

NOTE : ALL CONTOURS ARE FROM AN AERIAL TOPOGRAPHIC SURVEY PREPARED BY EASTERN TOPOGRAPHICS OF WOLFEBORO, N.H. COMPILED ON NOVEMBER 13, 2008. MacCARTHY & SULLIVAN ENGINEERING, INC. ASSUMES NO RESPONSIBILITY FOR THE ACCURACY OF THIS PORTION OF THE SURVEY.

BENCH MARKS :

NO. 1 : SET SPIKE IN UTILITY POLE 697/11 PENNSYLVANIA AVENUE. ELEVATION = 246.25

NO. 2 : SET SPIKE IN UTILITY POLE 697/9 PENNSYLVANIA AVENUE. ELEVATION = 256.75

NO. 3 : SET SPIKE IN UTILITY POLE ON PROPERTY LINE AT RIGHT REAR OF BUILDING NO. 125. ELEVATION = 257.15

ALL ELEVATIONS REFER TO N.G.V.D. 1929 DATUM.

P:/CONGRESS-GROUP_PENN_AVE_FRAM/EXIST-SITE-WETLANDS-SV1

ALL UNDERGROUND UTILITIES SHOWN WERE COMPILED ACCORDING TO AVAILABLE RECORDS FROM THE VARIOUS UTILITY COMPANIES AND ARE APPROXIMATE ONLY. ACTUAL LOCATIONS MUST BE MADE IN THE FIELD.

WE ASSUME NO RESPONSIBILITY FOR DAMAGES INCURRED AS A RESULT OF UTILITIES OMITTED OR INACCURATELY SHOWN.

BEFORE DESIGNING, EXCAVATING, BLASTING, INSTALLING, BACKFILLING, GRADING, PAVEMENT RESTORATION OR REPAIRING, ALL UTILITY COMPANIES, PUBLIC AND PRIVATE, MUST BE CONTACTED, INCLUDING THOSE IN CONTROL OF UTILITIES NOT SHOWN ON THIS PLAN. SEE CHAPTER 370, ACT 1963, MASS.

PRIOR TO THE COMMENCEMENT OF ANY WORK, THE CONTRACTOR OR PROPERTY OWNER, ARE TO CONTACT DIG-SAFE AT (888) 344-7233 TO VERIFY THE LOCATION AND ELEVATION OF ALL EXISTING UTILITIES. BEFORE PLANNING FUTURE CONNECTIONS, THE APPROPRIATE PUBLIC UTILITY ENGINEERING DEPARTMENTS MUST BE CONTACTED.

THESE PLANS ARE TO BE USED FOR OBTAINING APPROVAL FROM THE VARIOUS TOWN BOARDS ONLY, AND ARE NOT TO BE CONSIDERED CONSTRUCTION PLANS.

REVISIONS

NO.	DESCRIPTION	DATE
	ADD TREES AND B.V.W.	

EXISTING CONDITIONS PLAN IN FRAMINGHAM, MASS.

APPLICANT : FRAMINGHAM CFII L.P.

COMMONWEALTH OF MASSACHUSETTS
JOSEPH R. SULLIVAN
No. 18646
REGISTERED PROFESSIONAL ENGINEER

JOSEPH R. SULLIVAN
REGISTERED PROFESSIONAL SURVEYOR

MacCARTHY & SULLIVAN ENGINEERING, INC.
225 NEWBURY STREET FRAMINGHAM, MASS. 01701
(508) 872-8431

SCALE : 1" = 30'
DATE : JULY 31, 2009
DRAWN BY : P.J.S.
CHECKED BY : J.R.S.
SHEET 1 OF 1
DRAWING NO. SV-1

DEED REFERENCE : BOOK 1333, PAGE 16, CERTIFICATE NO. 238719 BOOK 49603, PAGE 353 BOOK 50455, PAGE 455 SO. MIDDLESEX REG. OF DEEDS

ASSESSORS MAP REFERENCE : MAP 460, BLOCK 8 LOTS 1, 20 AND 22

ZONING CLASSIFICATION : TECHNOLOGY PARK

NOTE : THIS DOCUMENT HAS BEEN PREPARED BY MacCARTHY & SULLIVAN ENGINEERING INC. WHICH HOLDS A COPYRIGHT THEREIN.

COPYING OF ANY SUBSTANTIAL PORTION OF A COPYRIGHTED WORK, WITHOUT THE PERMISSION OF THE COPYRIGHT OWNER, IS UNLAWFUL.

Saved Monday, December 30, 2013 10:25:08 AM STATION218 Plotted Monday, December 30, 2013 10:25:33 AM Station 218

TYPES A,B & C LIGHTING POLE BASE DETAIL
NOT TO SCALE

KIM LIGHTING PRODUCTS

TYPE 'A':
FIXTURE: #2B-CC-21-A-5-BL-320PMH-V
POLE: KRS25-5120-B-BL-BC5

2-320 WATT PULSE START METAL HALIDE FIXTURES WITH TYPE 5 REFLECTORS ON 25'-0" ROUND STEEL POLE
25'-0" MOUNTING HEIGHT

TYPE 'B':
FIXTURE: #1A-CC-21-A-3-BL-320PMH-V-HS
POLE: KRS25-5120-B-BL-BC5

1-320 WATT PULSE START METAL HALIDE FIXTURES WITH TYPE 3 REFLECTORS ON 25'-0" STEEL POLE
25'-0" MOUNTING HEIGHT

TYPE 'C':
FIXTURE: #1A-CC-21-A-2-BL-320PMH-V-HS
POLE: KRS25-5120-B-BL-BC5

1-320 WATT PULSE START METAL HALIDE FIXTURES WITH TYPE 2 REFLECTORS ON 25'-0" STEEL POLE
25'-0" MOUNTING HEIGHT

TYPE 'F':
FIXTURE: #3Y-CC-25-A-4-BL-320PMH-V
POLE: KRS25-5120-B-BL-BC5

3-320 WATT PULSE START METAL HALIDE FIXTURES WITH TYPE 4 REFLECTORS ON 25'-0" ROUND STEEL POLE
25'-0" MOUNTING HEIGHT

NOTE:
SIZE, DEPTH & REINFORCING STEEL IN BASE TO BE DETERMINED BY GED. TECH. & STRUCTURAL ENGINEER

TYPES D & E LIGHTING POLE BASE DETAIL
NOT TO SCALE

ARCHITECTURAL AREA LIGHTING PRODUCTS

TYPE 'D':
SLVT-H2-150PSMH-BLACK-HSS
MOUNTED ON A PR4-4R14-125
WITH HSS WHERE NOTED
150 WATT PULSE START

TYPE 'E':
SLVT-H5-150PSMH-BLACK
MOUNTED ON A PR4-4R14-125
150 WATT PULSE START

TYPE 'J':
KIM #LTV768WF-15LED277-NB-HS60
MOUNTED 18" OFF FACE OF WALL TO LIGHT SIGN

NOTE:
SIZE, DEPTH & REINFORCING STEEL IN BASE TO BE DETERMINED BY GED. TECH. & STRUCTURAL ENGINEER

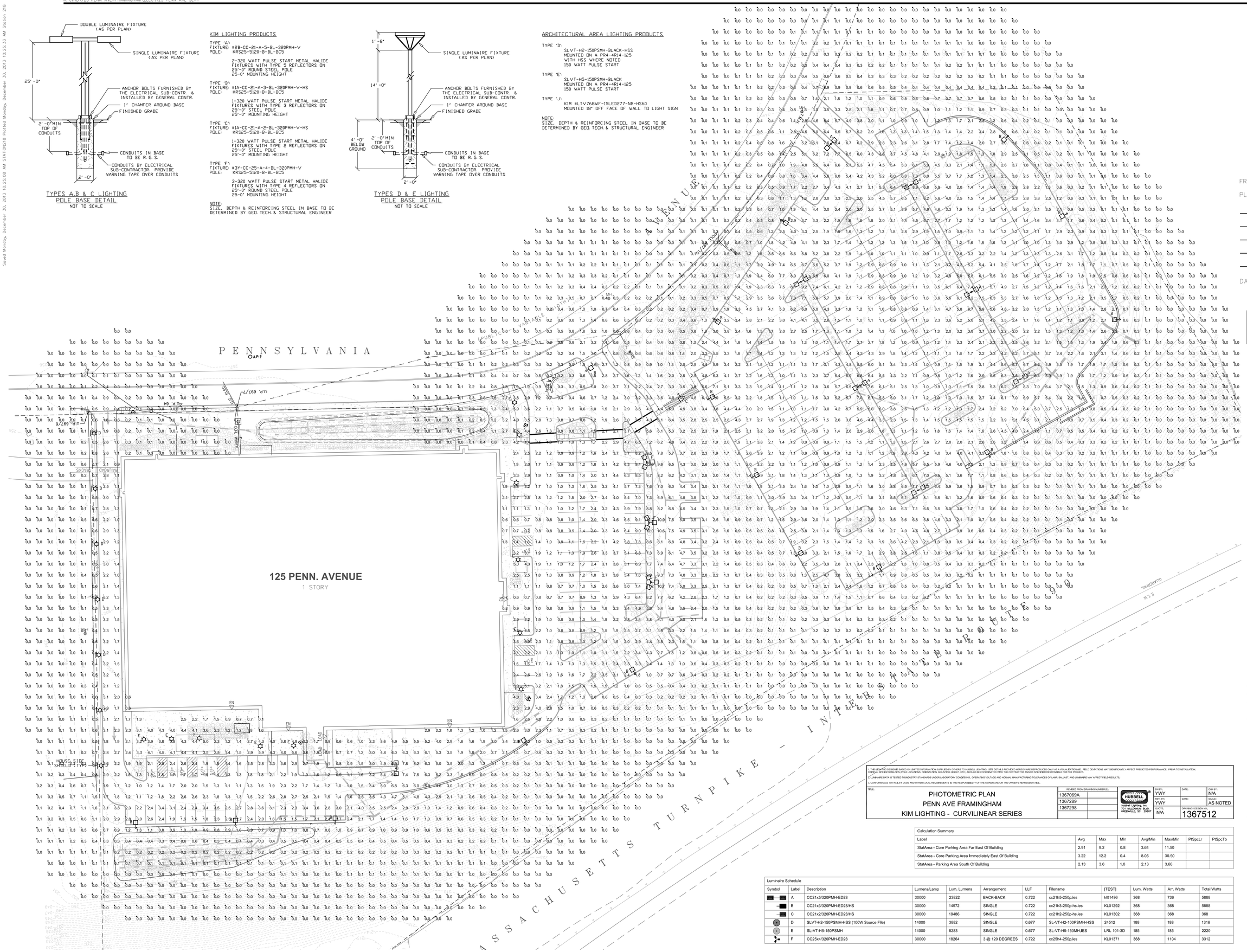

VHB
Vanasse Hangen Brustlin, Inc.
Transportation
Land Development
Environmental Services
99 High Street
Boston, Massachusetts 02110
617.728.7777 • FAX 617.728.7782

FRAMINGHAM PLANNING BOARD
PLAN ENDORSEMENT

DATE OF ENDORSEMENT: _____

ENGINEERING ADVANTAGE, INC.
2 PARK STREET
BOSTON, MASSACHUSETTS 02122
PHONE: (617) 288-3969
FAX: (617) 825-8922

N

30 0 30 60
SCALE IN FEET

No.	Revision	Date	Apprvd.

Designed by LAF | Drawn by CJC | Checked by LAF
CAD checked by | Approved by
Scale 1"=30' | Date December 17, 2013

Project Title
125 Pennsylvania Avenue

125 Pennsylvania Avenue
Framingham, Massachusetts
Issued for

Not Approved for Construction
Drawing Title
SITE PHOTOMETRIC PLAN

Drawing Number
SL-1
Sheet of

Project Number
10734.01

1. THIS LIGHTING DESIGN IS BASED ON LIMITED INFORMATION SUPPLIED BY OTHERS TO HUBBELL LIGHTING. SITE DETAILS PROVIDED HEREON ARE REPRODUCED ONLY AS A VISUALIZATION AID. FIELD DEVIATIONS MAY SIGNIFICANTLY AFFECT PREDICTED PERFORMANCE. PRIOR TO INSTALLATION, OPTICAL SITE INFORMATION (POLE LOCATIONS, ORIENTATION, MOUNTING HEIGHT, ETC.) SHOULD BE COORDINATED WITH THE CONTRACTOR AND/OR SPECIFIER RESPONSIBLE FOR THE PROJECT.
2. LUMINAIRE DATA IS TESTED TO INDUSTRY STANDARDS UNDER LABORATORY CONDITIONS. OPERATING VOLTAGE AND NORMAL MANUFACTURING TOLERANCES OF LAMP, BALLAST, AND LUMINAIRE MAY AFFECT FIELD RESULTS.
3. CONFORMANCE TO FACILITY CODE AND OTHER LOCAL REQUIREMENTS IS THE RESPONSIBILITY OF THE OWNER AND/OR THE OWNER'S REPRESENTATIVE.

TITLE:
PHOTOMETRIC PLAN
PENN AVE FRAMINGHAM
KIM LIGHTING - CURVILINEAR SERIES

REVISED FROM DRAWING NUMBER(S):
1367069A
1367289
1367298

HUBBELL® LIGHTING, INC. 701 MILLENNIUM BLVD. GREENVILLE, SC 29607

DN BY:	DATE:	CHK BY:
YWY		N/A
REV BY:	DATE:	SCALE:
YWY		AS NOTED
QUOTE: N/A	DRAWING / DESIGN NO.: 1367512	

Calculation Summary

Label	Avg	Max	Min	Avg/Min	Max/Min	PtSpcLr	PtSpcTb
StatArea - Core Parking Area Far East Of Building	2.91	9.2	0.8	3.64	11.50		
StatArea - Core Parking Area Immediately East Of Building	3.22	12.2	0.4	8.05	30.50		
StatArea - Parking Area South Of Building	2.13	3.6	1.0	2.13	3.60		

Luminaire Schedule

Symbol	Label	Description	Lumens/Lamp	Lum. Lumens	Arrangement	LLF	Filename	[TEST]	Lum. Watts	Arr. Watts	Total Watts
	A	CC21x5/320PMH-ED28	30000	23822	BACK-BACK	0.722	cc21h5-250p.ies	kl01496	368	736	5888
	B	CC21x3/320PMH-ED28/HS	30000	14572	SINGLE	0.722	cc21h3-250p-hs.ies	KL01292	368	368	5888
	C	CC21x2/320PMH-ED28/HS	30000	19486	SINGLE	0.722	cc21h2-250p-hs.ies	KL01302	368	368	368
	D	SLVT-H2-150PSMH-HSS (100W Source File)	14000	3882	SINGLE	0.677	SL-VT-H2-100PSMH-HSS	24512	188	188	1316
	E	SL-VT-H5-150PSMH	14000	8283	SINGLE	0.677	SL-VT-H5-150MH.IES	LRL 101-3D	185	185	2220
	F	CC25x4/320PMH-ED28	30000	18264	3 @ 120 DEGREES	0.722	cc25h4-250p.ies	KL01371	368	1104	3312

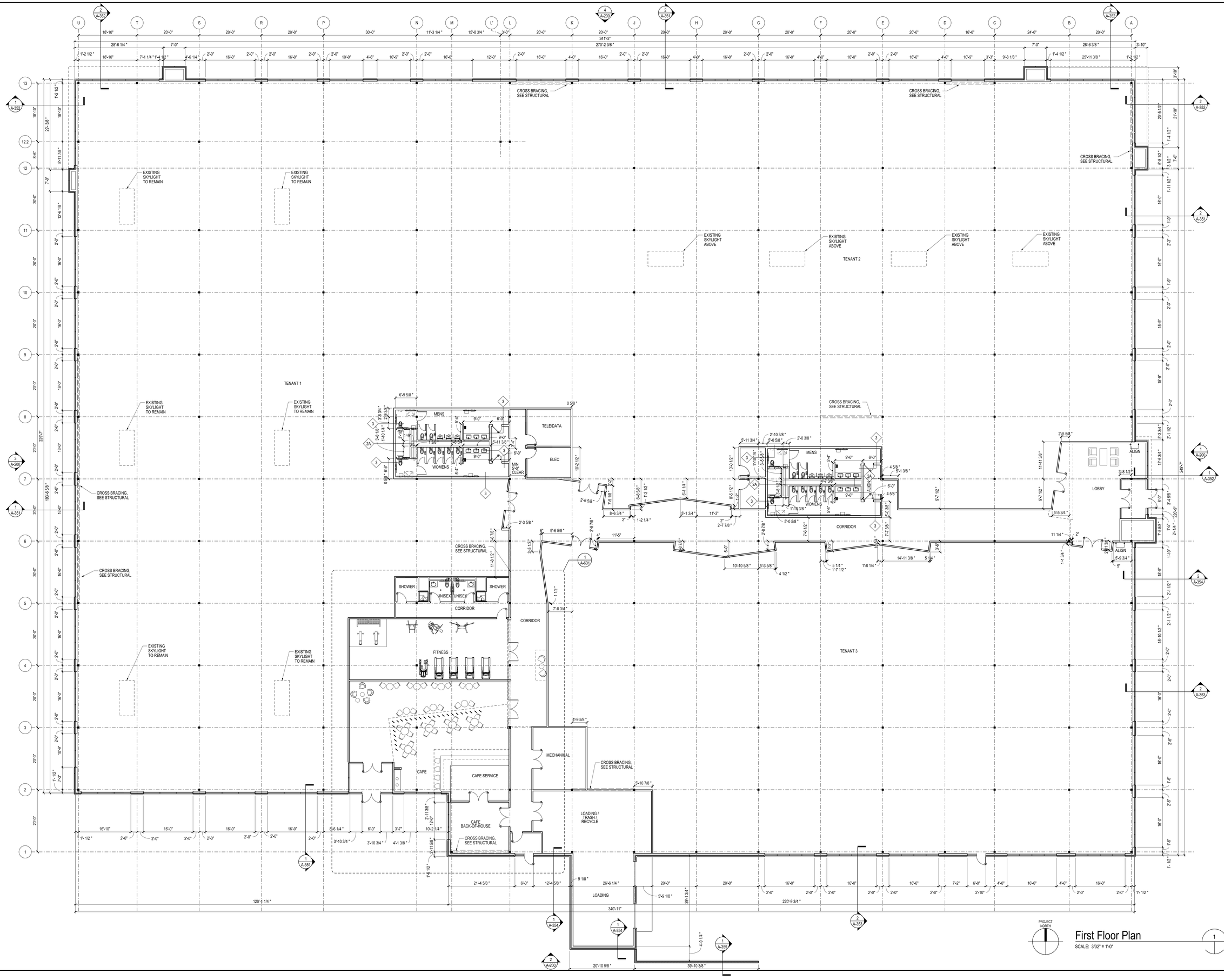

First Floor Plan

SCALE: 3/32" = 1'-0"

CUBE 3 STUDIO
architecture interiors planning
360 Merrimack Street Lawrence, MA 01843
phone: 978.989.9900 www.cube3studio.com

project information:

125 Pennsylvania Avenue

Framingham, MA

client information:

The Congress Group

33 Arch Street, Suite 1100
Boston, MA 02110

consultant information:

FRAMINGHAM PLANNING BOARD
PLAN ENDORSEMENT

DATE OF ENDORSEMENT:

Schematic Design

NOT FOR CONSTRUCTION

drawing information:

drawing by:	
drawing checked by:	
drawing scale:	As Noted
drawing date:	17 December 2013
drawing revisions:	
project number:	

rev.	description	date

registration:

drawing name: First Floor Plan

drawing number: A-101

COPYRIGHT (C) 2013 CUBE 3 STUDIO LLC. ALL RIGHTS RESERVED

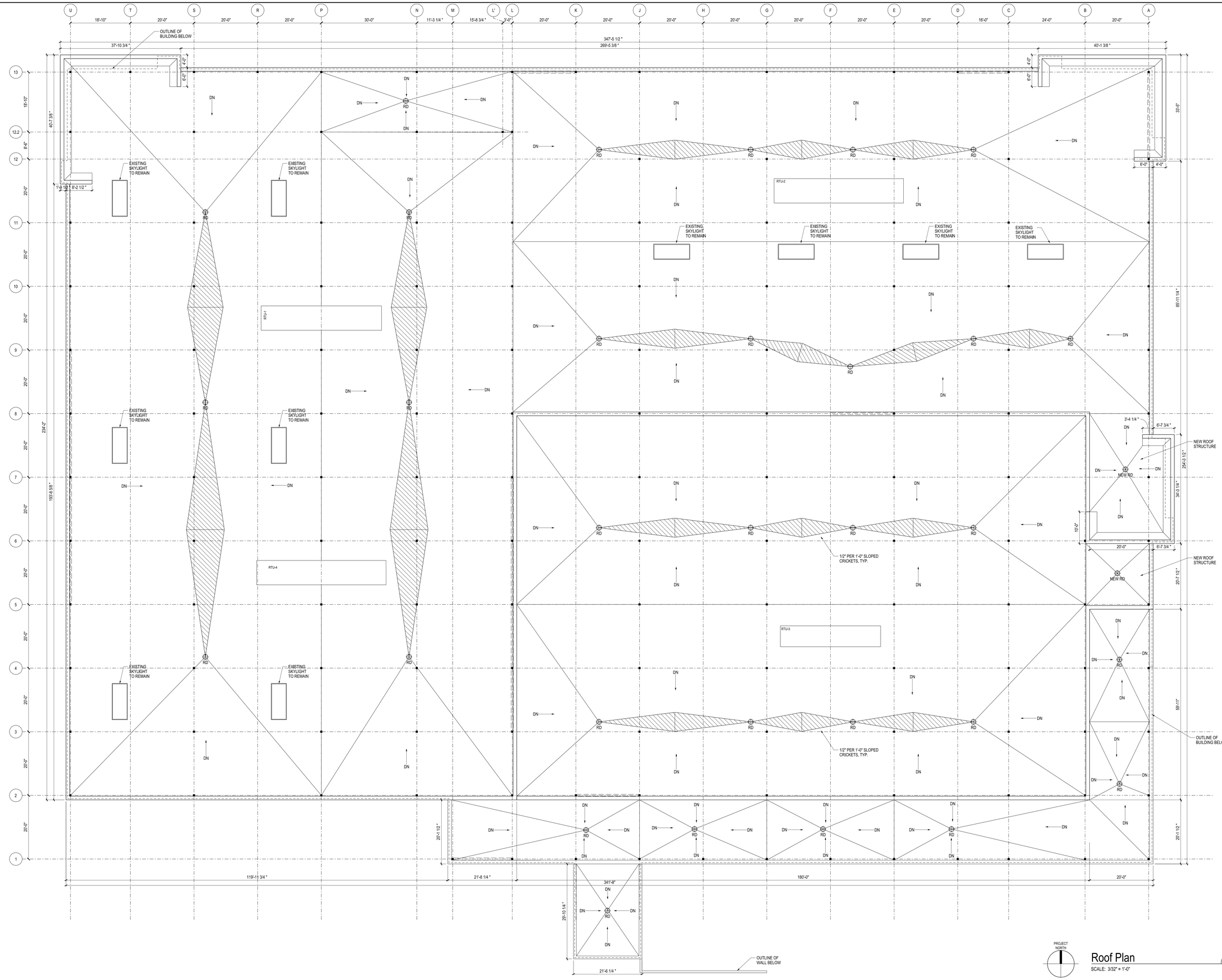

PROJECT NORTH

Roof Plan

SCALE: 3/32" = 1'-0"

1

NOTE: ROOF DRAIN LOCATIONS TO BE VERIFIED IN FIELD

CUBE 3 STUDIO
architecture interiors planning
360 Merrimack Street Lawrence, MA 01843
phone: 978.989.9900 www.cube3studio.com

project information:

125 Pennsylvania Avenue

Framingham, MA

client information:

The Congress Group

33 Arch Street, Suite 1100
Boston, MA 02110

consultant information:

FRAMINGHAM PLANNING BOARD
PLAN ENDORSEMENT

DATE OF ENDORSEMENT:

Schematic Design

NOT FOR CONSTRUCTION

drawing information:

drawing by:
drawing checked by:
drawing scale: As Noted
drawing date: 17 December 2013
drawing revisions:
project number:

rev.	description	date

registration:

drawing name: Roof Plan

drawing number: A-110

COPYRIGHT (C) 2013 CUBE 3 STUDIO LLC. ALL RIGHTS RESERVED

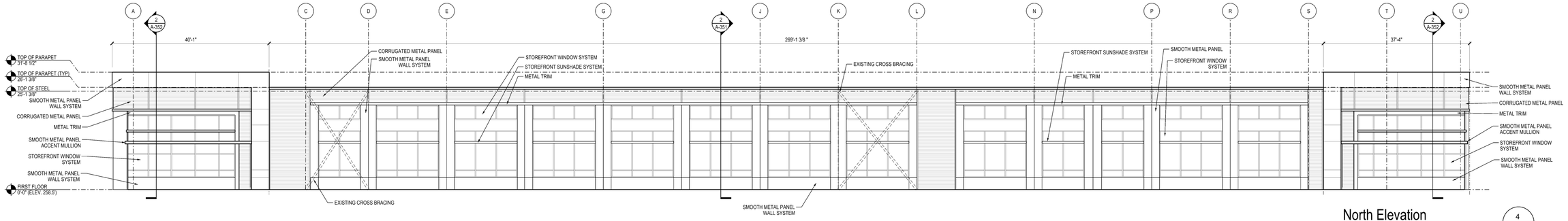

North Elevation 4

SCALE: 3/32" = 1'-0"

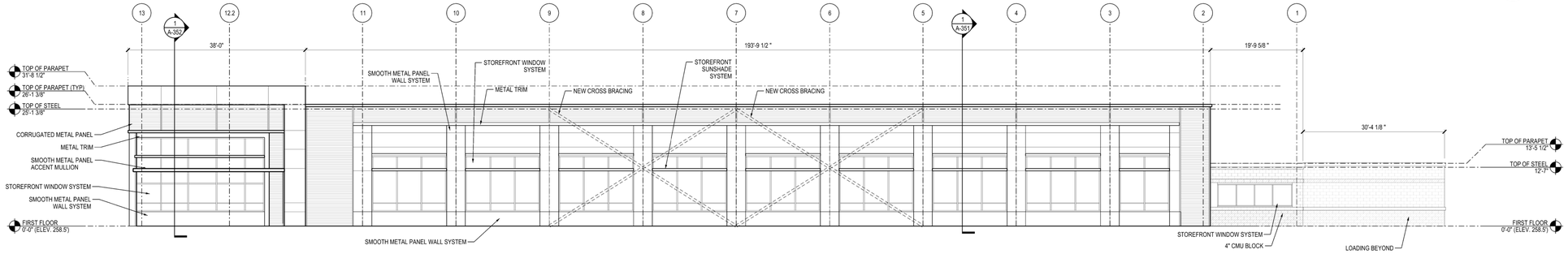

West Elevation 3

SCALE: 3/32" = 1'-0"

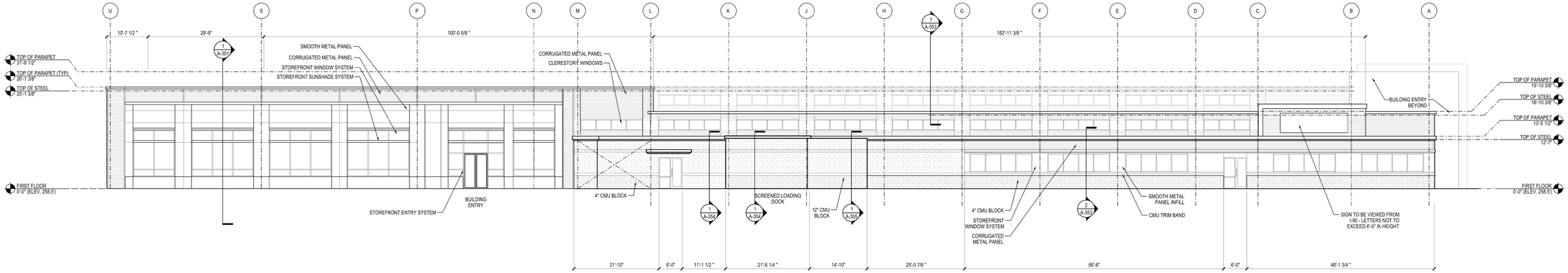

South Elevation 2

SCALE: 3/32" = 1'-0"

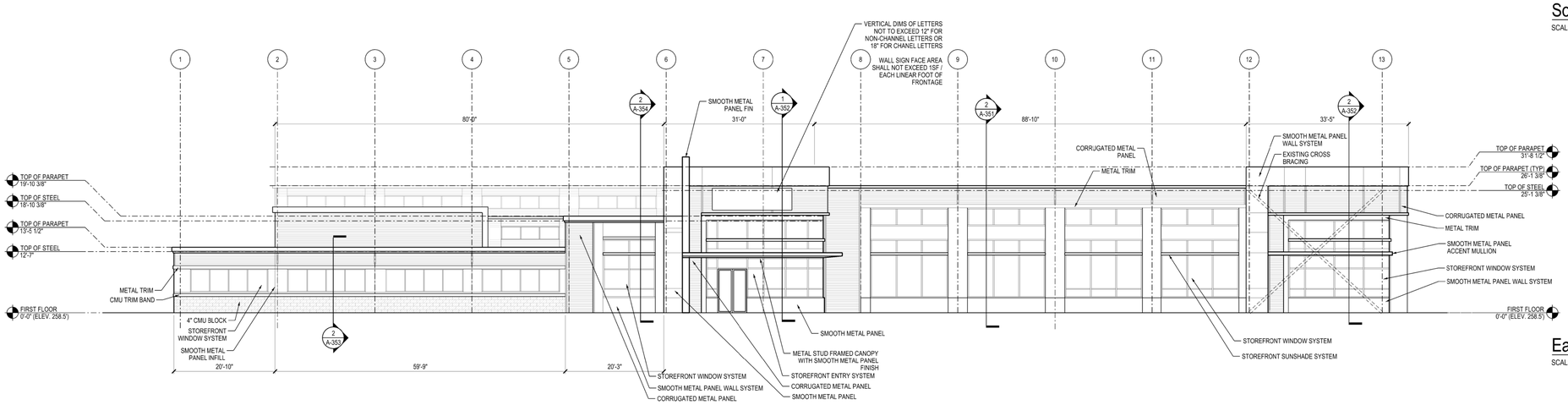

East Elevation 1

SCALE: 3/32" = 1'-0"

CUBE 3 STUDIO
architecture interiors planning
360 Merrimack Street Lawrence, MA 01843
phone: 978.989.9900 www.cube3studio.com

project information:

125 Pennsylvania Avenue

Framingham, MA

client information:

The Congress Group

33 Arch Street, Suite 1100
Boston, MA 02110

consultant information:

FRAMINGHAM PLANNING BOARD
PLAN ENDORSEMENT

DATE OF ENDORSEMENT: _____

Schematic Design

NOT FOR CONSTRUCTION

drawing information:

drawing by:	
drawing checked by:	
drawing scale:	As Noted
drawing date:	17 December 2013
drawing revisions:	
project number:	

rev.	description	date

registration:

drawing name:

Overall Exterior Elevations

drawing number:

A-200

COPYRIGHT (C) 2013 CUBE 3 STUDIO LLC, ALL RIGHTS RESERVED