PLANS TO ACCOMPANY PETITION OF THE TJX COMPANIES, INC.

Site Plan Review
740-770 Cochituate Road
Framingham & Natick, MA
September 9, 2013

APPLICANT
THE TJX COMPANIES, INC.
740/770 Cochituate Road
Framingham, MA 01701
Tel: (508) 390-1000

CIVIL ENGINEER & LANDSCAPE ARCHITECT:
JOHN G. CROWE ASSOCIATES, INC.
Civil Engineering, Landscape Architecture and Environmental Planning
50 Cross Street
Winchester, MA 01890
Tel: (781) 756-0001

LAND SURVEYOR:
WSP - SELLS
Transportation and Infrastructure
155 Main Dunstable Road
Nashua, NH 03060
Tel: (603) 595-7900

ARCHITECT:
PDA ASSOCIATES INC.
16 Huron Drive
Natick MA 01760-1337
Tel: (508) 651-3600

CONSTRUCTION MANAGER:
DACON CORPORATION
16 Huron Drive
Natick MA 01760-1337
Tel: (508) 651-3600

ATTORNEY:
ROPES & GRAY LLP
Prudential Tower, 800 Boylston Street
Boston, MA 02199-3600
Tel: (617) 951-7000

BOWDITCH AND DEWEY
175 Crossing Boulevard, Suite 500
Framingham, MA 01702
Tel: (508) 879-5700

ZONING TABLE

CATEGORY	EXISTING	PERMITTED FRAMINGHAM	PERMITTED NATICK	PROPOSED (1)	COMPLIANT	NOTE
ZONING DISTRICTS Basic Underlying	----------	MANUFACTURING	INDUSTRIAL II	NO CHANGE	----------	
ZONING DISTRICTS Highway Overlay District	----------	HOD REGIONAL CENTER	HOD REGIONAL CENTER	NO CHANGE	----------	
GROSS FLOOR AREA (SF)	750,930. SF	----------	----------	844,855 SF	----------	
LOT DATA						
LOT AREA (SF)	1,701,454. SF	6,000 SF MIN.	80,000 SF MIN.	1,798,824.94 SF	YES	
BUILDING LOT COVERAGE (%)	9.79%	35% MAX.	50% MAX.	11.06%	YES	
TOTAL IMPERVIOUS AREA COVERAGE (%)	52.46%	60% MAX.	----------	53.61%	YES	
FLOOR AREA RATIO (%)	44.25%	62% MAX.	62% MAX.	46.97%	YES	(2)
FRAMINGHAM LANDSCAPE SURFACE RATIO (%)	47.54%	26% MIN.	----------	46.39%	YES	(3)
NATICK LANDSCAPE SURFACE RATIO (%)	49.26%	----------	26% MIN.	48.05%	YES	(3)
LOT COVERAGE BY PARKING	40.92%	----------	----------	40.61%		
INTERIOR PARKING LANDSCAPE (SF PER SPACE)	30 SF PER SPACE	----------	10 SF PER SPACE	30 SF PER SPACE	YES	
AQUIFER PROTECTION DISTRICT IMPERVIOUS	27.50%	----------	20%	27.78%		(4)
PARKING AND DIMENSION DATA						
TOTAL NUMBER OF PARKING SPACES	2,378	2,421	2,175	2,400	NO	(5)
NUMBER OF HANDICAPPED SPACES	35	35	35	37	YES	
LOADING AREAS	16	18	0	19	YES	
FRONTAGE	654.97 FT	50.00 FT MIN.	200 FT MIN.	874.97 FT	YES	
CORPORATE SUPPORT CENTER						
FRONT SETBACK Corporate Support Center	----------	50.00 FT MIN.		85.60 FT.	YES	
SIDE SETBACK Corporate Support Center	----------	15 FT MIN.	----------	16.69 FT	YES	
BUILDING HEIGHT Corporate Support Center	----------	40 FT MAX.	----------	50.50 FT	NO	(6)
NUMBER OF STORIES Corporate Support Center	----------	6 MAX.	----------	3	YES	

NOTES

(1) FOR PURPOSES OF ZONING CALCULATIONS WE HAVE TREATED ALL PARCELS WHICH COMPRISE THE TJX CAMPUS AS ONE PARCEL AND HAVE IGNORED THE TOWN BOUNDARY LINE. THIS IS CONSISTENT WITH HISTORIC TREATMENT OF THE TJX CAMPUS BY PERMITTING BOARDS IN BOTH TOWNS. UNDERLYING ZONING REQUIREMENTS IN EACH TOWN, IF IN CONFLICT ARE NOTED ON THE CHART.
(2) VARIANCE ALLOWS FAR OF 0.62 ON TJX CAMPUS.
(3) VARIANCE ALLOWS LSR OF 0.26 ON TJX CAMPUS.
(4) SPECIAL PERMIT REQUIRED.
(5) EXISTING SPECIAL PERMITS REQUIRE 2,421 SPACES TO SERVE THE TJX CAMPUS. NEW OR MODIFIED SPECIAL PERMIT NEEDED TO AUTHORIZE PROPOSAL FOR 2,400 SPACES.
(6) A WAIVER FROM THE PLANNING BOARD IS REQUIRED.

DRAWING LIST:

No:	Name
SPA-1	Cover Sheet
SPA-2	Locus Plan
SPA-3	Existing Conditions Plan
SPA-4	Site Statistics Plan
SPA-5	Proposed Erosion Control & Site Prepa
SPA-6	Proposed Grading Plan
SPA-7	Proposed Drainage & Utilities Plan
SPA-8	Proposed Parking, Layout & Materials
SPA-9	Proposed Planting Plan
SPA-10	Site Details
SPA-11	Site Details
SPA-12	Site Details
SPA-13	Site Details
SPA-14	Site Details
SPA-15	Site Details
ALTA/ACSM Land Title Survey Plan - Sheets 1-4 (f	
A1.2	First Floor Plan
A1.3	Second Floor Plan
A1.4	Third Floor Plan
A2.3	Elevations
A2.4	Elevations
A3.0	Roof Plan
PH 1	Photometry - Site Lighting
PH 2	Photometry - Fixture Specifications

I,
CLERK OF THE TOWN OF FR
APPROVAL FROM THE PLAN
ON
FOR TWENTY (20) DAYS THE
APPEAL PERIOD ENDED ON

FRAMINGHA
SIT

DATE

THIS DOCUMENT OF THE PL
CONSTRUED TO BE DETERM
ZONING REGULATIONS.

CLERK OF THE TOWN OF FRAMINGHAM, RECEIVED AND RECORDED APPROVAL FROM THE PLANNING BOARD OF THIS PLAN ON _____ AND NO APPEAL WAS TAKEN FOR TWENTY (20) DAYS THEREAFTER. SAID TWENTY (20) DAY APPEAL PERIOD ENDED ON _____

FRAMINGHAM PLANNING BOARD
SITE PLAN REVIEW

_____

_____

_____

_____

_____

_____

_____

DATE: _____

THIS DOCUMENT OF THE PLANNING BOARD SHOULD BE CONSTRUED TO BE DETERMINATION OF CONFORMANCE WITH ZONING REGULATIONS.

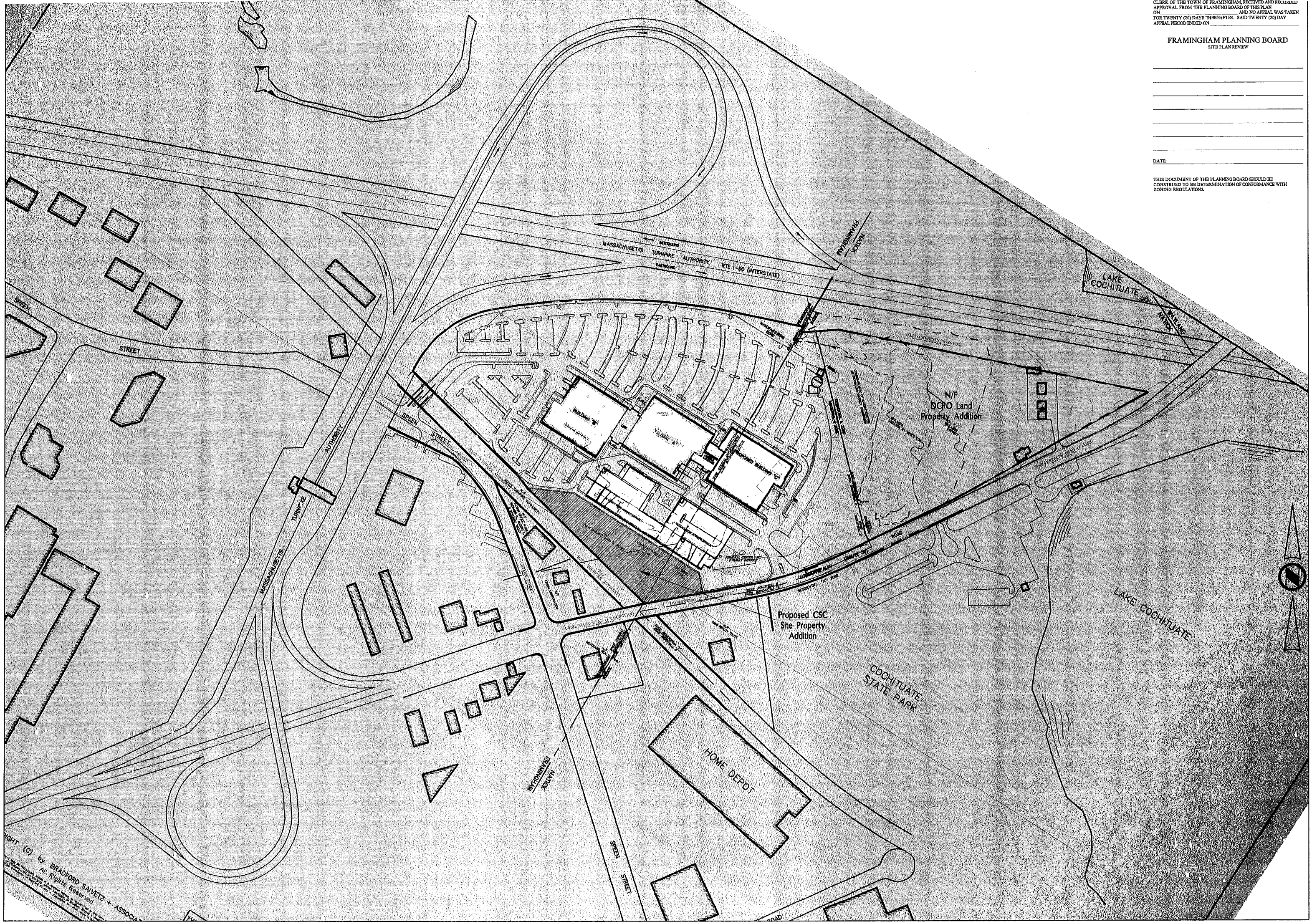
MASSACHUSETTS TURNPIKE AUTHORITY RTE I-90 (INTERSTATE)
EASTBOUND
WESTBOUND
FRAMINGHAM
NATICK
LAKE COCHITUATE
WETLAND
SPEEN STREET
AUTHORITY
MASSACHUSETTS TURNPIKE
N/F DCPO Land Property Addition
Proposed CSC Site Property Addition
COCHITUATE STATE PARK
HOME DEPOT
LAKE COCHITUATE
BUILDING 'B'
BUILDING 'C'
BUILDING 'D'
PARKING AREA
PROPOSED BUILDING 'E'
PROPOSED PARKING AREA
PROPOSED PARKING AREA
PROPOSED PARKING AREA

I,
CLERK OF THE TOWN OF FRAMINGHAM, RECEIVED AND RECORDED APPROVAL FROM THE PLANNING BOARD OF THIS PLAN ON _____ AND NO APPEAL WAS TAKEN FOR TWENTY (20) DAYS THEREAFTER. SAID TWENTY (20) DAY APPEAL PERIOD ENDED ON _____

FRAMINGHAM PLANNING BOARD
SITE PLAN REVIEW

_____
_____
_____
_____
_____
_____
_____

DATE: _____

THIS DOCUMENT OF THE PLANNING BOARD SHOULD BE CONSTRUED TO BE DETERMINATION OF CONFORMANCE WITH ZONING REGULATIONS.

LEGEND

- IRON ROD FOUND
- SBDH STONE BOUND WITH DRILL HOLE
- ROUND CATCH BASIN
- CATCH BASIN
- DRAIN MANHOLE
- SEWER MANHOLE
- NO LABEL MANHOLE
- TELEPHONE MANHOLE
- ELECTRIC MANHOLE
- E ELECTRIC HANDHOLE
- ELECTIC BOX
- E ELECTRIC METER
- IRRIGATION CONTROL VALVE
- GAS METER
- HYDRANT
- FDC FIRE DEPARTMENT CONNECTION
- F FIRE ALARM BOX
- WATER GATE
- GAS VALVE
- LIGHT POLE
- GROUND LIGHT
- SPOT GRADE
- UTILITY POLE
- UTILITY POLE WITH LIGHT
- UTILITY POLE WITH RISER
- DECIDUOUS TREE
- CONIFER TREE
- SHRUB
- POST
- SIGN (DOUBLE POSTED)
- SIGN (SINGLE POSTED)
- BOLLARD
- COLUMN
- EP EDGE OF PAVEMENT
- EC EDGE OF CONCRETE
- EG EDGE OF GRAVEL
- BC BITUMINOUS CURB
- GC GRANITE CURB
- CC CONCRETE CURB
- RWB RETAINING WALL BRICK
- RWC RETAINING WALL CONCRETE
- CLF CHAIN LINK FENCE
- BORING
- TEST PIT
- WOOD FENCE
- CHAIN LINK FENCE
- OHW OVERHEAD WIRES
- TREE LINE
- 148 INTERMEDIATE CONTOURS
- 150 INDEX CONTOURS
- PROPERTY LINE
- ABUTTERS LINE
- TOWN LINE
- C CABLE LINE
- W WATER LINE
- E ELECTRIC LINE
- G GAS LINE
- S SEWER LINE
- D DRAIN LINE
- BUILDING OVERHANG
- SHRUB LINE

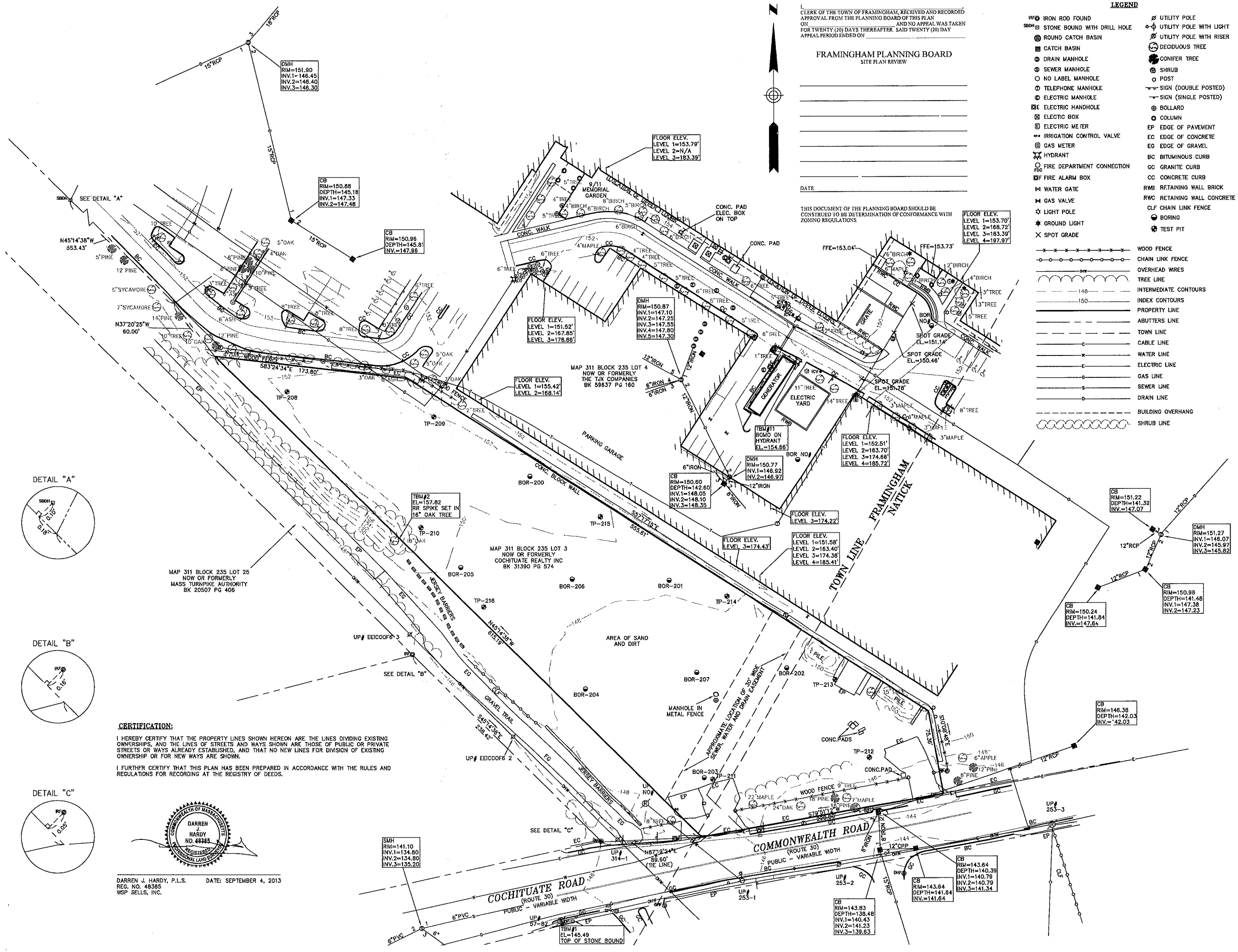

CERTIFICATION:

I HEREBY CERTIFY THAT THE PROPERTY LINES SHOWN HEREON ARE THE LINES DIVIDING EXISTING OWNERSHIPS, AND THE LINES OF STREETS AND WAYS SHOWN ARE THOSE OF PUBLIC OR PRIVATE STREETS OR WAYS ALREADY ESTABLISHED, AND THAT NO NEW LINES FOR DIVISION OF EXISTING OWNERSHIP OR FOR NEW WAYS ARE SHOWN.

I FURTHER CERTIFY THAT THIS PLAN HAS BEEN PREPARED IN ACCORDANCE WITH THE RULES AND REGULATIONS FOR RECORDING AT THE REGISTRY OF DEEDS.

COMMONWEALTH OF MASSACHUSETTS
DARREN J. HARDY
NO. 48385
REGISTERED PROFESSIONAL LAND SURVEYOR

DARREN J. HARDY, P.L.S. DATE: SEPTEMBER 4, 2013
REG. NO. 48385
WSP SELLS, INC.

123126-2.dwg

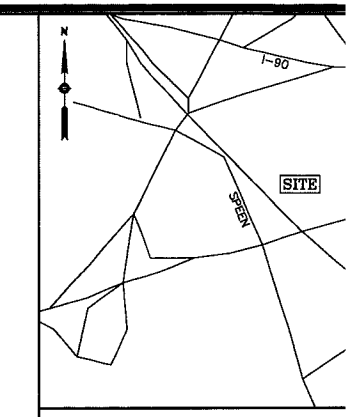

LOCUS MAP
(N.T.S.)

NOTES

1. THIS PLAN WAS PREPARED FROM AN ACTU SURVEY CONDUCTED BY WSP SELLS ON OCT APRIL 24, 2013, APRIL 25, 2013 AND JULY
2. THE HORIZONTAL DATUM SHOWN HEREON MASSACHUSETTS STATE PLANE COORDINATE
3. THE VERTICAL DATUM SHOWN HEREON REF
4. THE BORINGS AND TEST PITS SHOWN HERE LOCATIONS WHICH WERE FIELD STAKED BY W
5. THE LOCATION OF THE TOWN LINE SHOWN AN ACTUAL FIELD SURVEY. THE TOWN LINE S HELD AND VALIDATED USING GPS AND CONVE TOWN LINE MONUMENT F-N1 AND THE WITNE LOCATED IN THIS SURVEY.

PLAN REFERENCES

1. "PLAN OF LAND IN FRAMINGHAM & NATICH GENERAZIO REALTY TRUST" PREPARED BY BR ASSOCIATES" INC DATED MAY 7, 1962 AND R REGISTRY OF DEEDS SOUTH DISTRICT AS PLA OF 1962.
2. "PLAN OF LAND IN FRAMINGHAM & NATICH GENERAZIO REALTY TRUST & ZAYRE CORPOR BRADFORD SAIVETZ & ASSOCIATES INC DATE RECORDED AT THE MIDDLESEX REGISTRY OF PLAN NUMBER 853 (A OF 4) OF 1986.
3. "PLAN FOR THE LOCATION OF AN ACCESS BY MASSACHUSETTS TURNPIKE AUTHORITY IN MASSACHUSETTS MIDDLESEX COUNTY" PREPA ENGINEERING DATED DECEMBER 23, 2003 AN MIDDLESEX REGISTRY OF DEEDS SOUTH DISTR OF 2004
4. "PLAN OF LAND IN FRAMINGHAM MASSACH TOSCO MARKETING" PREPARED BY MERRIMAC DATED APRIL 13, 2000 AND RECORDED AT T DEEDS SOUTH DISTRICT AS PLAN NUMBER 48
5. TOWN LINE INFORMATION COMPILED FROM AND PERAMBULATION REPORTS FROM THE TO AND NATICK, MA DATED DECEMBER 5, 2012.

UTILITY STATEMENTS

THE LOCATION OF THE UTILITIES AS SHOWN COMPILED FROM VISIBLE STRUCTURES AND VARIOUS SOURCES. THE ACTUAL LOCATION UNDERGROUND STRUCTURES SHALL BE CONS SHALL BE VERIFIED BY THE OWNER PRIOR T SURVEYOR MAKES NO GUARANTEES THAT TH SHOWN COMPRISE ALL SUCH UTILITIES IN TH OR ABANDONED. THE SURVEYOR FURTHER D THE UNDERGROUND UTILITIES SHOWN ARE IN INDICATED.

GRAPHIC SC

40 0 20 40 8

(IN FEET)
1 inch = 40 f

REV.4	ADDED TEST PITS, SUBSUR SURFACE UTILITIES
REV.3	ADDED TOPO AND SUBSURI DEFINED LOCATION OF TOW
REV.2	ADDED BORINGS, TEST PITS ELEVATIONS AND SPOT GR
REV.1	ADDED TOPO AND FLOOR E

EXISTING CONDITIO

740 COCHITUAT
FRAMINGHAM, MASS
PREPARED
THE TJX COMPAN

WSP
Transportation &

155 Main Dunstable Rd. Suites 120 & 125 • Nas
www.wspsells.com

Drawn By	MS	NOVEM
Surveyed By	MC,TO,BG	
Checked By	DJH	
Book No.	N253	1"

APPROVAL FROM THE PLANNING BOARD OF THIS PLAN
ON _____ AND NO APPEAL WAS TAKEN
FOR TWENTY (20) DAYS THEREAFTER. SAID TWENTY (20) DAY
APPEAL PERIOD ENDED ON _____

FRAMINGHAM PLANNING BOARD
SITE PLAN REVIEW

_____
_____
_____
_____
_____
_____
_____

DATE: _____

THIS DOCUMENT OF THE PLANNING BOARD SHOULD BE CONSTRUED TO BE DETERMINATION OF CONFORMANCE WITH ZONING REGULATIONS.

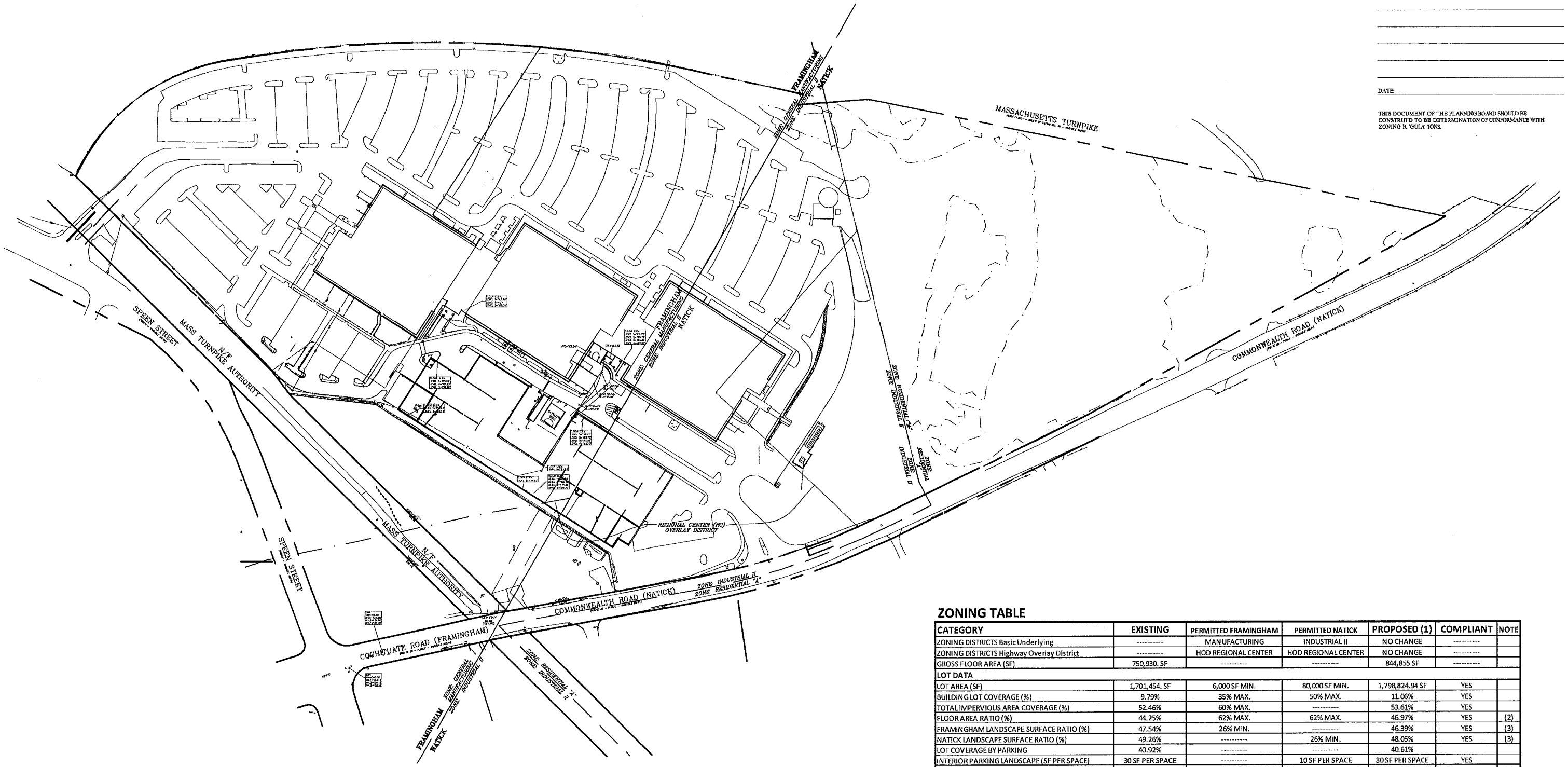

ZONING TABLE

CATEGORY	EXISTING	PERMITTED FRAMINGHAM	PERMITTED NATICK	PROPOSED (1)	COMPLIANT	NOTE
ZONING DISTRICTS Basic Underlying	----------	MANUFACTURING	INDUSTRIAL II	NO CHANGE	----------	
ZONING DISTRICTS Highway Overlay District	----------	HOD REGIONAL CENTER	HOD REGIONAL CENTER	NO CHANGE	----------	
GROSS FLOOR AREA (SF)	750,930. SF	----------	----------	844,855 SF	----------	
LOT DATA						
LOT AREA (SF)	1,701,454. SF	6,000 SF MIN.	80,000 SF MIN.	1,798,824.94 SF	YES	
BUILDING LOT COVERAGE (%)	9.79%	35% MAX.	50% MAX.	11.06%	YES	
TOTAL IMPERVIOUS AREA COVERAGE (%)	52.46%	60% MAX.	----------	53.61%	YES	
FLOOR AREA RATIO (%)	44.25%	62% MAX.	62% MAX.	46.97%	YES	(2)
FRAMINGHAM LANDSCAPE SURFACE RATIO (%)	47.54%	26% MIN.	----------	46.39%	YES	(3)
NATICK LANDSCAPE SURFACE RATIO (%)	49.26%	----------	26% MIN.	48.05%	YES	(3)
LOT COVERAGE BY PARKING	40.92%	----------	----------	40.61%		
INTERIOR PARKING LANDSCAPE (SF PER SPACE)	30 SF PER SPACE	----------	10 SF PER SPACE	30 SF PER SPACE	YES	
AQUIFER PROTECTION DISTRICT IMPERVIOUS	27.50%	----------	20%	27.78%		(4)
PARKING AND DIMENSION DATA						
TOTAL NUMBER OF PARKING SPACES	2,378	2,421	2,175	2,400	NO	(5)
NUMBER OF HANDICAPPED SPACES	35	35	35	27	YES	
LOADING AREAS	16	18	0	19	YES	
FRONTAGE	654.97 FT	50.00 FT MIN.	200 FT MIN.	874.97 FT	YES	
CORPORATE SUPPORT CENTER						
FRONT SETBACK Corporate Support Center	----------	50.00 FT MIN.		85.60 FT.	YES	
SIDE SETBACK Corporate Support Center	----------	15 FT MIN.	----------	16.69 FT	YES	
BUILDING HEIGHT Corporate Support Center	----------	40 FT MAX.	----------	50.50 FT	NO	(6)
NUMBER OF STORIES Corporate Support Center	----------	6 MAX.	----------	3	YES	

NOTES

(1) FOR PURPOSES OF ZONING CALCULATIONS WE HAVE TREATED ALL PARCELS WHICH COMPRISE THE TJX CAMPUS AS ONE PARCEL AND HAVE IGNORED THE TOWN BOUNDARY LINE. THIS IS CONSISTENT WITH HISTORIC TREATMENT OF THE TJX CAMPUS BY PERMITTING BOARDS IN BOTH TOWNS. UNDERLYING ZONING REQUIREMENTS IN EACH TOWN, IF IN CONFLICT ARE NOTED ON THE CHART.
(2) VARIANCE ALLOWS FAR OF 0.62 ON TJX CAMPUS.
(3) VARIANCE ALLOWS LSR OF 0.26 ON TJX CAMPUS.
(4) SPECIAL PERMIT REQUIRED.
(5) EXISTING SPECIAL PERMITS REQUIRE 2,421 SPACES TO SERVE THE JX CAMPUS. NEW OR MODIFIED SPECIAL PERMIT NEEDED TO AUTHORIZE PROPOSAL FOR 2,400 SPACES.
(6) A WAIVER FROM THE PLANNING BOARD IS REQUIRED.

NOTES

1. See SPR-7 "Site Layout Plan" for additional site plan layout dimensions.

Copyright John G. Crane, Associates Inc. 2013

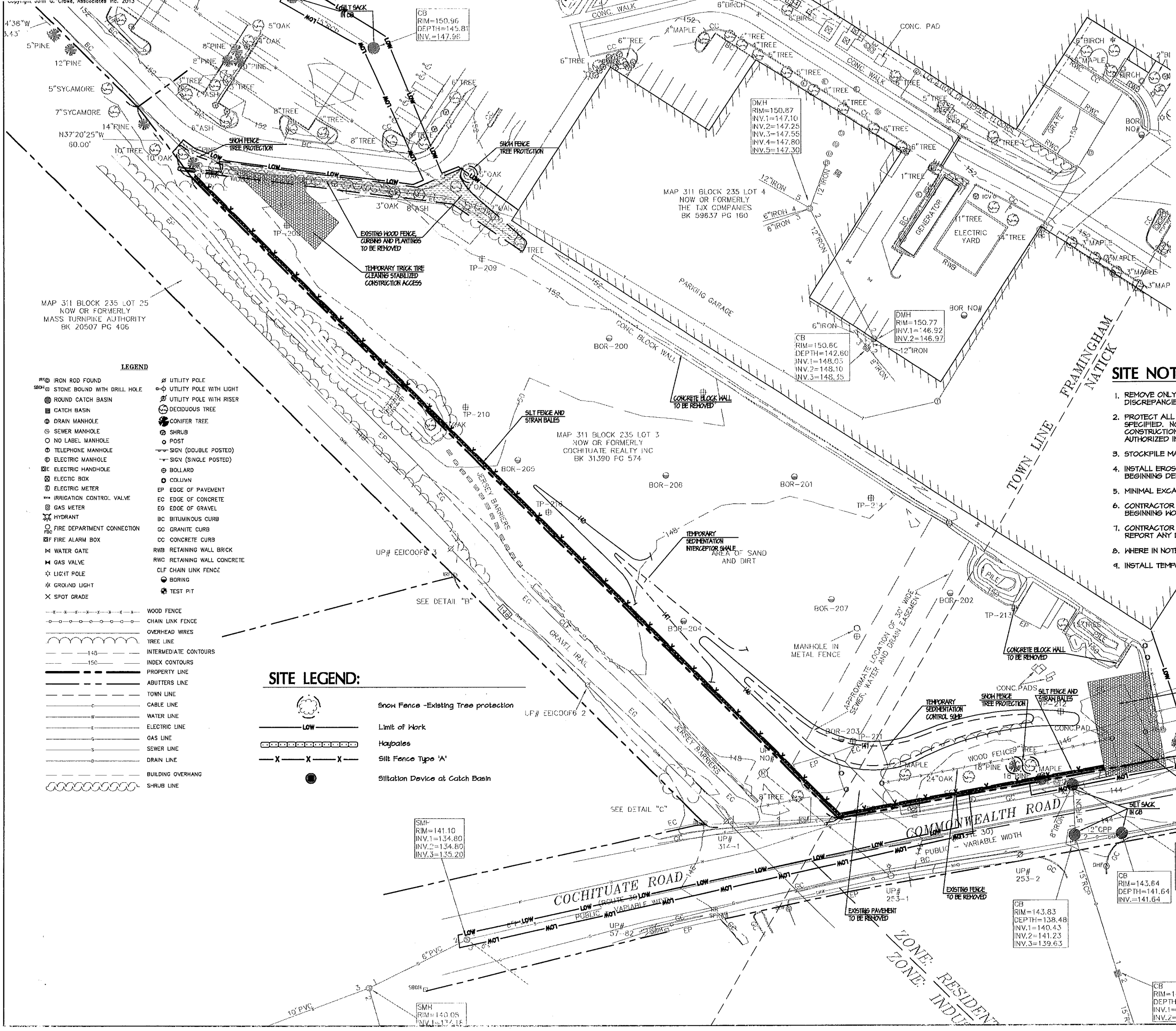

LEGEND

- IRF IRON ROD FOUND
- SBDH STONE BOUND WITH DRILL HOLE
- ROUND CATCH BASIN
- CATCH BASIN
- DRAIN MANHOLE
- SEWER MANHOLE
- NO LABEL MANHOLE
- TELEPHONE MANHOLE
- ELECTRIC MANHOLE
- E ELECTRIC HANDHOLE
- ELECTRIC BOX
- E ELECTRIC METER
- IRRIGATION CONTROL VALVE
- GAS METER
- HYDRANT
- FDC FIRE DEPARTMENT CONNECTION
- F FIRE ALARM BOX
- WATER GATE
- GAS VALVE
- LIGHT POLE
- GROUND LIGHT
- SPOT GRADE
- UTILITY POLE
- UTILITY POLE WITH LIGHT
- UTILITY POLE WITH RISER
- DECIDUOUS TREE
- CONIFER TREE
- SHRUB
- POST
- SIGN (DOUBLE POSTED)
- SIGN (SINGLE POSTED)
- BOLLARD
- COLUMN
- EP EDGE OF PAVEMENT
- EC EDGE OF CONCRETE
- EG EDGE OF GRAVEL
- BC BITUMINOUS CURB
- GC GRANITE CURB
- CC CONCRETE CURB
- RWB RETAINING WALL BRICK
- RWC RETAINING WALL CONCRETE
- CLF CHAIN LINK FENCE
- BORING
- TEST PIT
- WOOD FENCE
- CHAIN LINK FENCE
- OVERHEAD WIRES
- TREE LINE
- 148 INTERMEDIATE CONTOURS
- 150 INDEX CONTOURS
- PROPERTY LINE
- ABUTTERS LINE
- TOWN LINE
- C CABLE LINE
- W WATER LINE
- E ELECTRIC LINE
- G GAS LINE
- S SEWER LINE
- D DRAIN LINE
- BUILDING OVERHANG
- SHRUB LINE

SITE LEGEND:

- Snow Fence -Existing Tree protection
- LOW Limit of Work
- Haybales
- X X X Silt Fence Type 'A'
- Siltation Device at Catch Basin

CLERK OF THE TOWN OF FRAMINGHAM, RECEIVED AND RECORDED APPROVAL FROM THE PLANNING BOARD OF THIS PLAN ON _____ AND NO APPEAL WAS TAKEN FOR TWENTY (20) DAYS THEREAFTER. SAID TWENTY (20) DAY APPEAL PERIOD ENDED ON _____

FRAMINGHAM PLANNING BOARD
SITE PLAN REVIEW

_____

_____

_____

_____

_____

_____

_____

DATE: _____

THIS DOCUMENT OF THE PLANNING BOARD SHOULD BE CONSTRUED TO BE DETERMINATION OF CONFORMANCE WITH ZONING REGULATIONS.

SITE NOTES:

1. REMOVE ONLY THOSE AREAS OR ITEMS NOTED ON THIS DRAWING. REPORT ANY DISCREPANCIES TO THE ARCHITECT.
2. PROTECT ALL TREES TO REMAIN PRIOR TO BEGINNING DEMOLITION ACTIVITIES AS SPECIFIED. NO STOCKPILING OF MATERIALS, PARKING OF VEHICLES, OR ANY OTHER CONSTRUCTION ACTIVITIES SHALL OCCUR WITHIN PROTECTED AREAS UNLESS AUTHORIZED IN WRITING BY THE ARCHITECT.
3. STOCKPILE MATERIALS IN AN APPROVED LOCATION ONLY.
4. INSTALL EROSION CONTROL MEASURES AS INDICATED ON GRADING PLAN PRIOR TO BEGINNING DEMOLITION ACTIVITIES.
5. MINIMAL EXCAVATION OF MATERIALS ALLOWED WITHIN CANOPY OF TREES TO REMAIN
6. CONTRACTOR SHALL VERIFY LOCATION OF ALL UNDERGROUND UTILITIES PRIOR TO BEGINNING WORK.
7. CONTRACTOR SHALL VERIFY ALL EXISTING SURVEY INFORMATION IN THE FIELD AND REPORT ANY DISCREPANCIES TO THE LANDSCAPE ARCHITECT.
8. WHERE IN NOTED 'LANDSCAPE ARCHITECT' (LA) SHALL MEAN 'ARCHITECT'
9. INSTALL TEMPORARY CONSTRUCTION FENCE AS NECESSARY AND WHERE REQUIRED

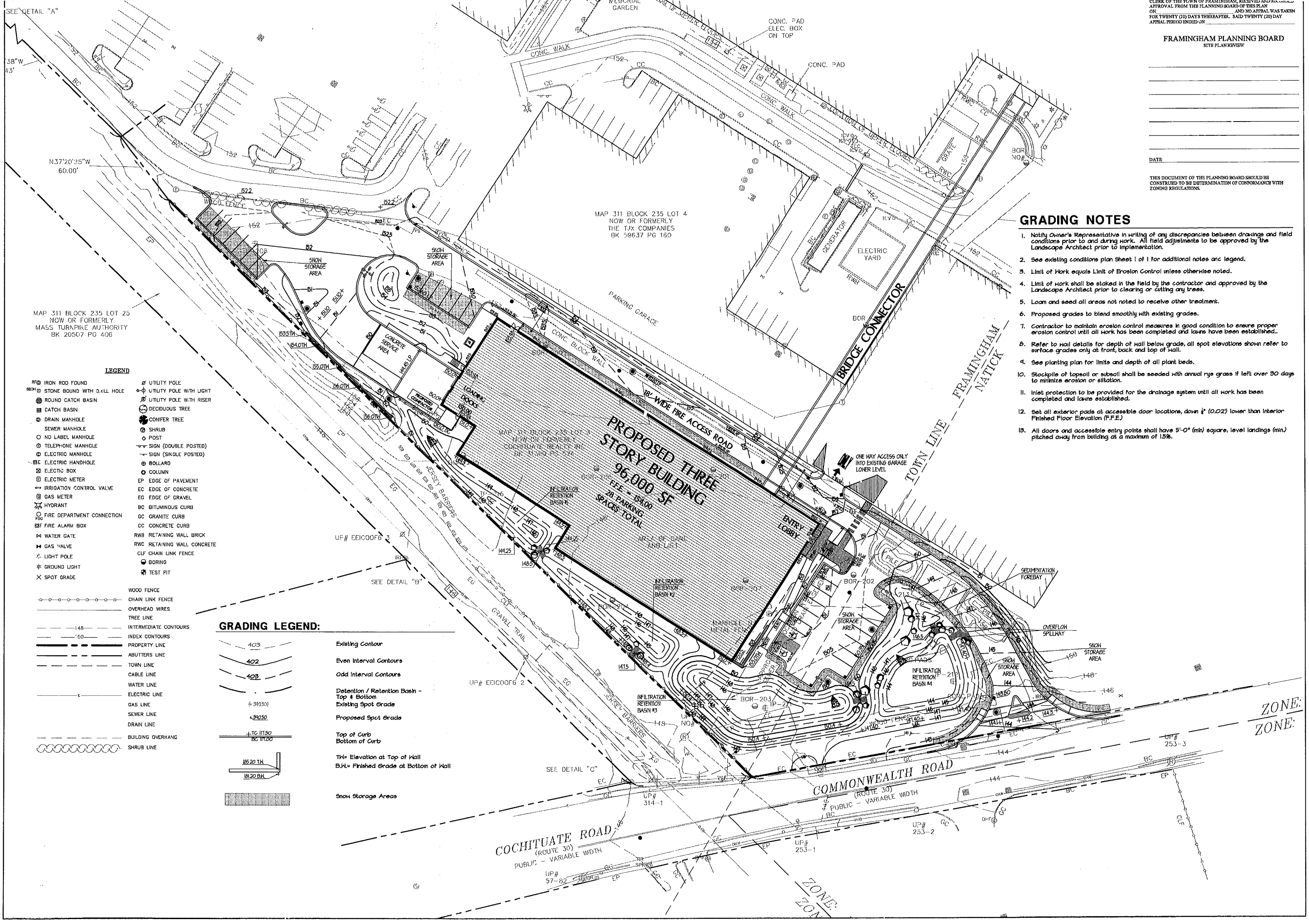

CLERK OF THE TOWN OF FRAMINGHAM, RECEIVED AND RECORDED APPROVAL FROM THE PLANNING BOARD OF THIS PLAN ON _____ AND NO APPEAL WAS TAKEN FOR TWENTY (20) DAYS THEREAFTER. SAID TWENTY (20) DAY APPEAL PERIOD ENDED ON _____

FRAMINGHAM PLANNING BOARD
SITE PLAN REVIEW

DATE: _____

THIS DOCUMENT OF THE PLANNING BOARD SHOULD BE CONSTRUED TO BE DETERMINATION OF CONFORMANCE WITH ZONING REGULATIONS.

GRADING NOTES

1. Notify Owner's Representative in writing of any discrepancies between drawings and field conditions prior to and during work. All field adjustments to be approved by the Landscape Architect prior to implementation.
2. See existing conditions plan Sheet 1 of 1 for additional notes and legend.
3. Limit of Work equals Limit of Erosion Control unless otherwise noted.
4. Limit of Work shall be staked in the field by the contractor and approved by the Landscape Architect prior to clearing or cutting any trees.
5. Loam and seed all areas not noted to receive other treatment.
6. Proposed grades to blend smoothly with existing grades.
7. Contractor to maintain erosion control measures in good condition to ensure proper erosion control until all work has been completed and lawns have been established..
8. Refer to wall details for depth of wall below grade, all spot elevations shown refer to surface grades only at front, back and top of wall.
9. See planting plan for limits and depth of all plant beds.
10. Stockpile of topsoil or subsoil shall be seeded with annual rye grass if left over 30 days to minimize erosion or siltation.
11. Inlet protection to be provided for the drainage system until all work has been completed and lawns established.
12. Set all exterior pads at accessible door locations, down ¼" (0.02) lower than interior Finished Floor Elevation (F.F.E.)
13. All doors and accessible entry points shall have 5'-0" (min) square, level landings (min.) pitched away from building at a maximum of 1.5%.

LEGEND

- IRON ROD FOUND
- STONE BOUND WITH DRILL HOLE
- ROUND CATCH BASIN
- CATCH BASIN
- DRAIN MANHOLE
- SEWER MANHOLE
- NO LABEL MANHOLE
- TELEPHONE MANHOLE
- ELECTRIC MANHOLE
- ELECTRIC HANDHOLE
- ELECTIC BOX
- ELECTRIC METER
- IRRIGATION CONTROL VALVE
- GAS METER
- HYDRANT
- FIRE DEPARTMENT CONNECTION
- FIRE ALARM BOX
- WATER GATE
- GAS VALVE
- LIGHT POLE
- GROUND LIGHT
- SPOT GRADE
- UTILITY POLE
- UTILITY POLE WITH LIGHT
- UTILITY POLE WITH RISER
- DECIDUOUS TREE
- CONIFER TREE
- SHRUB
- POST
- SIGN (DOUBLE POSTED)
- SIGN (SINGLE POSTED)
- BOLLARD
- COLUMN
- EP EDGE OF PAVEMENT
- EC EDGE OF CONCRETE
- EG EDGE OF GRAVEL
- BC BITUMINOUS CURB
- GC GRANITE CURB
- CC CONCRETE CURB
- RWB RETAINING WALL BRICK
- RWC RETAINING WALL CONCRETE
- CLF CHAIN LINK FENCE
- BORING
- TEST PIT
- WOOD FENCE
- CHAIN LINK FENCE
- OVERHEAD WIRES
- TREE LINE
- INTERMEDIATE CONTOURS
- INDEX CONTOURS
- PROPERTY LINE
- ABUTTERS LINE
- TOWN LINE
- CABLE LINE
- WATER LINE
- ELECTRIC LINE
- GAS LINE
- SEWER LINE
- DRAIN LINE
- BUILDING OVERHANG
- SHRUB LINE

GRADING LEGEND:

- 403 — Existing Contour
- 402 — Even Interval Contours
- 403 — Odd Interval Contours
- Detention / Retention Basin - Top & Bottom
- (+ 34.50) — Existing Spot Grade
- + 34.50 — Proposed Spot Grade
- + TC 117.50 / BC 117.00 — Top of Curb / Bottom of Curb
- 185.20 TW / 181.20 BW — TW= Elevation at Top of Wall / B.W.= Finished Grade at Bottom of Wall
- Snow Storage Areas

Copyright John G. Crowe, Associates Inc. 2013

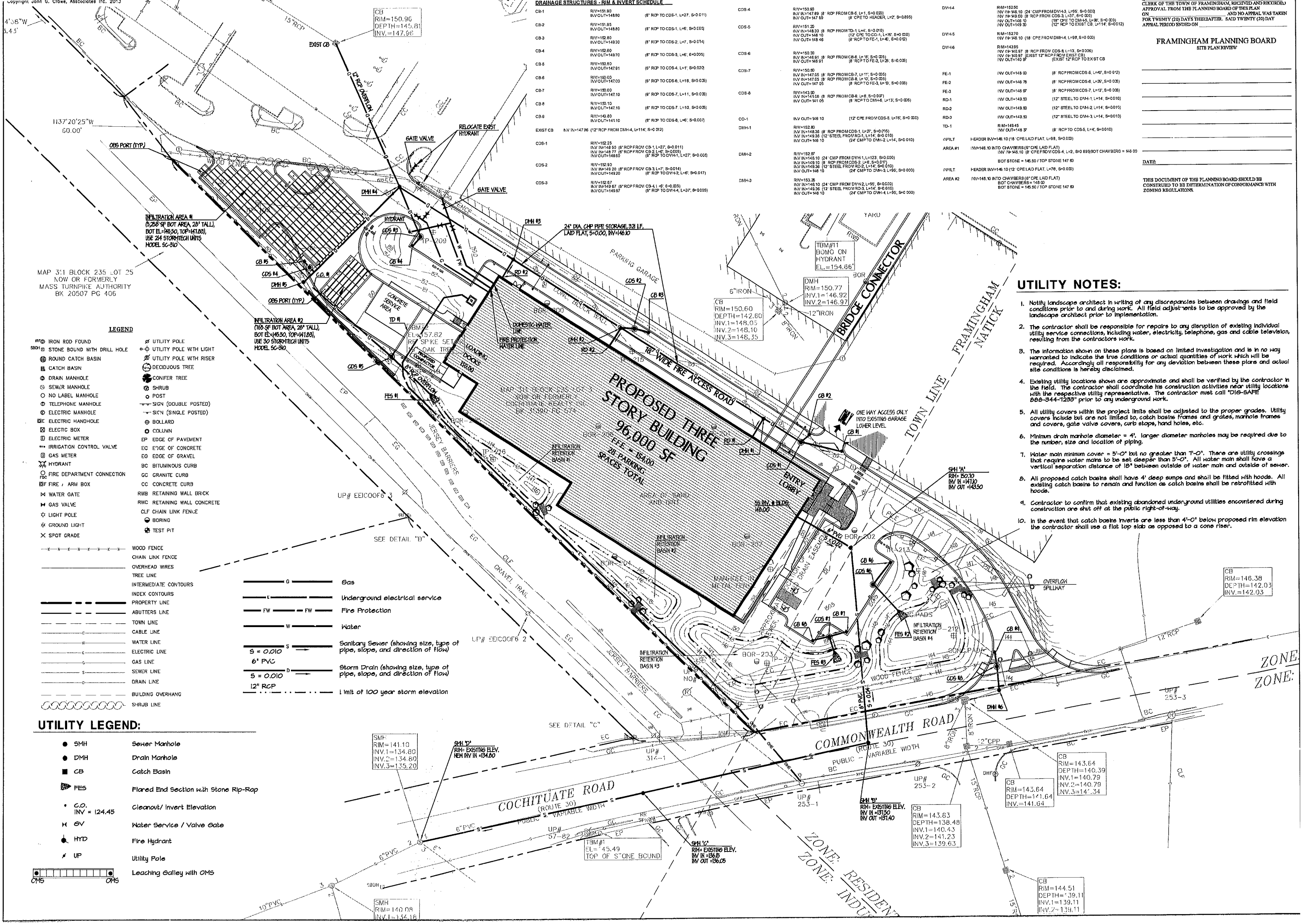

DRAINAGE STRUCTURES - RIM & INVERT SCHEDULE

CB-1	RIM=151.90 INV OUT=148.80	(6" RCP TO CDS-1, L=27', S=0.011)
CB-2	RIM=151.95 INV OUT=148.80	(8" RCP TO CDS-1, L=6', S=0.005)
CB-3	RIM=152.80 INV OUT=149.30	(8" RCP TO CDS-2, L=7', S=0.014)
CB-4	RIM=152.60 INV OUT=149.70	(8" RCP TO CDS-3, L=6', S=0.005)
CB-5	RIM=150.60 INV OUT=147.91	(6" RCP TO CDS-4, L=1', S=0.020)
CB-6	RIM=150.00 INV OUT=147.00	(6" RCP TO CDS-6, L=18, S=0.035)
CB-7	RIM=150.00 INV OUT=147.10	(6" RCP TO CDS-7, L=11, S=0.005)
CB-8	RIM=150.10 INV OUT=147.10	(8" RCP TO CDS-7, L=10, S=0.005)
CB-9	RIM=143.80 INV OUT=141.10	(8" RCP TO CDS-8, L=6', S=0.007)
EXIST CB	INV IN=147.96	(12" RCP FROM DMH-4, L=114', S=0.012)
CDS-1	RIM=152.25 INV IN=148.50 INV IN=148.77 INV OUT=148.60	(8" RCP FROM CB-1, L=27', S=0.011) (8" RCP FROM CB-2, L=6', S=0.005) (8" RCP TO DMH-1, L=27', S=0.005)
CDS-2	RIM=152.90 INV IN=149.20 INV OUT=149.20	(8" RCP FROM CB-3, L=7', S=0.014) (8" RCP TO DMH-2, L=6', S=0.017)
CDS-3	RIM=152.67 INV IN=149.67 INV OUT=149.57	(8" RCP FROM CB-4, L=6', S=0.005) (8" RCP TO DMH-4, L=37', S=0.005)
CDS-4	RIM=150.80 INV IN=147.89 INV OUT=147.69	(8" RCP FROM CB-5, L=1', S=0.020) (8" CPE TO HEADER, L=2', S=0.0895)
CDS-5	RIM=151.20 INV IN=148.33 INV OUT=148.10 INV OUT=148.46	(8" RCP FROM TD-1, L=44', S=0.010) (12" CPE TO CO-1, L=75', S=0.000) (8" RCP TO FE-1, L=40', S=0.012)
CDS-6	RIM=150.30 INV IN=146.61 INV OUT=146.61	(8" RCP FROM CB-6, L=18', S=0.035) (8" RCP TO FE-2, L=25', S=0.005)
CDS-7	RIM=150.50 INV IN=147.05 INV IN=147.05 INV OUT=147.05	(8" RCP FROM CB-7, L=11', S=0.005) (8" RCP FROM CB-8, L=10', S=0.005) (8" RCP TO FE-3, L=10', S=0.005)
CDS-8	RIM=143.90 INV IN=141.05 INV OUT=141.05	(8" RCP FROM CB-9, L=6', S=0.007) (8" RCP TO DMH-6, L=13', S=0.005)
CO-1	INV OUT=148.10	(12" CPE FROM CDS-5, L=75', S=0.000)
DMH-1	RIM=152.80 INV IN=148.36 INV IN=149.36 INV OUT=148.10	(8" RCP FROM CDS-1, L=27', S=0.015) (12" STEEL FROM RD-1, L=14', S=0.010) (24" CMP TO DMH-2, L=14', S=0.010)
DMH-2	RIM=152.87 INV IN=149.10 INV IN=149.10 INV IN=149.36 INV OUT=148.10	(24" CMP FROM DMH-1, L=123', S=0.000) (8" RCP FROM CDS-2, L=8, S=0.017) (12" STEEL FROM RD-2, L=14', S=0.010) (24" CMP TO DMH-3, L=95', S=0.000)
DMH-3	RIM=153.35 INV IN=148.10 INV IN=149.36 INV OUT=148.10	(24" CMP FROM DMH-2, L=95', S=0.000) (12" STEEL FROM RD-3, L=14', S=0.010) (24" CMP TO DMH-4, L=95', S=0.000)
DMH-4	RIM=152.50 INV IN=148.10 INV IN=149.50 INV OUT=148.10 INV OUT=149.30	(24" CMP FROM DMH-3, L=95', S=0.000) (8" RCP FROM CDS-3, L=37', S=0.005) (18" CPE TO DMH-5, L=38', S=0.000) (12" RCP TO EXIST CB, L=114', S=0.012)
DMH-5	RIM=152.70 INV IN=148.10	(18" CPE FROM DMH-4, L=98', S=0.000)
DMH-6	RIM=143.95 INV IN=140.97 INV IN=140.97 INV OUT=140.97	(8" RCP FROM CDS-6, L=13', S=0.006) (EXIST 12" RCP FROM EXIST CB) (EXIST 12" RCP TO EXIST CB
FE-1	INV OUT=148.00	(8" RCP FROM CDS-5, L=40', S=0.012)
FE-2	INV OUT=148.78	(8" RCP FROM CDS-6, L=25', S=0.005)
FE-3	INV OUT=146.97	(8" RCP FROM CDS-7, L=13', S=0.005)
RD-1	INV OUT=149.50	(12" STEEL TO DMH-1, L=14', S=0.010)
RD-2	INV OUT=149.50	(12" STEEL TO DMH-2, L=14', S=0.010)
RD-3	INV OUT=149.50	(12" STEEL TO DMH-3, L=14', S=0.010)
TD-1	RIM=149.45 INV OUT=148.37	(8" RCP TO CDS-5, L=4', S=0.010)
INFILT	HEADER INV=148.10	(18" CPE LAID FLAT, L=98', S=0.000)
AREA #1	INV=146.10 INV IN=148.10 BOT STONE = 145.50 / TOP STONE 147.83	INTO CHAMBERS (6" CPE LAID FLAT) (8" CPE FROM CDS-4, L=2, S=0.895)BOT CHAMBERS = 146.00
INFILT	HEADER INV=148.10	(12" CPE LAID FLAT, L=78, S=0.000)
AREA #2	INV=146.10 BOT CHAMBERS = 146.00 BOT STONE = 145.50 / TOP STONE 147.83	INTO CHAMBERS (6" CPE LAID FLAT)

CLERK OF THE TOWN OF FRAMINGHAM, RECEIVED AND RECORDED APPROVAL FROM THE PLANNING BOARD OF THIS PLAN
ON _____, AND NO APPEAL WAS TAKEN
FOR TWENTY (20) DAYS THEREAFTER. SAID TWENTY (20) DAY
APPEAL PERIOD ENDED ON _____

FRAMINGHAM PLANNING BOARD
SITE PLAN REVIEW

_____
_____
_____
_____
_____
_____
_____
_____

DATE: _____

THIS DOCUMENT OF THE PLANNING BOARD SHOULD BE CONSTRUED TO BE DETERMINATION OF CONFORMANCE WITH ZONING REGULATIONS.

UTILITY NOTES:

1. Notify landscape architect in writing of any discrepancies between drawings and field conditions prior to and during work. All field adjustments to be approved by the landscape architect prior to implementation.
2. The contractor shall be responsible for repairs to any disruption of existing individual utility service connections, including water, electricity, telephone, gas and cable television, resulting from the contractors work.
3. The information shown on these plans is based on limited investigation and is in no way warranted to indicate the true conditions or actual quantities of work which will be required. Accordingly all responsibility for any deviation between these plans and actual site conditions is hereby disclaimed.
4. Existing utility locations shown are approximate and shall be verified by the contractor in the field. The contractor shall coordinate his construction activities near utility locations with the respective utility representative. The contractor must call "DIG-SAFE 888-344-7233" prior to any underground work.
5. All utility covers within the project limits shall be adjusted to the proper grades. Utility covers include but are not limited to, catch basins frames and grates, manhole frames and covers, gate valve covers, curb stops, hand holes, etc.
6. Minimum drain manhole diameter = 4'. larger diameter manholes may be required due to the number, size and location of piping.
7. Water main minimum cover = 5'-0" but no greater than 7'-0". There are utility crossings that require water mains to be set deeper than 5'-0". All water main shall have a vertical separation distance of 18" between outside of water main and outside of sewer.
8. All proposed catch basins shall have 4' deep sumps and shall be fitted with hoods. All existing catch basins to remain and function as catch basins shall be retrofitted with hoods.
9. Contractor to confirm that existing abandoned underground utilities encountered during construction are shut off at the public right-of-way.
10. In the event that catch basins inverts are less than 4'-0" below proposed rim elevation the contractor shall use a flat top slab as opposed to a cone riser.

LEGEND

- IRF IRON ROD FOUND
- SBDH STONE BOUND WITH DRILL HOLE
- ROUND CATCH BASIN
- CATCH BASIN
- DRAIN MANHOLE
- SEWER MANHOLE
- NO LABEL MANHOLE
- TELEPHONE MANHOLE
- ELECTRIC MANHOLE
- E ELECTRIC HANDHOLE
- ELECTRIC BOX
- E ELECTRIC METER
- IRRIGATION CONTROL VALVE
- G GAS METER
- HYDRANT
- FDC FIRE DEPARTMENT CONNECTION
- F FIRE / ARM BOX
- WATER GATE
- GAS VALVE
- LIGHT POLE
- GROUND LIGHT
- SPOT GRADE
- UTILITY POLE
- UTILITY POLE WITH LIGHT
- UTILITY POLE WITH RISER
- DECIDUOUS TREE
- CONIFER TREE
- SHRUB
- POST
- SIGN (DOUBLE POSTED)
- SIGN (SINGLE POSTED)
- BOLLARD
- COLUMN
- EP EDGE OF PAVEMENT
- EC EDGE OF CONCRETE
- EG EDGE OF GRAVEL
- BC BITUMINOUS CURB
- GC GRANITE CURB
- CC CONCRETE CURB
- RWB RETAINING WALL BRICK
- RWC RETAINING WALL CONCRETE
- CLF CHAIN LINK FENCE
- BORING
- TEST PIT
- WOOD FENCE
- CHAIN LINK FENCE
- OVERHEAD WIRES
- TREE LINE
- INTERMEDIATE CONTOURS
- INDEX CONTOURS
- PROPERTY LINE
- ABUTTERS LINE
- TOWN LINE
- CABLE LINE
- WATER LINE
- ELECTRIC LINE
- GAS LINE
- SEWER LINE
- DRAIN LINE
- BUILDING OVERHANG
- SHRUB LINE
- G — Gas
- E — Underground electrical service
- FW — Fire Protection
- W — Water
- S — Sanitary Sewer (showing size, type of pipe, slope, and direction of flow) S = 0.010, 6" PVC
- D — Storm Drain (showing size, type of pipe, slope, and direction of flow) S = 0.010, 12" RCP
- Limit of 100 year storm elevation

UTILITY LEGEND:

- SMH — Sewer Manhole
- DMH — Drain Manhole
- CB — Catch Basin
- FES — Flared End Section with Stone Rip-Rap
- C.O. INV = 124.45 — Cleanout/ Invert Elevation
- GV — Water Service / Valve Gate
- HYD — Fire Hydrant
- UP — Utility Pole
- OMS — Leaching Galley with OMS

Copyright John G. Crowe, Associates Inc. 2013

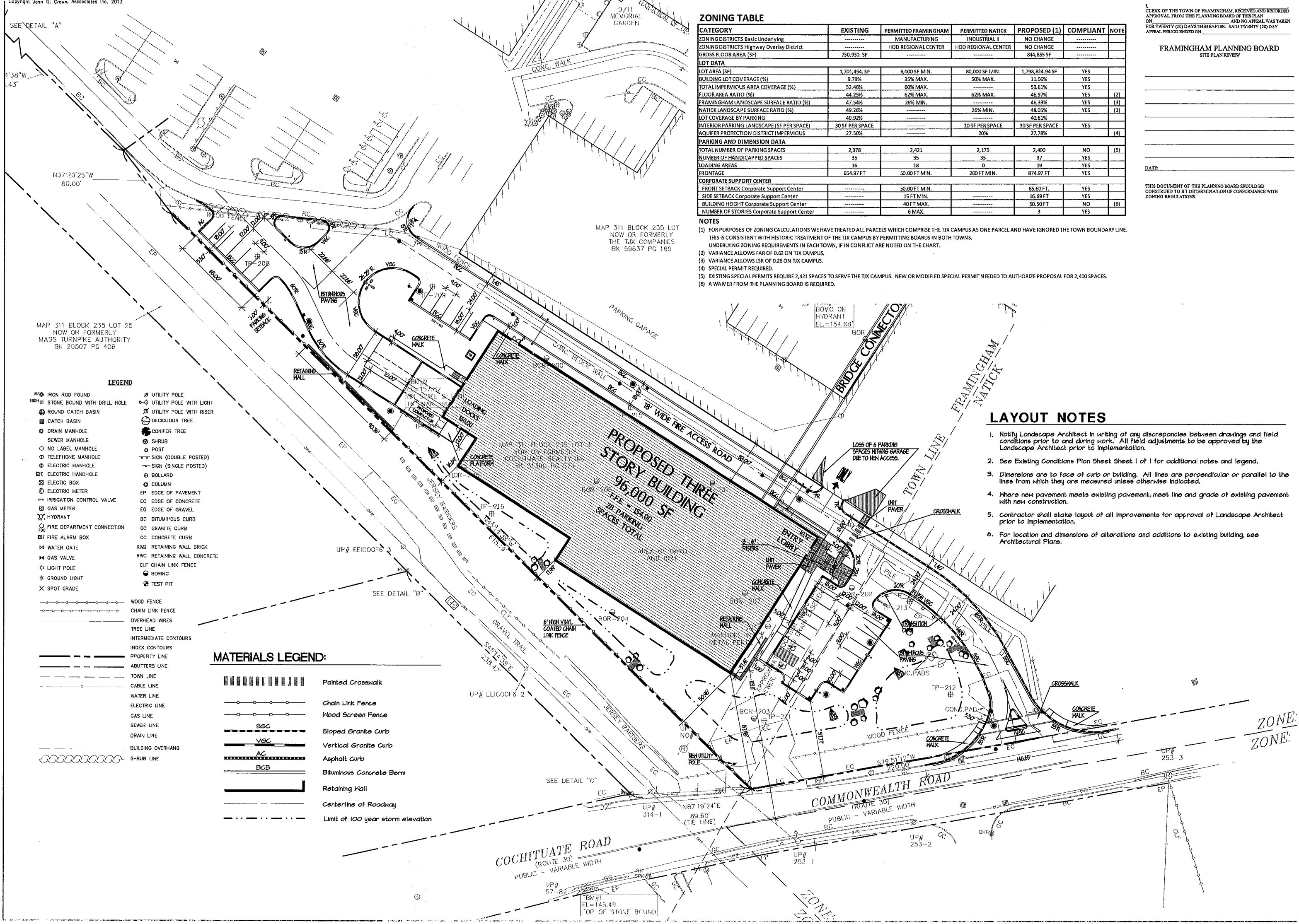

ZONING TABLE

CATEGORY	EXISTING	PERMITTED FRAMINGHAM	PERMITTED NATICK	PROPOSED (1)	COMPLIANT	NOTE
ZONING DISTRICTS Basic Underlying	----------	MANUFACTURING	INDUSTRIAL II	NO CHANGE	----------	
ZONING DISTRICTS Highway Overlay District	----------	HOD REGIONAL CENTER	HOD REGIONAL CENTER	NO CHANGE	----------	
GROSS FLOOR AREA (SF)	750,930. SF	----------	----------	844,855 SF	----------	
LOT DATA						
LOT AREA (SF)	1,701,454. SF	6,000 SF MIN.	80,000 SF MIN.	1,798,824.94 SF	YES	
BUILDING LOT COVERAGE (%)	9.79%	35% MAX.	50% MAX.	11.06%	YES	
TOTAL IMPERVIOUS AREA COVERAGE (%)	52.46%	60% MAX.	----------	53.61%	YES	
FLOOR AREA RATIO (%)	44.25%	62% MAX.	62% MAX.	46.97%	YES	(2)
FRAMINGHAM LANDSCAPE SURFACE RATIO (%)	47.54%	26% MIN.	----------	46.39%	YES	(3)
NATICK LANDSCAPE SURFACE RATIO (%)	49.26%	----------	26% MIN.	48.05%	YES	(3)
LOT COVERAGE BY PARKING	40.92%	----------	----------	40.61%		
INTERIOR PARKING LANDSCAPE (SF PER SPACE)	30 SF PER SPACE	----------	10 SF PER SPACE	30 SF PER SPACE	YES	
AQUIFER PROTECTION DISTRICT IMPERVIOUS	27.50%	----------	20%	27.78%		(4)
PARKING AND DIMENSION DATA						
TOTAL NUMBER OF PARKING SPACES	2,378	2,421	2,175	2,400	NO	(5)
NUMBER OF HANDICAPPED SPACES	35	35	35	37	YES	
LOADING AREAS	16	18	0	19	YES	
FRONTAGE	654.97 FT	50.00 FT MIN.	200 FT MIN.	874.97 FT	YES	
CORPORATE SUPPORT CENTER						
FRONT SETBACK Corporate Support Center	----------	50.00 FT MIN.		85.60 FT.	YES	
SIDE SETBACK Corporate Support Center	----------	15 FT MIN.	----------	16.69 FT	YES	
BUILDING HEIGHT Corporate Support Center	----------	40 FT MAX.	----------	50.50 FT	NO	(6)
NUMBER OF STORIES Corporate Support Center	----------	6 MAX.	----------	3	YES	

NOTES

(1) FOR PURPOSES OF ZONING CALCULATIONS WE HAVE TREATED ALL PARCELS WHICH COMPRISE THE TJX CAMPUS AS ONE PARCEL AND HAVE IGNORED THE TOWN BOUNDARY LINE. THIS IS CONSISTENT WITH HISTORIC TREATMENT OF THE TJX CAMPUS BY PERMITTING BOARDS IN BOTH TOWNS. UNDERLYING ZONING REQUIREMENTS IN EACH TOWN, IF IN CONFLICT ARE NOTED ON THE CHART.
(2) VARIANCE ALLOWS FAR OF 0.62 ON TJX CAMPUS.
(3) VARIANCE ALLOWS LSR OF 0.26 ON TJX CAMPUS.
(4) SPECIAL PERMIT REQUIRED.
(5) EXISTING SPECIAL PERMITS REQUIRE 2,421 SPACES TO SERVE THE TJX CAMPUS. NEW OR MODIFIED SPECIAL PERMIT NEEDED TO AUTHORIZE PROPOSAL FOR 2,400 SPACES.
(6) A WAIVER FROM THE PLANNING BOARD IS REQUIRED.

I,
CLERK OF THE TOWN OF FRAMINGHAM, RECEIVED AND RECORDED APPROVAL FROM THE PLANNING BOARD OF THIS PLAN
ON _____ AND NO APPEAL WAS TAKEN
FOR TWENTY (20) DAYS THEREAFTER. SAID TWENTY (20) DAY APPEAL PERIOD ENDED ON _____

FRAMINGHAM PLANNING BOARD
SITE PLAN REVIEW

_____
_____
_____
_____
_____
_____
_____
_____

DATE: _____

THIS DOCUMENT OF THE PLANNING BOARD SHOULD BE CONSTRUED TO BE DETERMINATION OF CONFORMANCE WITH ZONING REGULATIONS.

LAYOUT NOTES

1. Notify Landscape Architect in writing of any discrepancies between drawings and field conditions prior to and during work. All field adjustments to be approved by the Landscape Architect prior to implementation.
2. See Existing Conditions Plan Sheet Sheet 1 of 1 for additional notes and legend.
3. Dimensions are to face of curb or building. All lines are perpendicular or parallel to the lines from which they are measured unless otherwise indicated.
4. Where new pavement meets existing pavement, meet line and grade of existing pavement with new construction.
5. Contractor shall stake layout of all improvements for approval of Landscape Architect prior to implementation.
6. For location and dimensions of alterations and additions to existing building, see Architectural Plans.

LEGEND

- IRF IRON ROD FOUND
- SBDH STONE BOUND WITH DRILL HOLE
- ROUND CATCH BASIN
- CATCH BASIN
- DRAIN MANHOLE
- SEWER MANHOLE
- NO LABEL MANHOLE
- TELEPHONE MANHOLE
- ELECTRIC MANHOLE
- ELECTRIC HANDHOLE
- ELECTIC BOX
- ELECTRIC METER
- IRRIGATION CONTROL VALVE
- GAS METER
- HYDRANT
- FDC FIRE DEPARTMENT CONNECTION
- FIRE ALARM BOX
- WATER GATE
- GAS VALVE
- LIGHT POLE
- GROUND LIGHT
- SPOT GRADE
- UTILITY POLE
- UTILITY POLE WITH LIGHT
- UTILITY POLE WITH RISER
- DECIDUOUS TREE
- CONIFER TREE
- SHRUB
- POST
- SIGN (DOUBLE POSTED)
- SIGN (SINGLE POSTED)
- BOLLARD
- COLUMN
- EP EDGE OF PAVEMENT
- EC EDGE OF CONCRETE
- EG EDGE OF GRAVEL
- BC BITUMINOUS CURB
- GC GRANITE CURB
- CC CONCRETE CURB
- RWB RETAINING WALL BRICK
- RWC RETAINING WALL CONCRETE
- CLF CHAIN LINK FENCE
- BORING
- TEST PIT
- WOOD FENCE
- CHAIN LINK FENCE
- OVERHEAD WIRES
- TREE LINE
- INTERMEDIATE CONTOURS
- INDEX CONTOURS
- PROPERTY LINE
- ABUTTERS LINE
- TOWN LINE
- CABLE LINE
- WATER LINE
- ELECTRIC LINE
- GAS LINE
- SEWER LINE
- DRAIN LINE
- BUILDING OVERHANG
- SHRUB LINE

MATERIALS LEGEND:

- Painted Crosswalk
- Chain Link Fence
- Wood Screen Fence
- SGC Sloped Granite Curb
- VGC Vertical Granite Curb
- AC Asphalt Curb
- BCB Bituminous Concrete Berm
- Retaining Wall
- Centerline of Roadway
- Limit of 100 year storm elevation

Copyright John G. Crowe, Associates Inc. 2013

PLANTING LEGEND:

- Deciduous Tree
- Evergreen Tree
- Flowering Tree
- Shrub Mass
- Ground Cover
- Existing Tree to Remain
- Landscape Boulder
- Limit of Plant bed

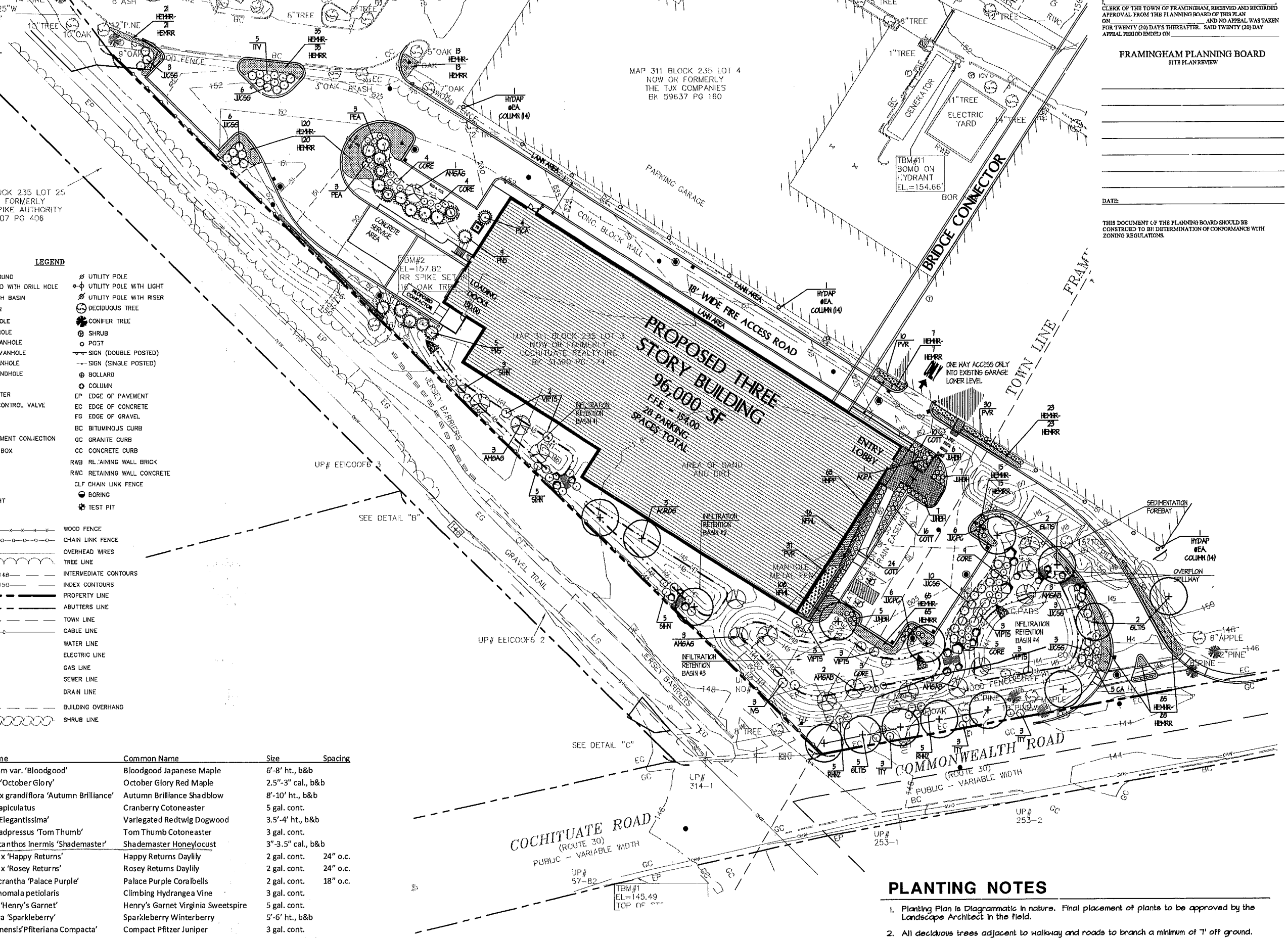

LEGEND

- IRON ROD FOUND
- STONE BOUND WITH DRILL HOLE
- ROUND CATCH BASIN
- CATCH BASIN
- DRAIN MANHOLE
- SEWER MANHOLE
- NO LABEL MANHOLE
- TELEPHONE MANHOLE
- ELECTRIC MANHOLE
- ELECTRIC HANDHOLE
- ELECTIC BOX
- ELECTRIC METER
- IRRIGATION CONTROL VALVE
- GAS METER
- HYDRANT
- FIRE DEPARTMENT CONNECTION
- FIRE ALARM BOX
- WATER GATE
- GAS VALVE
- LIGHT POLE
- GROUND LIGHT
- SPOT GRADE
- UTILITY POLE
- UTILITY POLE WITH LIGHT
- UTILITY POLE WITH RISER
- DECIDUOUS TREE
- CONIFER TREE
- SHRUB
- POST
- SIGN (DOUBLE POSTED)
- SIGN (SINGLE POSTED)
- BOLLARD
- COLUMN
- EP EDGE OF PAVEMENT
- EC EDGE OF CONCRETE
- EG EDGE OF GRAVEL
- BC BITUMINOUS CURB
- GC GRANITE CURB
- CC CONCRETE CURB
- RWB RETAINING WALL BRICK
- RWC RETAINING WALL CONCRETE
- CLF CHAIN LINK FENCE
- BORING
- TEST PIT
- WOOD FENCE
- CHAIN LINK FENCE
- OVERHEAD WIRES
- TREE LINE
- INTERMEDIATE CONTOURS
- INDEX CONTOURS
- PROPERTY LINE
- ABUTTERS LINE
- TOWN LINE
- CABLE LINE
- WATER LINE
- ELECTRIC LINE
- GAS LINE
- SEWER LINE
- DRAIN LINE
- BUILDING OVERHANG
- SHRUB LINE

Symbol	Quantity	Scientific Name	Common Name	Size	Spacing
ACPA	1	Acer palmatum var. 'Bloodgood'	Bloodgood Japanese Maple	6'-8' ht., b&b	
ACROG		Acer rubrum 'October Glory'	October Glory Red Maple	2.5"-3" cal., b&b	
AMGAB		Amelanchier x grandiflora 'Autumn Brilliance'	Autumn Brilliance Shadblow	8'-10' ht., b&b	
CA		Cotoneaster apiculatus	Cranberry Cotoneaster	5 gal. cont.	
CORE		Cornus alba 'Elegantissima'	Variegated Redtwig Dogwood	3.5'-4' ht., b&b	
COTT		Cotoneaster adpressus 'Tom Thumb'	Tom Thumb Cotoneaster	3 gal. cont.	
GLTIS		Gleditsia triacanthos inermis 'Shademaster'	Shademaster Honeylocust	3"-3.5" cal., b&b	
HEMHR		Hemerocallis x 'Happy Returns'	Happy Returns Daylily	2 gal. cont.	24" o.c.
HEMRR		Hemerocallis x 'Rosey Returns'	Rosey Returns Daylily	2 gal. cont.	24" o.c.
HMPP		Heuchera micrantha 'Palace Purple'	Palace Purple Coralbells	2 gal. cont.	18" o.c.
HYDAP		Hydrangea anomala petiolaris	Climbing Hydrangea Vine	3 gal. cont.	
ITV		Itea virginica 'Henry's Garnet'	Henry's Garnet Virginia Sweetspire	5 gal. cont.	
IVS		Ilex verticillata 'Sparkleberry'	Sparkleberry Winterberry	5'-6' ht., b&b	
JUCPC		Juniperus chinensis 'Pfiteriana Compacta'	Compact Pfitzer Juniper	3 gal. cont.	
JUCSG		Juniperus chinensis 'Sea Green'	Sea Green Juniper	3.5'-4' ht., b&b	
JUHBH		Juniperus horizontalis 'Bar Harbor'	Bar Harbor Harbor Creeping Juniper	3 gal. cont.	
NFWL		Nepeta faassenii 'Walker's Low'	Walker's Low Catmint	1 gal. cont.	15" o.c.
PEA		Perovskia atriplicifolia	Russian Sage	5 gal. cont.	
PICA		Picea abies	Norway Spruce	8'-10' ht., b&b	
PNS		Pinus strobus	Eastern White Pine	8'-10' ht., b&b	
PVR		Panicum virgatum 'Ruby Ribbons'	Ruby Ribbons Switch Grass	3 gal. cont.	
RHNZ		Rhododendron 'Nova Zembla'	Nova Zembla Rhododendron	3.5'-4' ht., b&b	
SIHN		Salix integra 'Hakuro Nishiki'	Dappled Willow	3'-3.5' ht., b&b	
VIPTS		Viburnum plicatum tomentosum 'Shasta'	Shasta Doublefile Viburnum	5'-6' ht., b&b	

Planting Notes:

1. All of the above-listed plant materials are of minimum Plant Hardiness Zone 5, as defined by the American Standards for Nursery Stock.
2. All trees shall be set back from face of curb a minimum of 5'.

CLERK OF THE TOWN OF FRAMINGHAM, RECEIVED AND RECORDED APPROVAL FROM THE PLANNING BOARD OF THIS PLAN ON _____ AND NO APPEAL WAS TAKEN FOR TWENTY (20) DAYS THEREAFTER. SAID TWENTY (20) DAY APPEAL PERIOD ENDED ON _____

FRAMINGHAM PLANNING BOARD
SITE PLAN REVIEW

DATE: _____

THIS DOCUMENT OF THE PLANNING BOARD SHOULD BE CONSTRUED TO BE DETERMINATION OF CONFORMANCE WITH ZONING REGULATIONS.

PLANTING NOTES

1. Planting Plan is Diagrammatic in nature. Final placement of plants to be approved by the Landscape Architect in the field.
2. All deciduous trees adjacent to walkway and roads to branch a minimum of 7' off ground.
3. No plant substitution will be permitted unless authorized by the landscape architect in writing.
4. Contractor shall verify quantities shown on plant list. Quantities shown on plans shall govern.
5. Loam and seed all disturbed areas not noted to receive other treatment. See Grading Plans for complete limit of work.
6. All plant material shall conform to the guidelines established by the American Standard Nursery Stock published by the American Association of Nurserymen.
7. Stain all tree stakes dark brown per specifications.
8. All trees (evergreen and deciduous) to be setback a minimum of 5' off the curb.
9. All shrub and perennial planting beds shall receive 2'-0" of loam/planting mixture (see spec).

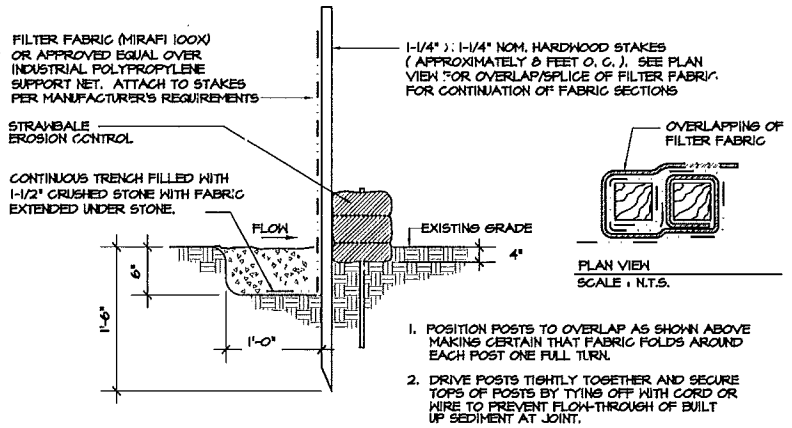

1. POSITION POSTS TO OVERLAP AS SHOWN ABOVE MAKING CERTAIN THAT FABRIC FOLDS AROUND EACH POST ONE FULL TURN.
2. DRIVE POSTS TIGHTLY TOGETHER AND SECURE TOPS OF POSTS BY TYING OFF WITH CORD OR WIRE TO PREVENT FLOW-THROUGH OF BUILT UP SEDIMENT AT JOINT.

1 SILT FENCE AND STRAW BALE BARRIER

SCALE : 1" = 1'-0"

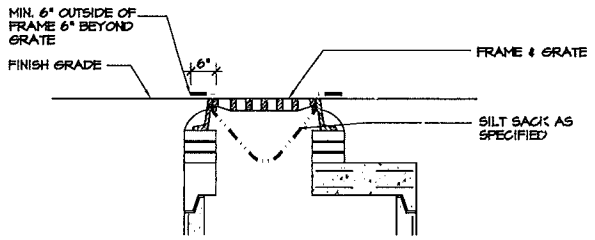

2 SILT SACK PROTECTION FOR CATCH BASIN

SCALE: 1/2" = 1'-0"

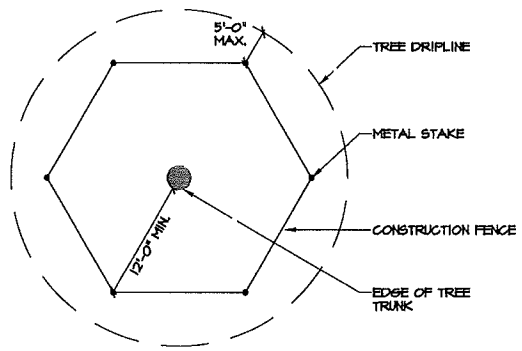

NOTE:

1. CONSTRUCTION FENCE TO BE "VISUAL BARRIER FENCE" AS MANUFACTURED BY EXXON CHEMICAL COMPANY ATLANTA, GA; "KONTROL SAFETY FENCE" AS MANUFACTURED BY MIRAFI, CHARLOTTE, N.C. OR APPROVED EQUAL.
2. IF GROUPS OF TREES ARE TO BE PROTECTED, EXTEND FENCE AROUND PERIMETER TO CONFORM TO MINIMUM DIMENSIONS FOR TREE TRUNKS AND DRIPLINE.

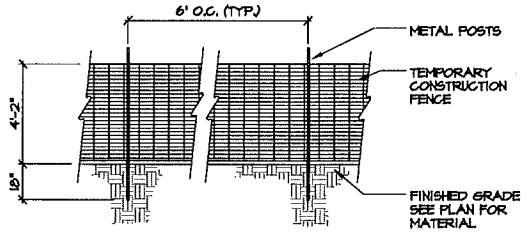

3 TEMP. CONSTRUCTION FENCE/TREE PROTECTION

SCALE: 1/4" = 1'- 0"

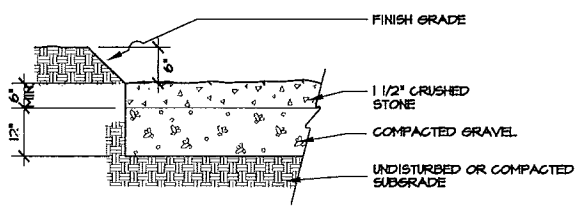

4 TIRE CLEANING SURFACE

SCALE: N.T.S.

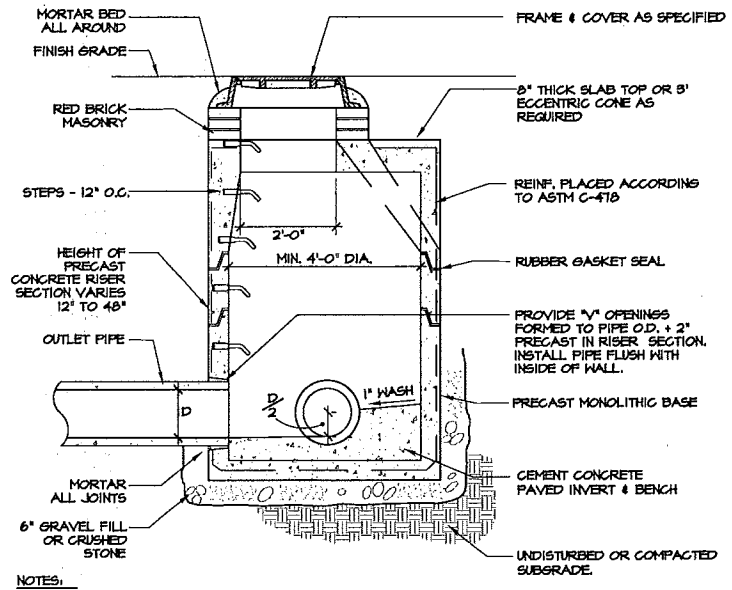

NOTES:

1. MANHOLE TO BE CONSTRUCTED FOR AASHTO HS-20-44 LOADING
2. SEE UTILITY PLAN FOR PIPE INVERT ELEVATIONS.
3. WHEN USING BRICK TO ADJUST FRAME AND COVER TO GRADE, USE TWO BRICK COURSES MINIMUM AND FOUR COURSES MAXIMUM.

5 DRAIN MANHOLE

SCALE: 1/2" = 1'-0"

NOTES:

1. CATCH BASIN TO BE CONSTRUCTED FOR AASHTO HS-20-44 LOADING.
2. TWO WEEP HOLE OPENINGS TO BE PRECAST INTO RISER SECTION (SEE SPECS.).
3. FRAME AND GRATE MODEL NUMBERS MAY VARY BETWEEN PAVED AND NON-PAVED AREAS - SEE SPEC
4. INSTALL CATCH BASIN SO THAT HOOD IS NOT LOCATED DIRECTLY BELOW INLET OPENING.
5. WHEN USING BRICK TO ADJUST FRAME AND COVER TO GRADE, USE TWO BRICK COURSES MINIMUM AND FOUR COURSES MAXIMUM.

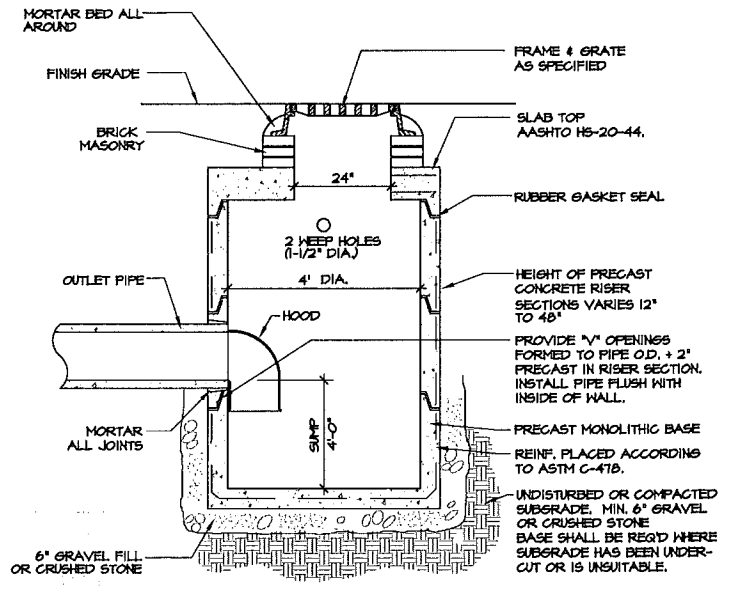

6 CATCH BASIN WITH HOOD

SCALE: N.T.S.

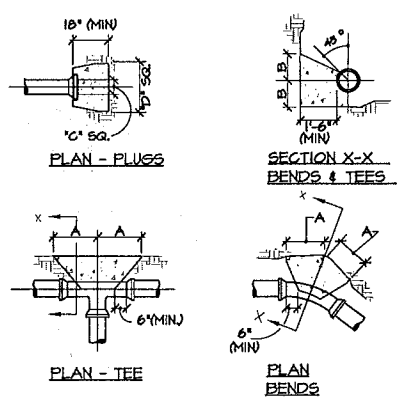

PIPE SIZE (INCHES)	1/4 BENDS		1/8 BENDS		TEES		PLUGS	
	"A"	"B"	"A"	"B"	"A"	"B"	"C"	"D"
4"	16"	10"	9"	10"	10"	12"	10"	21"
6"	22"	10"	9"	10"	10"	12"	10"	21"
8"	26"	13"	12"	13"	13"	16"	12"	24"
10"	26"	17"	14"	17"	16"	20"	14"	36"
12"	28"	19"	16"	19"	18"	24"	16"	42"

NOTES:

1. ALL CONCRETE SHALL HAVE A MINIMUM COMPRESSION STRENGTH OF 3,000 psi AT THE END OF 28 DAYS.
2. NO JOINTS SHALL BE COVERED WITH CONCRETE.
3. PAINT ALL EXPOSED STEEL WITH TWO COATS OF BITUMASTIC PAINT.

7 WATER MAIN THRUST BLOCK DETAILS

SCALE: 1/4" = 1'-0"

NOTES:

1. SEWER MANHOLE TO BE CONSTRUCTED FOR AASHTO HS-20-44 LOADING.
2. TOP OF BRICK SHELF SHALL BE ONE (1) INCH ABOVE CROWN OF HIGHEST PIPE.
3. CARE SHALL BE TAKEN TO INSURE THAT THE BRICK INVERT IS A SMOOTH CONTINUATION OF THE SEWER INVERT.
4. INVERT TO BE INVERTED ARCH WITH BRICKS LAID AS STRETCHERS AND ON EDGE.
5. WHEN USING BRICK TO ADJUST FRAME AND COVER TO GRADE, USE TWO BRICK COURSES MINIMUM AND FOUR COURSES MAXIMUM.
6. PROVIDE NEW 18" PVC PIPE ON EITHER SIDE OF THE PROPOSED SEWER MANHOLE TO THE CLOSEST EXISTING PIPE JOINT SUITABLE FOR CONSTRUCTION OF A WATER TIGHT JOINT.

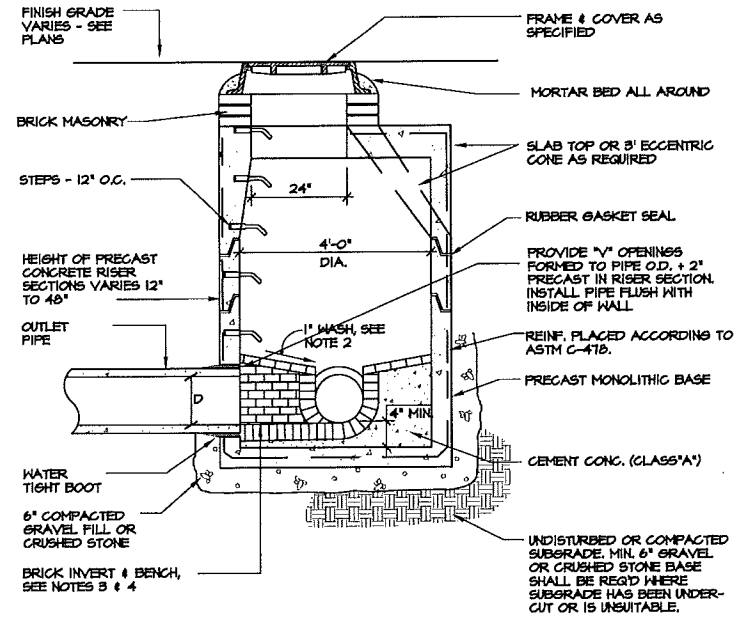

8 SANITARY SEWER MANHOLE

SCALE: 1/2" = 1'-0"

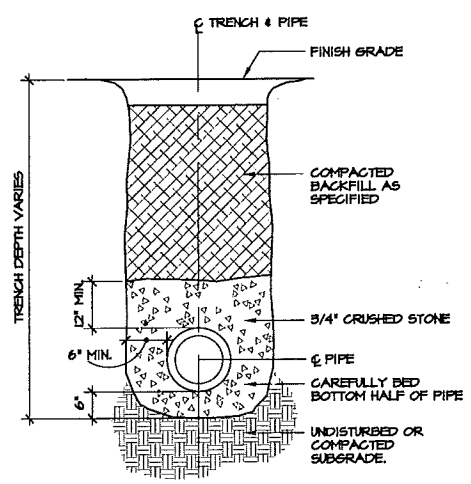

NOTE:

PROVIDE PROTECTION IN TRENCH PER OSHA REQUIREMENTS.

9 TYP. PIPE TRENCH-SEWER

SCALE: 1/2" = 1'-0"

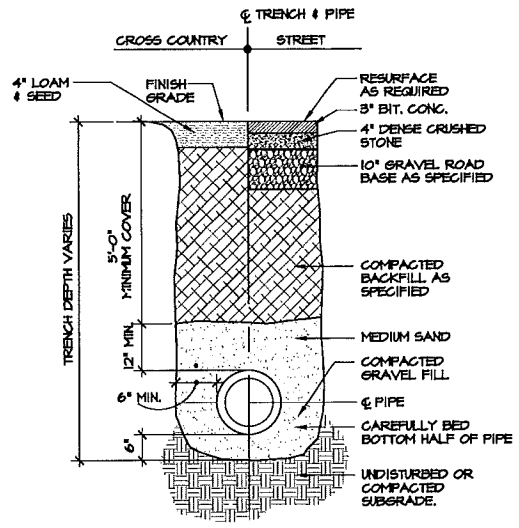

NOTE:

PROVIDE PROTECTION IN TRENCH PER OSHA REQUIREMENTS.

10 TYPICAL PIPE TRENCH - WATER

SCALE: 1/2" = 1'-0"

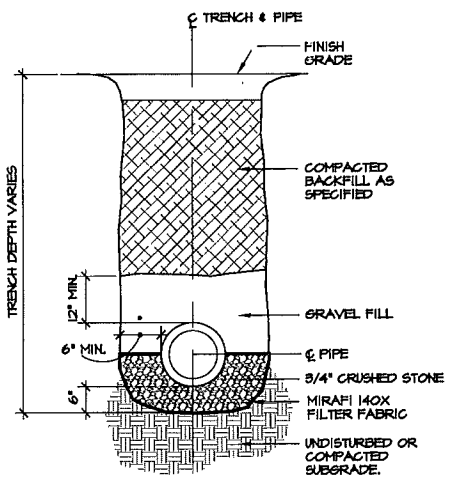

NOTE:

PROVIDE PROTECTION IN TRENCH PER OSHA REQUIREMENTS.

11 TYP. PIPE TRENCH - DRAINAGE

SCALE: 1/2" = 1'-0"

CLERK OF THE TOWN OF FRAMINGHAM, RECEIVED AND RECORDED APPROVAL FROM THE PLANNING BOARD OF THIS PLAN ON _____ AND NO APPEAL WAS TAKEN FOR TWENTY (20) DAYS THEREAFTER. SAID TWENTY (20) DAY APPEAL PERIOD ENDED ON _____

FRAMINGHAM PLANNING BOARD
SITE PLAN REVIEW

_____
_____
_____
_____
_____
_____
_____

DATE: _____

THIS DOCUMENT OF THE PLANNING BOARD SHOULD BE CONSTRUED TO BE DETERMINATION OF CONFORMANCE WITH ZONING REGULATIONS.

Copyright John G. Crowe, Associates Inc. 2013

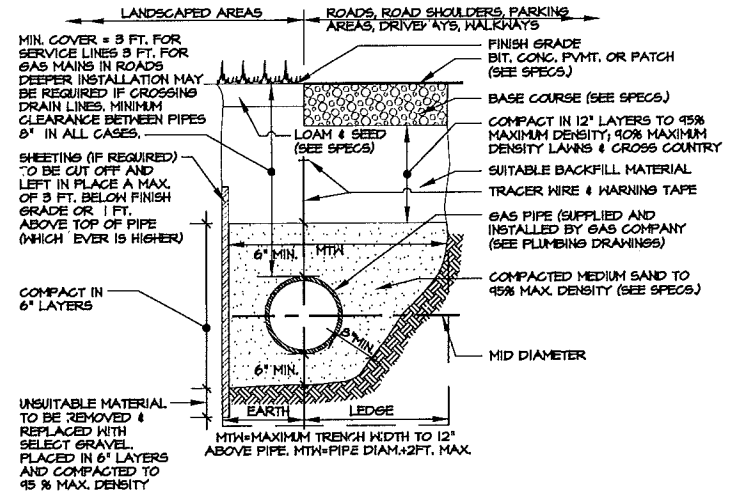

1 TRENCH FOR GAS SERVICE PIPE

SCALE: NOT TO SCALE

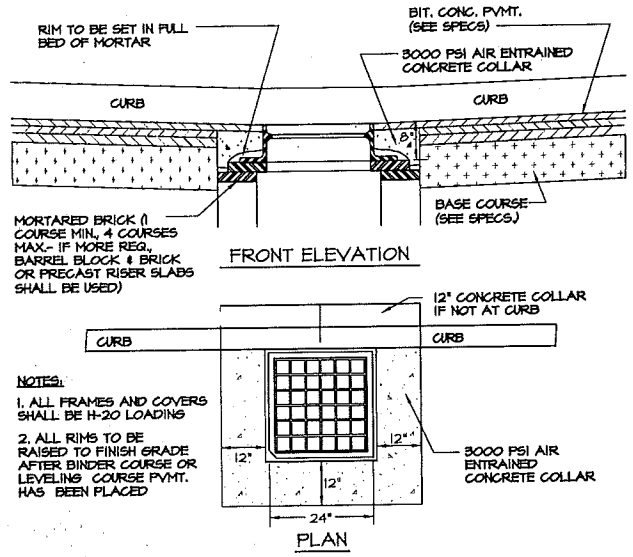

4 CATCH BASIN RIM SETTING DETAIL

SCALE: NTS

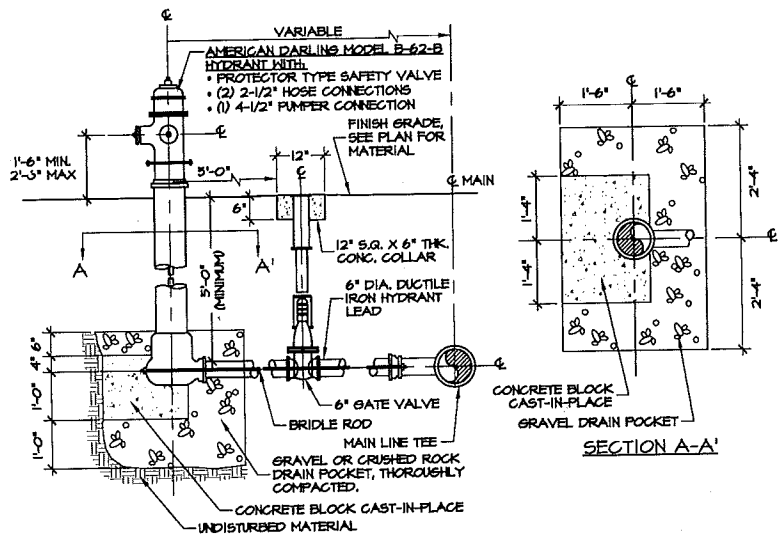

8 FIRE HYDRANT

SCALE: 1/2" = 1'-0"

I, _____, CLERK OF THE TOWN OF FRAMINGHAM, RECEIVED AND RECORDED APPROVAL FROM THE PLANNING BOARD OF THIS PLAN ON _____ AND NO APPEAL WAS TAKEN FOR TWENTY (20) DAYS THEREAFTER. SAID TWENTY (20) DAY APPEAL PERIOD ENDED ON _____

FRAMINGHAM PLANNING BOARD
SITE PLAN REVIEW

_____
_____
_____
_____
_____
_____
_____

DATE: _____

THIS DOCUMENT OF THE PLANNING BOARD SHOULD BE CONSTRUED TO BE DETERMINATION OF CONFORMANCE WITH ZONING REGULATIONS.

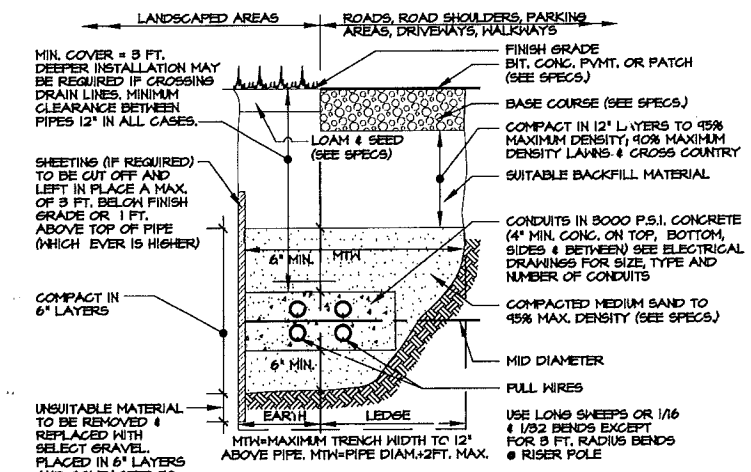

2 TRENCH FOR COMMUNICATIONS/TELEPHONE DUCT BANK

SCALE: NOT TO SCALE

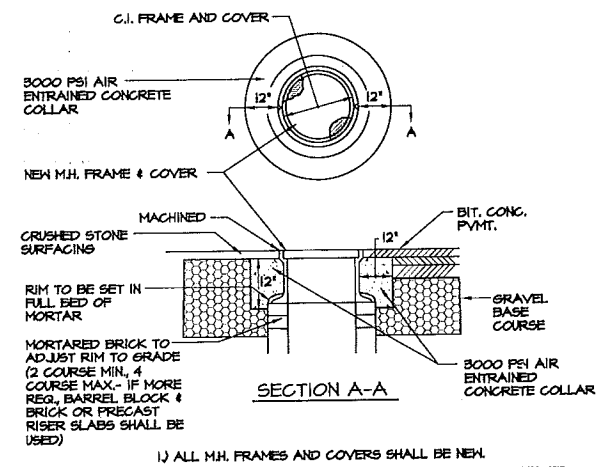

1.) ALL M.H. FRAMES AND COVERS SHALL BE NEW.
2.) ALL RIMS TO BE RAISED TO FINISH GRADE AFTER BINDER COURSE OR LEVELING COURSE PVMT. HAS BEEN PLACED
3.) ALL RIMS IN NON PAVED AREAS SHALL HAVE CONCRETE COLLARS.

5 MANHOLE FRAME, COVER & SETTING DETAIL

SCALE: NTS

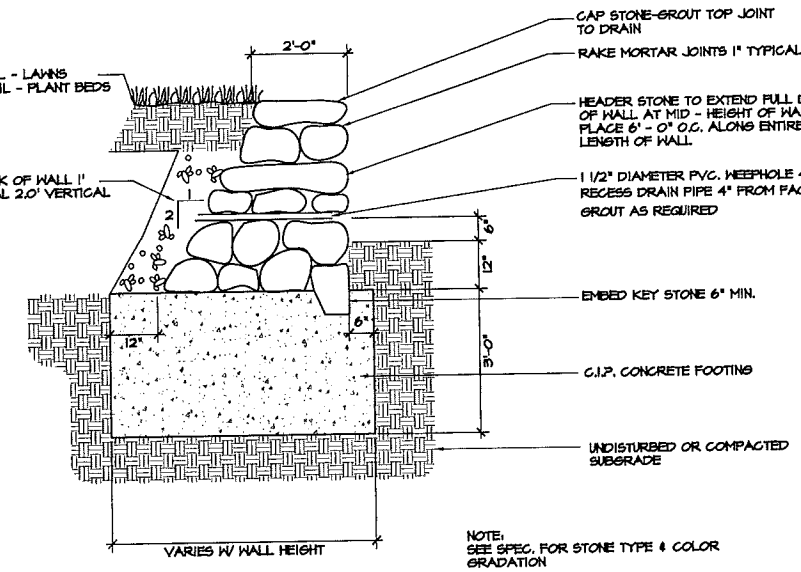

9 MORTARED STONE RETAINING WALL

SCALE: 1/2" = 1'-0"

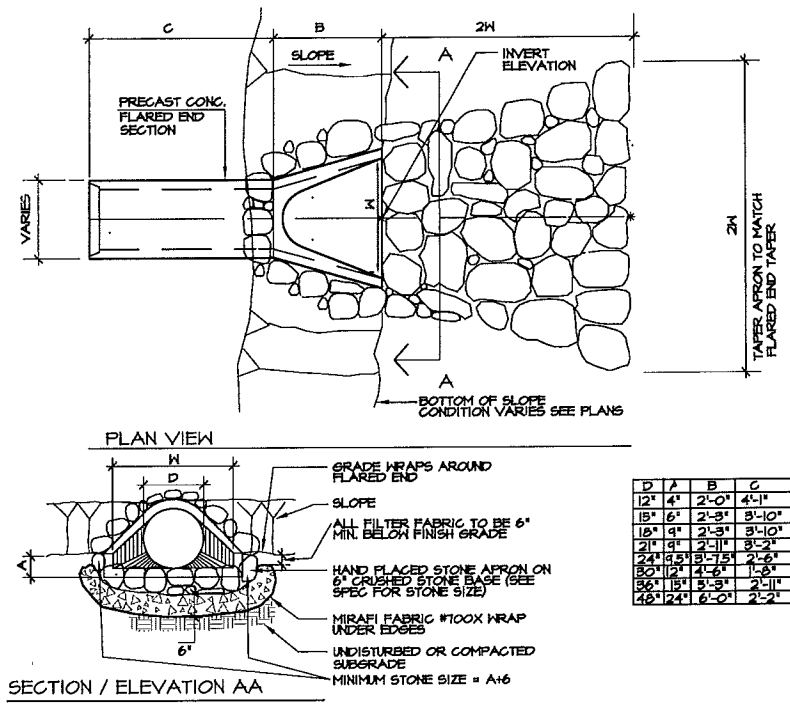

D	A	B	C	W
12"	4"	2'-0"	4'-1"	2'-0"
15"	6"	2'-3"	3'-10"	2'-6"
18"	9"	2'-9"	3'-10"	3'-0"
21"	9"	2'-11"	3'-2"	3'-6"
24"	9"	3'-7.5"	2'-6"	4'-0"
30"	12"	4'-6"	1'-6"	5'-0"
36"	15"	5'-3"	2'-11"	6'-0"
48"	24"	6'-0"	2'-2"	7'-0"

3 FLARED END SECTION WITH STONE APRON

SCALE: 1/2" = 1'-0"

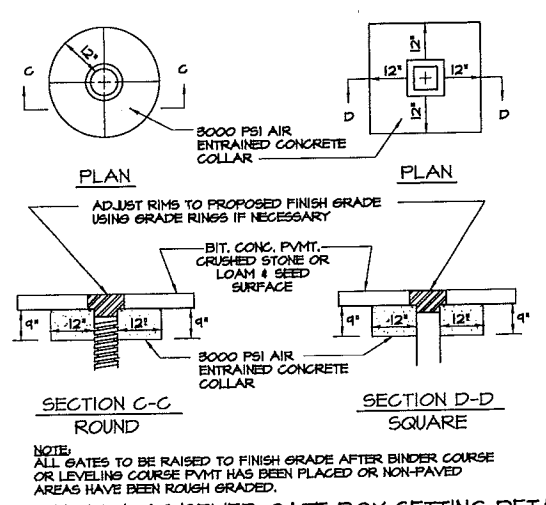

NOTE:
ALL GATES TO BE RAISED TO FINISH GRADE AFTER BINDER COURSE OR LEVELING COURSE PVMT HAS BEEN PLACED OR NON-PAVED AREAS HAVE BEEN ROUGH GRADED.

7 WATER/GAS/SEWER GATE BOX SETTING DETAIL

SCALE: NTS

NOTES:

1. REFER TO SPECIFICATIONS FOR ADDITIONAL INFORMATION.
2. INSTALL GATES AS SHOWN ON PLANS AND AS SPECIFIED.
3. INSTALL CONCRETE FOOTING 2-1/2" BELOW FINISHED GRADE.
4. REFER TO SPECIFICATIONS FOR SIZE OF CORNER, END, TERMINAL AND GATE POSTS.
5. INSTALL MID-RAIL IN LAST PANEL BEFORE/AFTER TERMINAL, CORNER OR GATE POSTS. IF FENCE IS 8' OR HIGHER, INSTALL MID-RAIL CONTINUOUSLY.
6. TOP KNUCKLED SELVAGE AND BOTTOM TWIST SELVAGE.
7. ALL POSTS, RAILS AND HARDWARE TO BE BLACK.

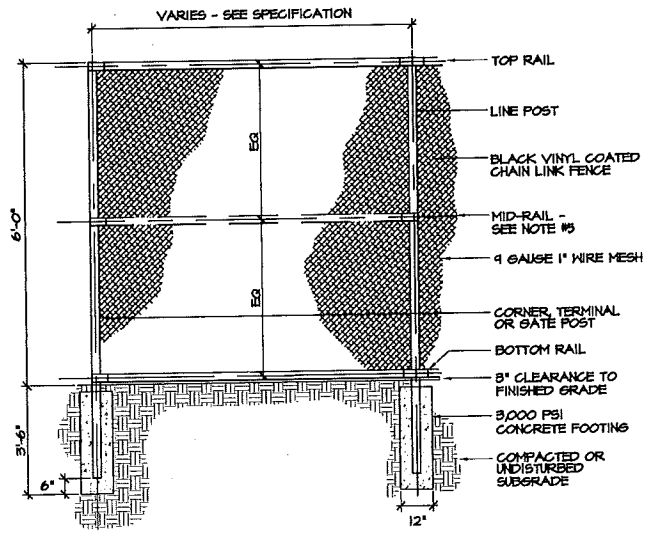

10 BLACK VINYL COATED CHAIN LINK FENCE

SCALE: 3/8" = 1'- 0"

Copyright John G. Crowe, Associates Inc. 2013

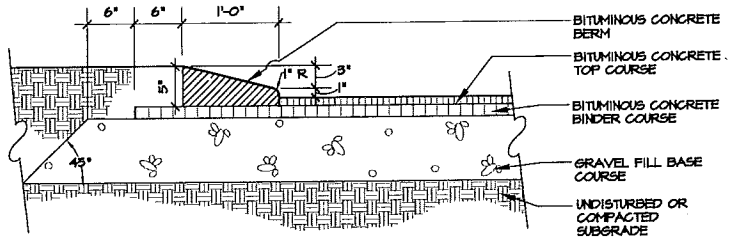

1 BITUMINOUS CONCRETE BERM

SCALE: 1" = 1'-0"

NOTES:

1. CEMENT CONCRETE SHALL EXTEND TO A DEPTH OF 6" FROM THE BOTTOM OF THE BITUMINOUS CONCRETE TOP COURSE.
2. ANY CLASS OF CEMENT CONCRETE ACCEPTABLE UNDER SECTION M4 OF THE MASS. "SSHB" MAY BE USED.

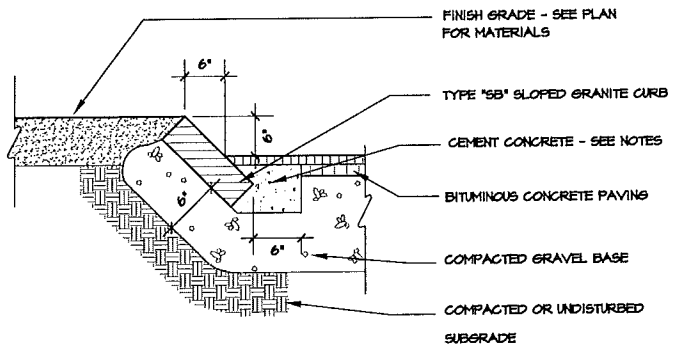

2 SLOPED GRANITE CURB WITH CONCRETE BEDDING

SCALE: 1" = 1'-0"

NOTES:

1. INSTALL CONCRETE INFILL ONLY IF CURB IS TO BE SET AFTER GRAVEL BASE IS IN PLACE, OTHERWISE CEMENT CONCRETE WILL BE ELIMINATED AND GRAVEL BROUGHT UP TO THE BOTTOM OF THE BASE OR BINDER COURSE.
2. CEMENT CONCRETE SHALL EXTEND TO THE BOTTOM OF THE BITUMINOUS CONCRETE TOP COURSE.
3. ANY CLASS OF CEMENT CONCRETE ACCEPTABLE UNDER SECTION M4 OF THE MASS. "SSHB" MAY BE USED.
4. TYPE VA-4 GRANITE CURBING TO HAVE A 6" REVEAL. TYPE VA-3 CURBING TO HAVE AN 8" REVEAL. SEE PLANS FOR LOCATION.

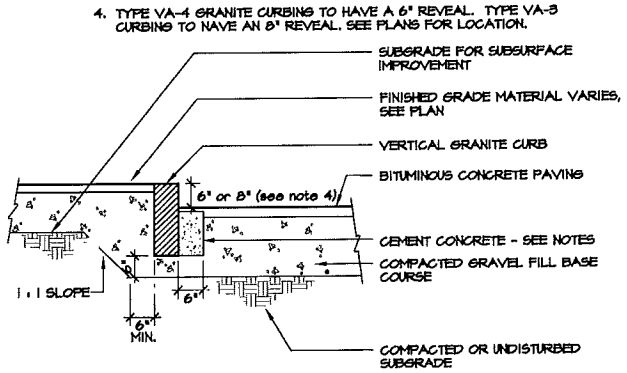

3 VERTICAL GRANITE CURB

SCALE: 1/2" = 1'-0"

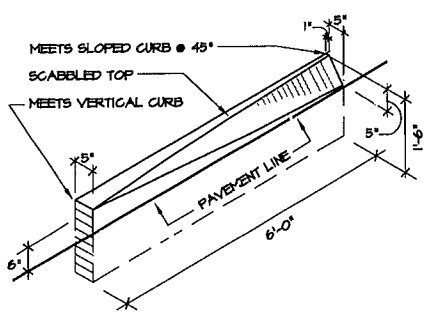

4 GRANITE TRANSITION CURB (VERT. TO SLOPED)

SCALE: 1/2" = 1'-0"

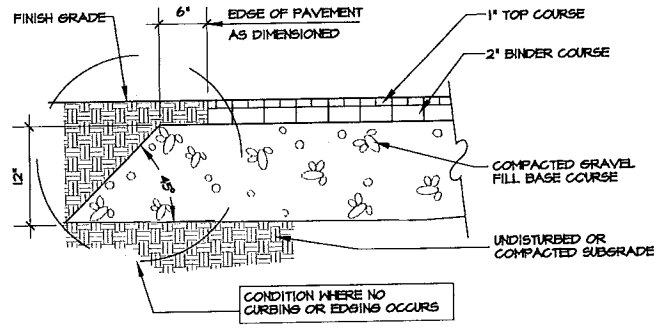

5 BITUMINOUS CONCRETE ROADWAY PAVEMENT (TYPE A)

SCALE: 1" = 1'-0"

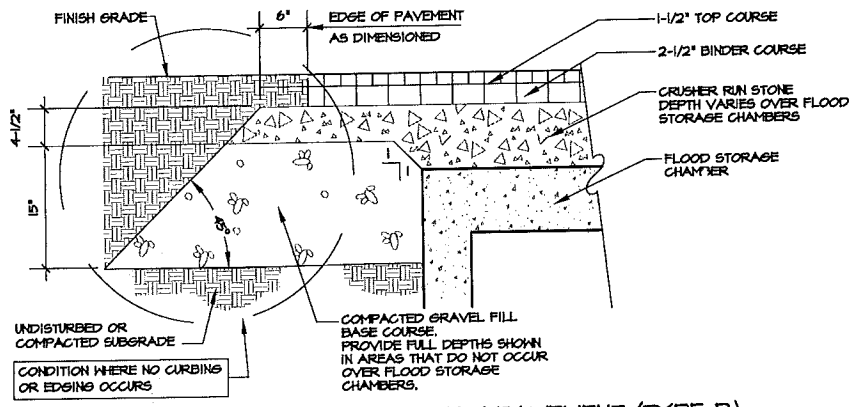

6 BITUMINOUS CONCRETE ROADWAY PAVEMENT (TYPE B)

SCALE: 1" = 1'-0"

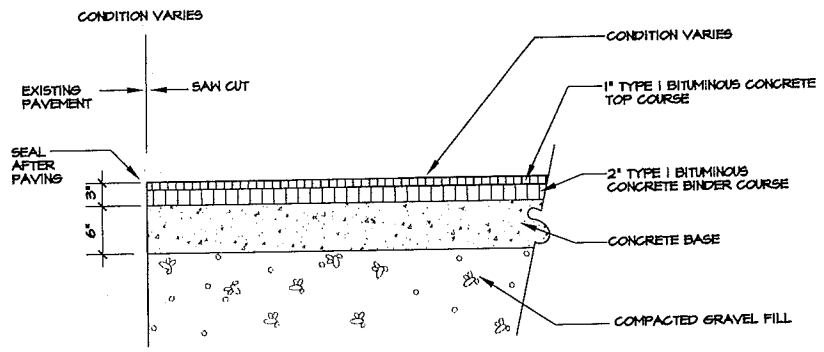

7 BITUMINOUS CONCRETE PATCH DETAIL

SCALE: 1" = 1'-0"

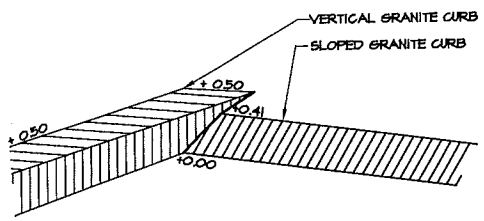

8 CURB TRANSITION: VERTICAL GRANITE CURB TO SLOPED GRANITE CURB

SCALE: 1" = 1'-0"

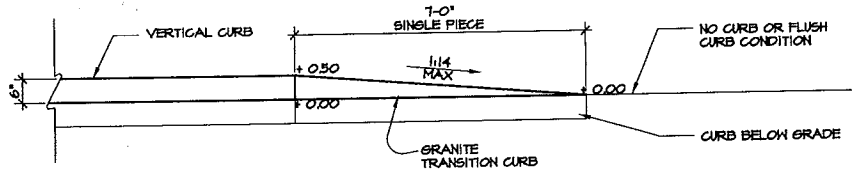

9 VERTICAL GRANITE CURB TO NO CURB OR FLUSH CURB TRANSITION

SCALE: 1/2" = 1'-0"

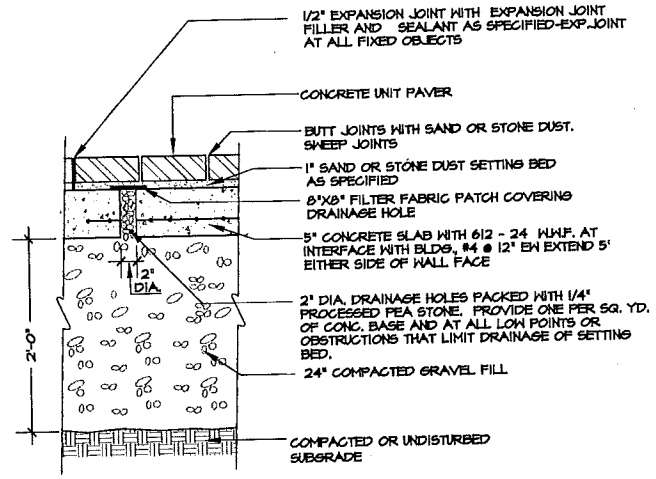

10 UNIT CONCRETE PAVER ON CONCRETE BASE

SCALE: 1" = 1'-0"

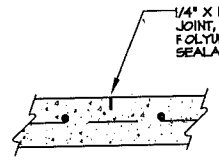

CONTROL JOINT

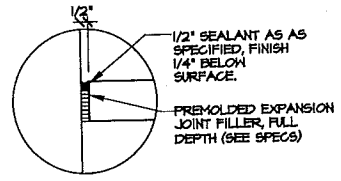

A - SECTION - EXPANSION JOINT

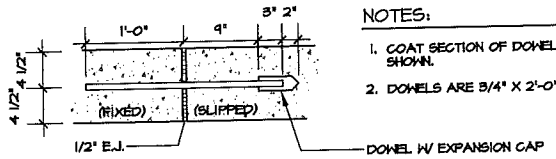

DOWELED TRAVERSE EXPANSION JOINT

NOTES:

1. COAT SECTION OF DOWEL WITH GREASE AS SHOWN.
2. DOWELS ARE 3/4" X 2'-0" LONG, @ 12" O.C.

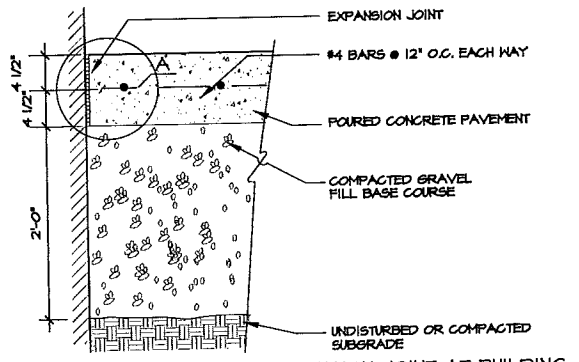

TYPICAL SECTION @ EXPANSION JOINT AT BUILDING

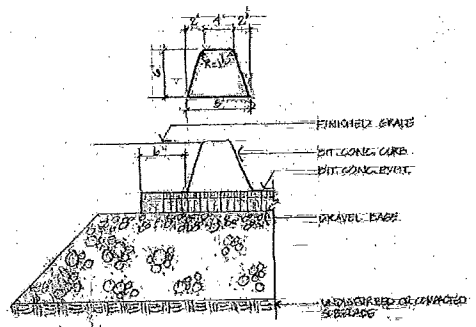

13 BITUMINOUS CONCRETE CURB

SCALE: 1/4" = 1'-0"

11 CONCRETE PAVING AT SERVICE AREA

SCALE: 1" = 1'-0"

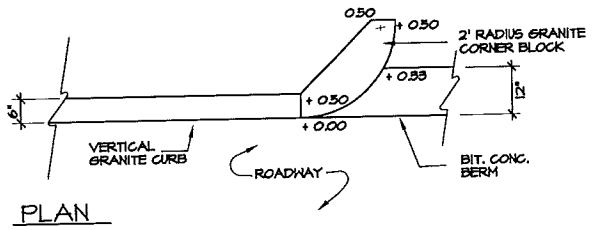

PLAN

12 TRANSITION CURB (BIT. CONC. BERM TO VERT. GRANITE)

SCALE: 1/2" = 1'-0"

I, _____, CLERK OF THE TOWN OF FRAMINGHAM, RECEIVED AND RECORDED APPROVAL FROM THE PLANNING BOARD OF THIS PLAN ON _____ AND NO APPEAL WAS TAKEN FOR TWENTY (20) DAYS THEREAFTER. SAID TWENTY (20) DAY APPEAL PERIOD ENDED ON _____

FRAMINGHAM PLANNING BOARD
SITE PLAN REVIEW

_____

_____

_____

_____

_____

_____

DATE: _____

THIS DOCUMENT OF THE PLANNING BOARD SHOULD BE CONSTRUED TO BE DETERMINATION OF CONFORMANCE WITH ZONING REGULATIONS.

Copyright John G. Crowe, Associates Inc. 2013

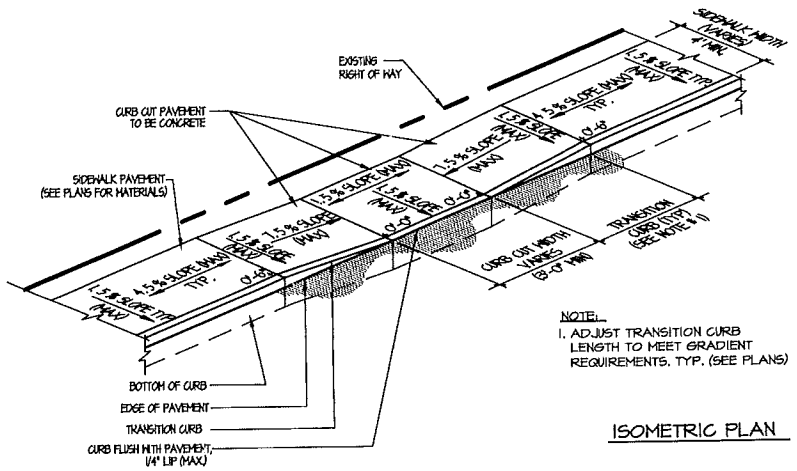

NOTE:
1. ADJUST TRANSITION CURB LENGTH TO MEET GRADIENT REQUIREMENTS. TYP. (SEE PLANS)

ISOMETRIC PLAN

1 TYPICAL AAB CURB CUT - TYPE A

SCALE: N.T.S

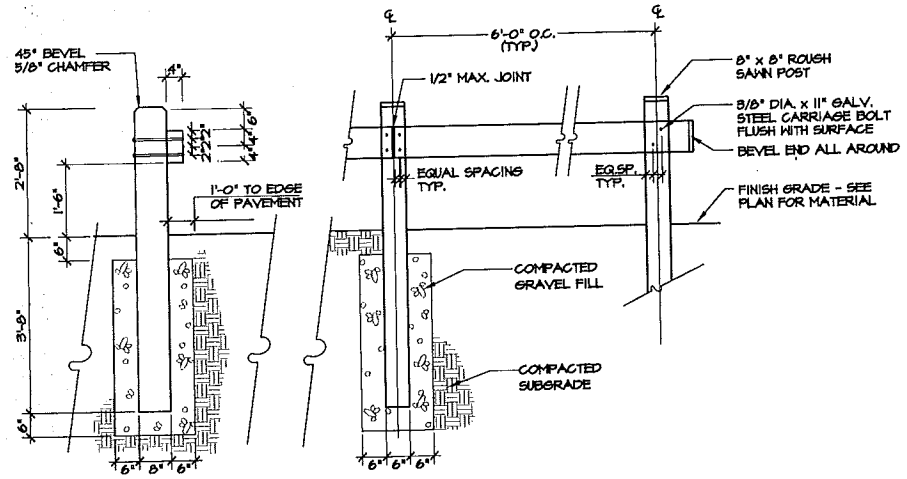

4 WOOD GUARD RAIL

SCALE: 1/2" = 1'-0"

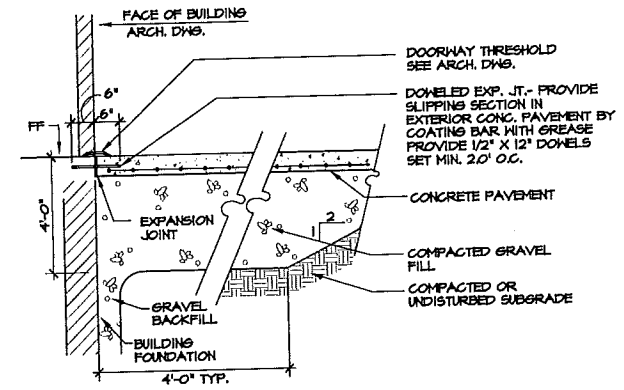

7 CONCRETE PAVEMENT AT DOORWAYS

SCALE: N.T.S.

I, _____
CLERK OF THE TOWN OF FRAMINGHAM, RECEIVED AND RECORDED APPROVAL FROM THE PLANNING BOARD OF THIS PLAN ON _____ AND NO APPEAL WAS TAKEN FOR TWENTY (20) DAYS THEREAFTER. SAID TWENTY (20) DAY APPEAL PERIOD ENDED ON _____

FRAMINGHAM PLANNING BOARD
SITE PLAN REVIEW

_____
_____
_____
_____
_____
_____
_____
_____

DATE: _____

THIS DOCUMENT OF THE PLANNING BOARD SHOULD BE CONSTRUED TO BE DETERMINATION OF CONFORMANCE WITH ZONING REGULATIONS.

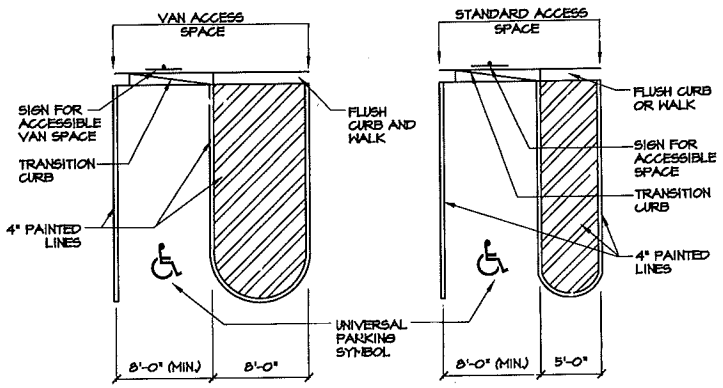

2 TYPICAL ACCESSIBLE PARKING LAYOUT

SCALE: 1/8" = 1'-0"

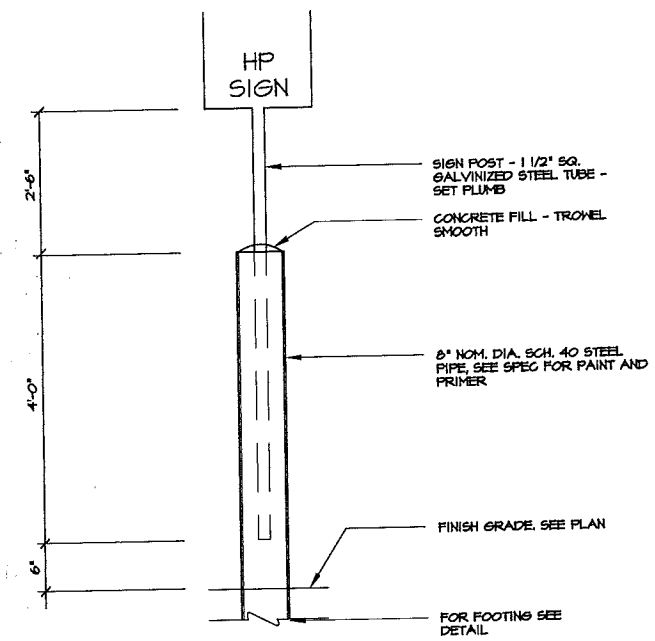

5 STEEL BOLLARD W/ SIGN

SCALE: 1" = 1'- 0"

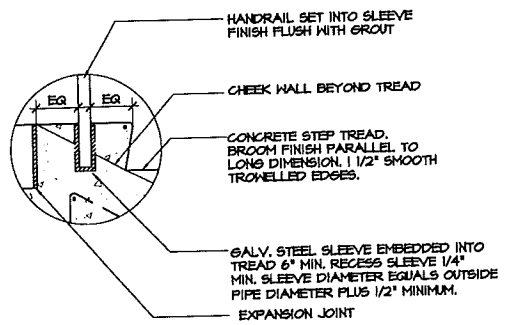

A. HANDRAIL SLEEVE

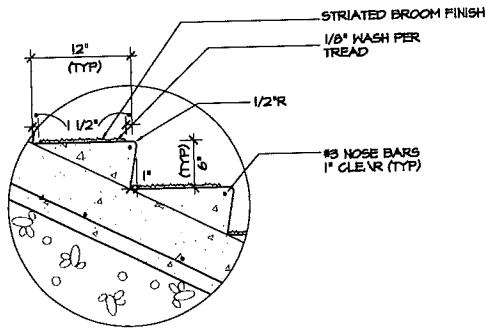

B. TREAD DETAIL

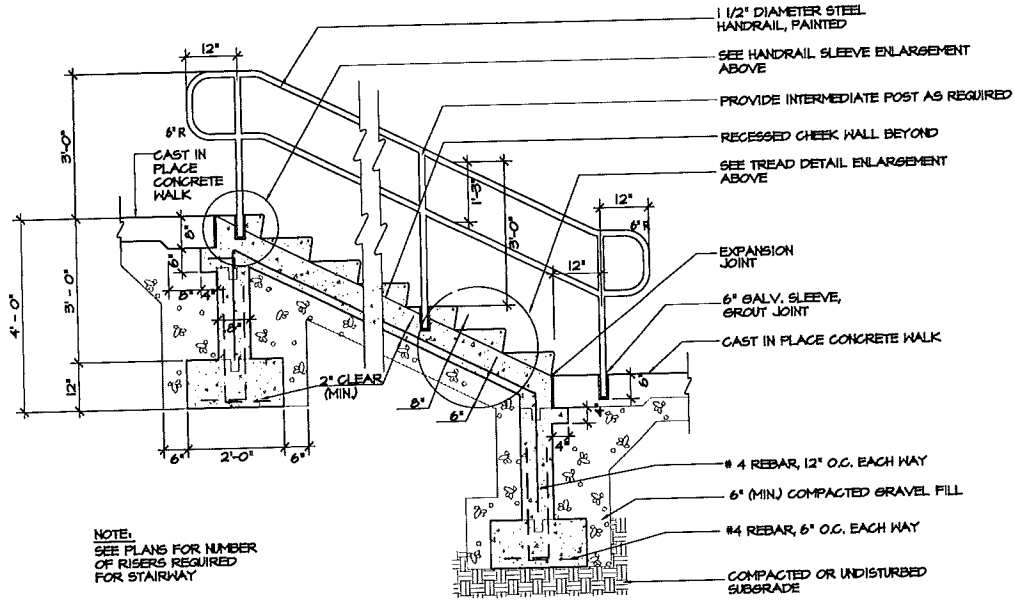

NOTE:
SEE PLANS FOR NUMBER OF RISERS REQUIRED FOR STAIRWAY

SECTION A-A

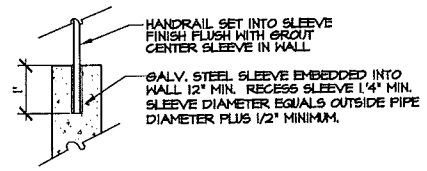

SECTION OF POST SET IN WALL

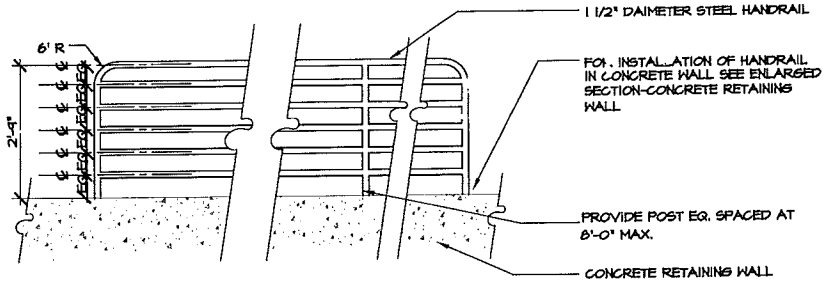

ELEVATION

3 STEEL HANDRAIL IN CONCRETE RETAINING WALL

SCALE: 1/2" = 1'-0"

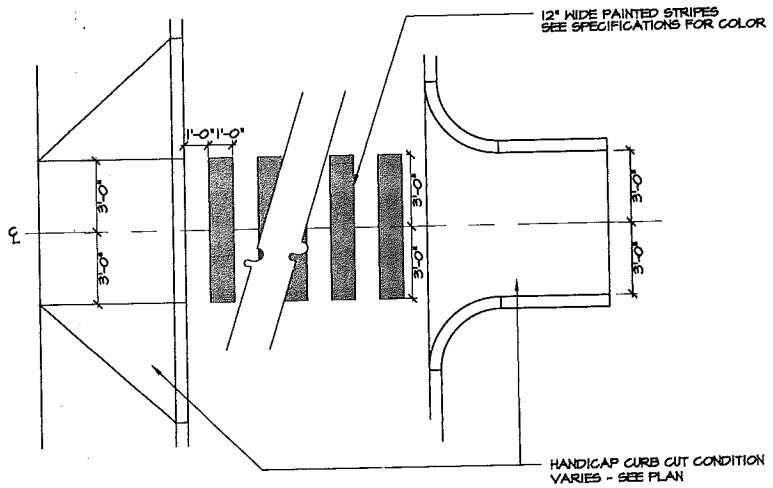

6 PAINTED CROSS WALK

SCALE: 1/4" = 1'- 0"

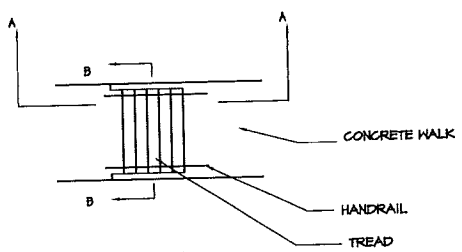

PLAN VIEW

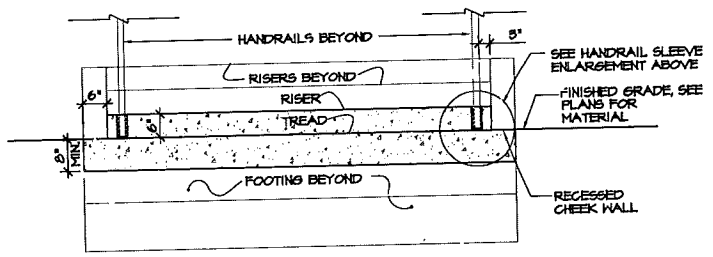

SECTION B-B

8 TYPICAL CONCRETE STAIRS & RECESSED CHEEK WALL

SCALE: 1/2" = 1'-0"

Copyright John G. Crowe, Associates Inc. 2013

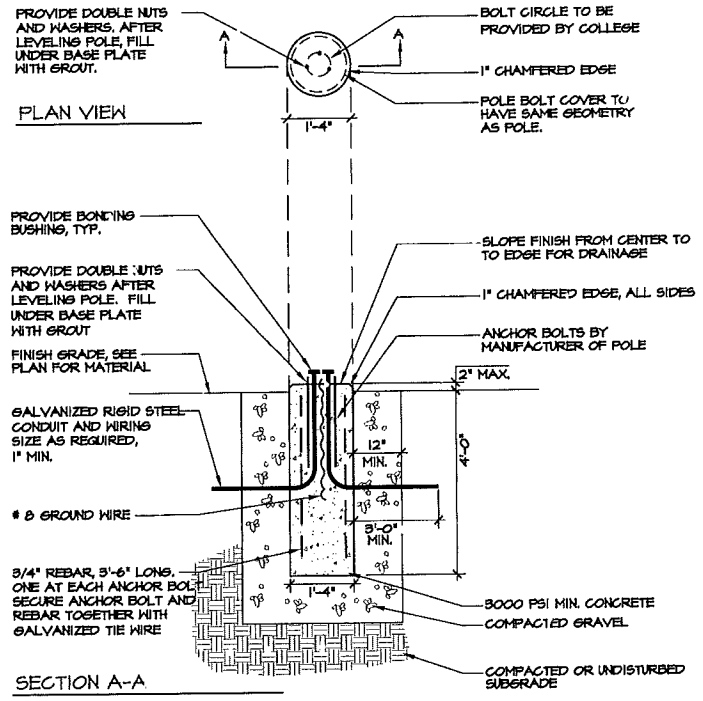

NOTES:

1. FIXTURE, POLE, AND BASE PLATE TO BE PROVIDED BY COLLEGE.
2. LOCATE ANCHOR BOLTS SUCH THAT THE BOLT COVER AND POLE ARE CENTERED ON THE POLE BASE
3. CONNECT CIRCUIT GROUND WIRE TO THE POLE
4. HEIGHT OF BASE ABOVE FINISHED GRADE SHALL BE AS DETERMINED BY L.A.

1 SITE LUMINAIRE POLE BASE

SCALE: NTS

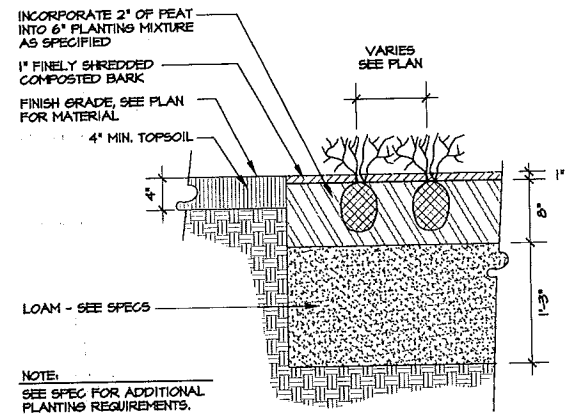

NOTE:
SEE SPEC FOR ADDITIONAL PLANTING REQUIREMENTS.

4 GROUNDCOVER / PERENNIAL PLANTING

SCALE: 1" = 1'-0"

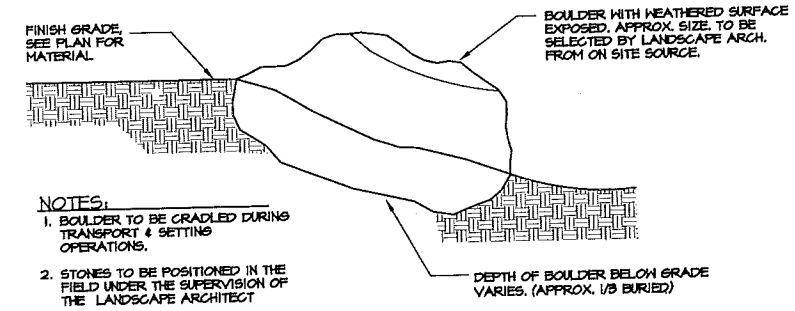

NOTES:

1. BOULDER TO BE CRADLED DURING TRANSPORT & SETTING OPERATIONS.
2. STONES TO BE POSITIONED IN THE FIELD UNDER THE SUPERVISION OF THE LANDSCAPE ARCHITECT

1 LANDSCAPE BOULDER

SCALE: 1/2" = 1' - 0"

CLERK OF THE TOWN OF FRAMINGHAM, REQUEST FOR APPROVAL FROM THE PLANNING BOARD OF THIS PLAN ON _____ AND NO APPEAL WAS TAKEN FOR TWENTY (20) DAYS THEREAFTER. SAID TWENTY (20) DAY APPEAL PERIOD ENDED ON _____

FRAMINGHAM PLANNING BOARD
SITE PLAN REVIEW

_____

_____

_____

_____

_____

_____

_____

DATE: _____

THIS DOCUMENT OF THE PLANNING BOARD SHOULD BE CONSTRUED TO BE DETERMINATION OF CONFORMANCE WITH ZONING REGULATIONS.

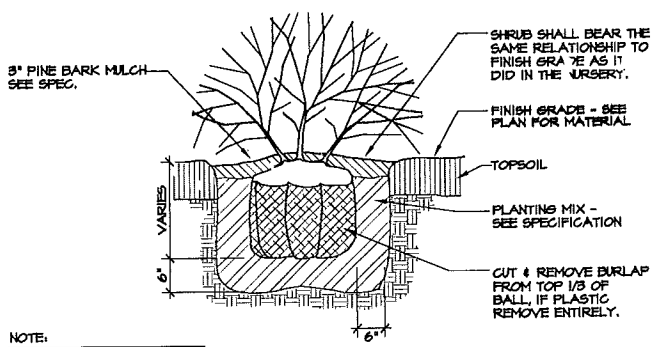

NOTE:
SEE SPEC FOR ADDITIONAL PLANTING REQUIREMENTS.

2 TYPICAL SHRUB PLANTING

SCALE: 1/2" = 1'-0"

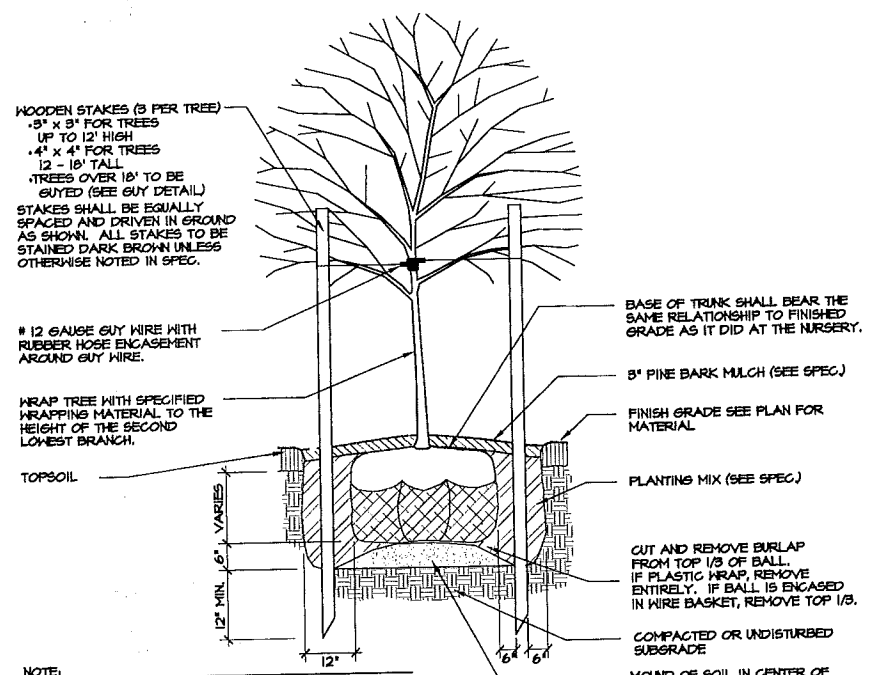

NOTE:

1. SEE SPECIFICATIONS FOR ADDITIONAL PLANTING REQUIREMENTS.
2. HEIGHT OF STAKE ABOVE GROUND EQUALS TREE HEIGHT x 0.5, DEPTH OF TREE STAKE BELOW GROUND EQUALS TREE HEIGHT x 0.25

5 TYPICAL TREE PLANTING

SCALE: 1/2" = 1'-0"

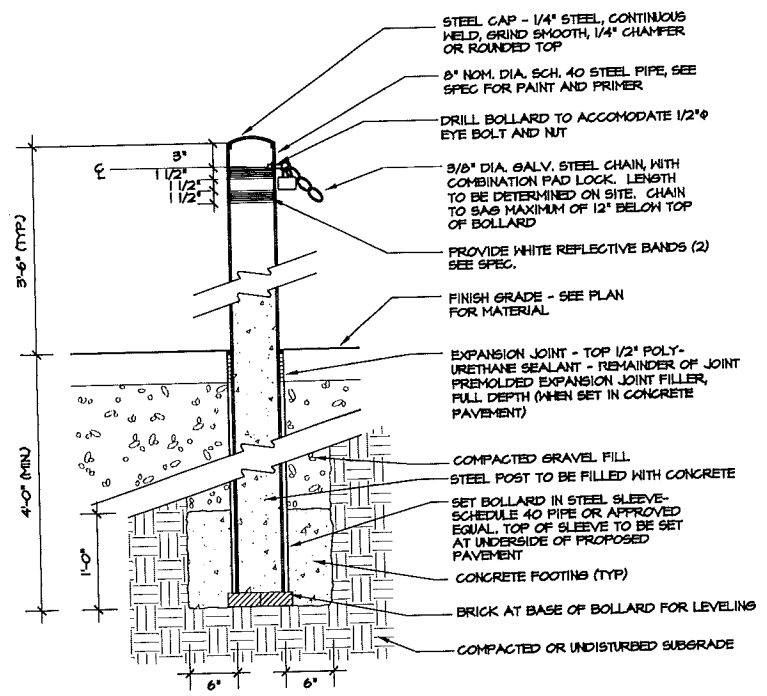

7 STEEL BOLLARD WITH CHAIN @ FIRE ACCESS ROAD

SCALE: 1" = 1'- 0"

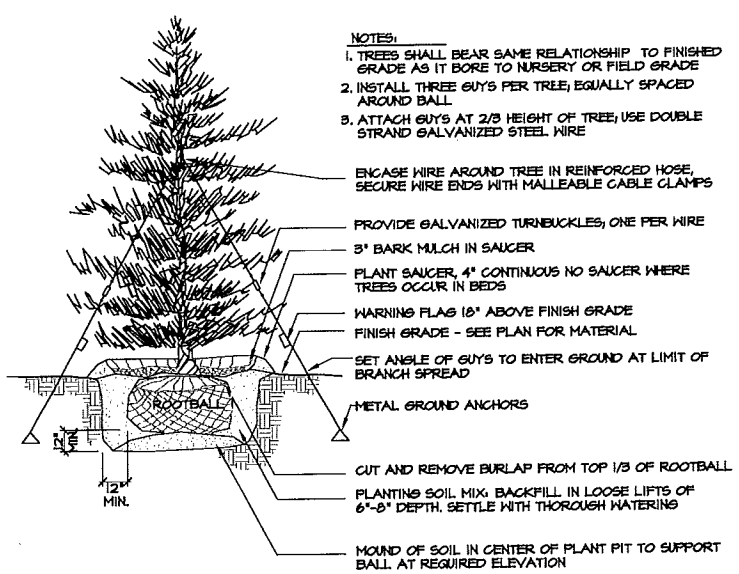

NOTES:

1. TREES SHALL BEAR SAME RELATIONSHIP TO FINISHED GRADE AS IT BORE TO NURSERY OR FIELD GRADE
2. INSTALL THREE GUYS PER TREE; EQUALLY SPACED AROUND BALL
3. ATTACH GUYS AT 2/3 HEIGHT OF TREE; USE DOUBLE STRAND GALVANIZED STEEL WIRE

ENCASE WIRE AROUND TREE IN REINFORCED HOSE, SECURE WIRE ENDS WITH MALLEABLE CABLE CLAMPS
PROVIDE GALVANIZED TURNBUCKLES; ONE PER WIRE
3" BARK MULCH IN SAUCER
PLANT SAUCER, 4" CONTINUOUS NO SAUCER WHERE TREES OCCUR IN BEDS
WARNING FLAG 18" ABOVE FINISH GRADE
FINISH GRADE - SEE PLAN FOR MATERIAL
SET ANGLE OF GUYS TO ENTER GROUND AT LIMIT OF BRANCH SPREAD
METAL GROUND ANCHORS
CUT AND REMOVE BURLAP FROM TOP 1/3 OF ROOTBALL
PLANTING SOIL MIX; BACKFILL IN LOOSE LIFTS OF 6"-8" DEPTH. SETTLE WITH THOROUGH WATERING
MOUND OF SOIL IN CENTER OF PLANT PIT TO SUPPORT BALL AT REQUIRED ELEVATION

3 EVERGREEN TREE PLANTING

SCALE: 1/4" = 1'-0

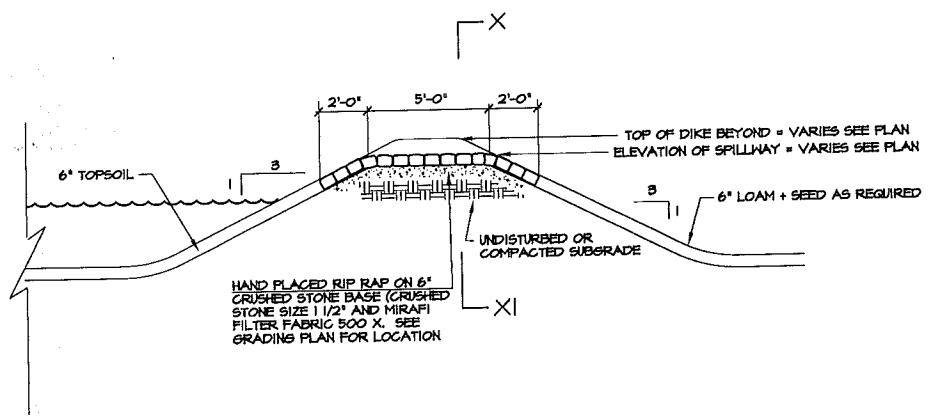

SECTION Y-YI

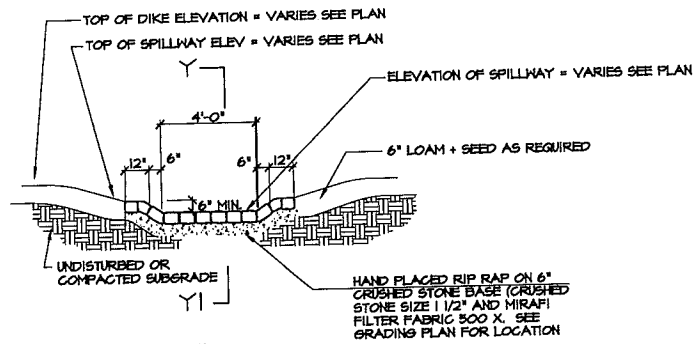

SECTION X-XI

6 SPILLWAY AT INFILTRATION RETENTION BASINS

SCALE: 1/4" = 1'-0"

Copyright John G. Crowe, Associates Inc. 2013

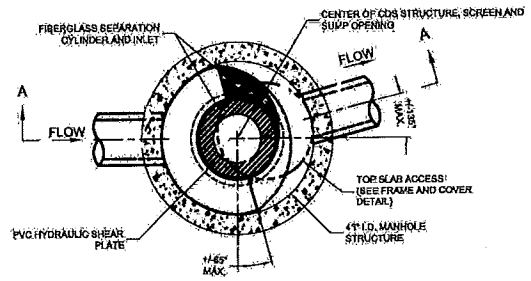

PLAN VIEW B-B
N.T.S.

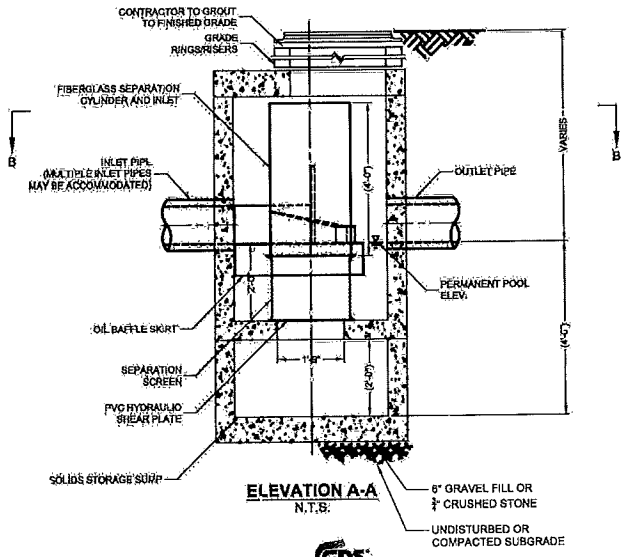

ELEVATION A-A
N.T.S.

CDS

CDS2015-4-C DESIGN NOTES

CDS2015-4-C RATED TREATMENT CAPACITY IS 1.4 CFS, OR PER LOCAL REGULATIONS. MAXIMUM HYDRAULIC INTERNAL BYPASS CAPACITY IS 10.0 CFS. IF THE SITE CONDITIONS EXCEED 10.0 CFS, AN UPSTREAM BYPASS STRUCTURE IS REQUIRED.

THE STANDARD CDS2015-4-C CONFIGURATION IS SHOWN. ALTERNATE CONFIGURATIONS ARE AVAILABLE AND ARE LISTED BELOW. SOME CONFIGURATIONS MAY BE COMBINED TO SUIT SITE REQUIREMENTS.

CONFIGURATION DESCRIPTION
GRATED INLET ONLY (NO INLET PIPE)
GRATED INLET WITH INLET PIPE OR PIPES
CURB INLET ONLY (NO INLET PIPE)
CURB INLET WITH INLET PIPE OR PIPES

FRAME AND COVER
(DIAMETER VARIES)
N.T.S.

SITE SPECIFIC DATA REQUIREMENTS

STRUCTURE ID			
WATER QUALITY FLOW RATE (CFS)			*
PEAK FLOW RATE (CFS)			*
RETURN PERIOD OF PEAK FLOW (YRS)			*
SCREEN APERTURE (2400 OR 4700)			*
PIPE DATA:	I.E.	MATERIAL	DIAMETER
INLET PIPE 1	*	*	*
INLET PIPE 2	*	*	*
OUTLET PIPE	*	*	*
RIM ELEVATION			*
ANTI-FLOTATION BALLAST		WIDTH	HEIGHT
		*	*

NOTES/SPECIAL REQUIREMENTS:

* PER ENGINEER OF RECORD

GENERAL NOTES
1. CONTECH TO PROVIDE ALL MATERIALS UNLESS NOTED OTHERWISE.
2. DIMENSIONS MARKED WITH ( ) ARE REFERENCE DIMENSIONS. ACTUAL DIMENSIONS MAY VARY.
3. FOR FABRICATION DRAWINGS WITH DETAILED STRUCTURE DIMENSIONS AND WEIGHTS, PLEASE CONTACT YOUR CONTECH CONSTRUCTION PRODUCTS REPRESENTATIVE. www.contech-cpi.com
4. CDS WATER QUALITY STRUCTURE SHALL BE IN ACCORDANCE WITH ALL DESIGN DATA AND INFORMATION CONTAINED IN THIS DRAWING.
5. STRUCTURE SHALL MEET AASHTO HS20 AND CASTINGS SHALL MEET AASHTO M306 LOAD RATING, ASSUMING GROUNDWATER ELEVATION AT, OR BELOW, THE OUTLET PIPE INVERT ELEVATION. ENGINEER OF RECORD TO CONFIRM ACTUAL GROUNDWATER ELEVATION.
6. PVC HYDRAULIC SHEAR PLATE IS PLACED ON SHELF AT BOTTOM OF SCREEN CYLINDER. REMOVE AND REPLACE AS NECESSARY DURING MAINTENANCE CLEANING.

INSTALLATION NOTES
1. ANY SUB-BASE, BACKFILL DEPTH, AND/OR ANTI-FLOTATION PROVISIONS ARE SITE-SPECIFIC DESIGN CONSIDERATIONS AND SHALL BE SPECIFIED BY ENGINEER OF RECORD.
2. CONTRACTOR TO PROVIDE EQUIPMENT WITH SUFFICIENT LIFTING AND REACH CAPACITY TO LIFT AND SET THE CDS MANHOLE STRUCTURE (LIFTING CLUTCHES PROVIDED).
3. CONTRACTOR TO ADD JOINT SEALANT BETWEEN ALL STRUCTURE SECTIONS, AND ASSEMBLE STRUCTURE.
4. CONTRACTOR TO PROVIDE, INSTALL, AND GROUT PIPES. MATCH PIPE INVERTS WITH ELEVATIONS SHOWN.
5. CONTRACTOR TO TAKE APPROPRIATE MEASURES TO ASSURE UNIT IS WATER TIGHT, HOLDING WATER TO FLOW LINE INVERT MINIMUM. IT IS SUGGESTED THAT ALL JOINTS BELOW PIPE INVERTS ARE GROUTED.

CONTECH CONSTRUCTION PRODUCTS INC. www.contech-cpi.com
9025 Centre Pointe Dr., Suite 400, West Chester, OH 45069
800-338-1122 513-645-7000 513-645-7993 FAX

CDS2015-4-C
CDS INLINE
STANDARD DETAIL

1 CONTECH CDS 2015-4-C TREATMENT SYSTEM
SCALE: N.T.S.

CLERK OF THE TOWN OF FRAMINGHAM, A CERTIFICATE OF NO APPEAL WAS RECEIVED FROM THE PLANNING BOARD OF THIS PLAN ON _____ AND NO APPEAL WAS TAKEN FOR TWENTY (20) DAYS THEREAFTER. SAID TWENTY (20) DAY APPEAL PERIOD ENDED ON _____

FRAMINGHAM PLANNING BOARD
SITE PLAN REVIEW

_____

_____

_____

_____

_____

_____

_____

DATE: _____

THIS DOCUMENT OF THE PLANNING BOARD SHOULD BE CONSTRUED TO BE DETERMINATION OF CONFORMANCE WITH ZONING REGULATIONS.

NOTES:
1. INSPECTION PORT MUST BE CONNECTED THROUGH KNOCK-OUT LOCATED AT CENTER OF CHAMBER.
2. ALL SCHEDULE 40 FITTINGS TO BE SOLVENT CEMENTED.

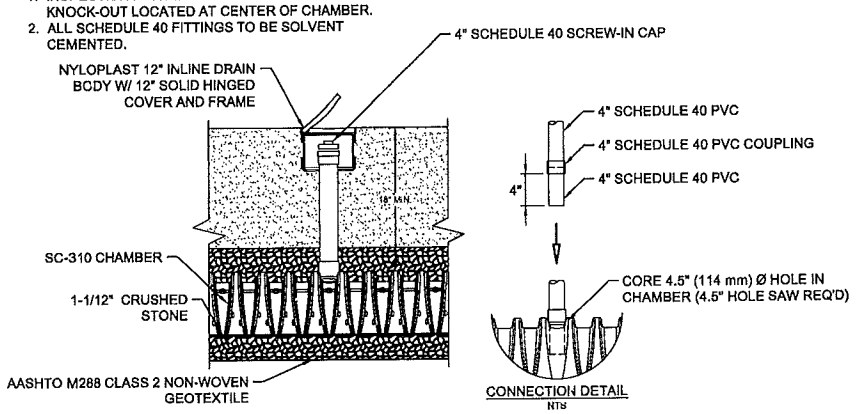

CONNECTION DETAIL
NTS

2 STORMTECH SC-310 INSPECTION PORT DETAIL
SCALE: N.T.S.

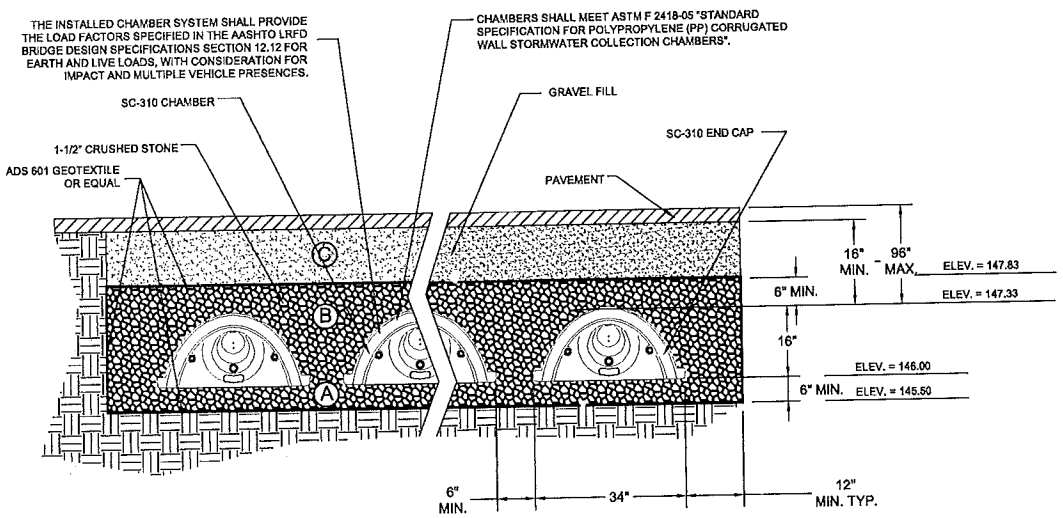

THIS CROSS SECTION DETAILS THE REQUIREMENTS NECESSARY TO SATISFY THE LOAD FACTORS SPECIFIED IN THE AASHTO LRFD BRIDGE DESIGN SPECIFICATIONS SECTION 12.12 FOR EARTH AND LIVE LOADS USING STORMTECH CHAMBERS

3 STORMTECH SC-310 INFILTRATION SYSTEM CROSS SECTION
SCALE: N.T.S.

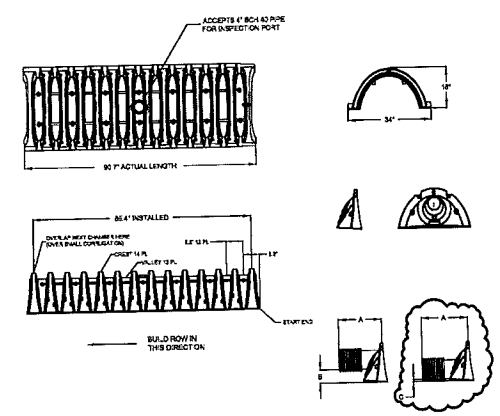

NOMINAL CHAMBER SPECIFICATIONS
SIZE (W x H x INSTALLED LENGTH) 34.0" x 18.0" x 85.4"
CHAMBER STORAGE 14.7 CUBIC FEET
MINIMUM INSTALLED STORAGE 31.0 CUBIC FEET
WEIGHT 35 LBS.

STUBS AT TOP OF END CAP FOR PARTS NUMBERS ENDING WITH "T"

STUBS AT BOTTOM OF END CAP FOR PARTS NUMBERS ENDING WITH "B"

PART #	CHAMBER	PIPE SIZE	A	B	C
SC310PE04T	SC-310	4 in (100 mm)	9.80 in (249 mm)	6.80 in (147 mm)	N/A
SC310PE06B	SC-310	6 in (150 mm)	11.80 in (300 mm)	N/A	2.00 in (51 mm)
SC310PE06T	SC-310	6 in (150 mm)	11.80 in (300 mm)	2.00 in (51 mm)	N/A
SC310PE08T	SC-310	8 in (200 mm)	13.80 in (350 mm)	3.80 in (98 mm)	N/A
SC310PE08B	SC-310	8 in (200 mm)	13.80 in (350 mm)	N/A	0.80 in (18 mm)
SC310PE10T	SC-310	10 in (250 mm)	15.75 in (401 mm)	1.95 in (50 mm)	N/A
SC310PE10B	SC-310	10 in (250 mm)	15.75 in (401 mm)	N/A	0.75 in (19 mm)
SC310PE12B	SC-310	12 in (300 mm)	19.55 in (343 mm)	N/A	0.80 in (20 mm)

NOTE: ALL DIMENSIONS ARE NOMINAL

ALL STUBS, EXCEPT FOR THE SC310PE12B ARE PLACED AT BOTTOM OF END CAP SUCH THAT THE OUTSIDE DIAMETER OF THE STUB IS FLUSH WITH THE BOTTOM OF THE END CAP. FOR ADDITIONAL INFORMATION CONTACT STORMTECH AT 1-888-892-2694.

* FOR THE SC310PE12B THE 12" STUB LIES BELOW THE BOTTOM OF THE END CAP APPROXIMATELY 0.25". BACKFILL MATERIAL SHOULD BE REMOVED FROM BELOW THE N-12 STUB SO THAT THE FITTING SETS LEVEL.

4 STORMTECH SC-310 TECHNICAL SPEC.
SCALE: N.T.S.

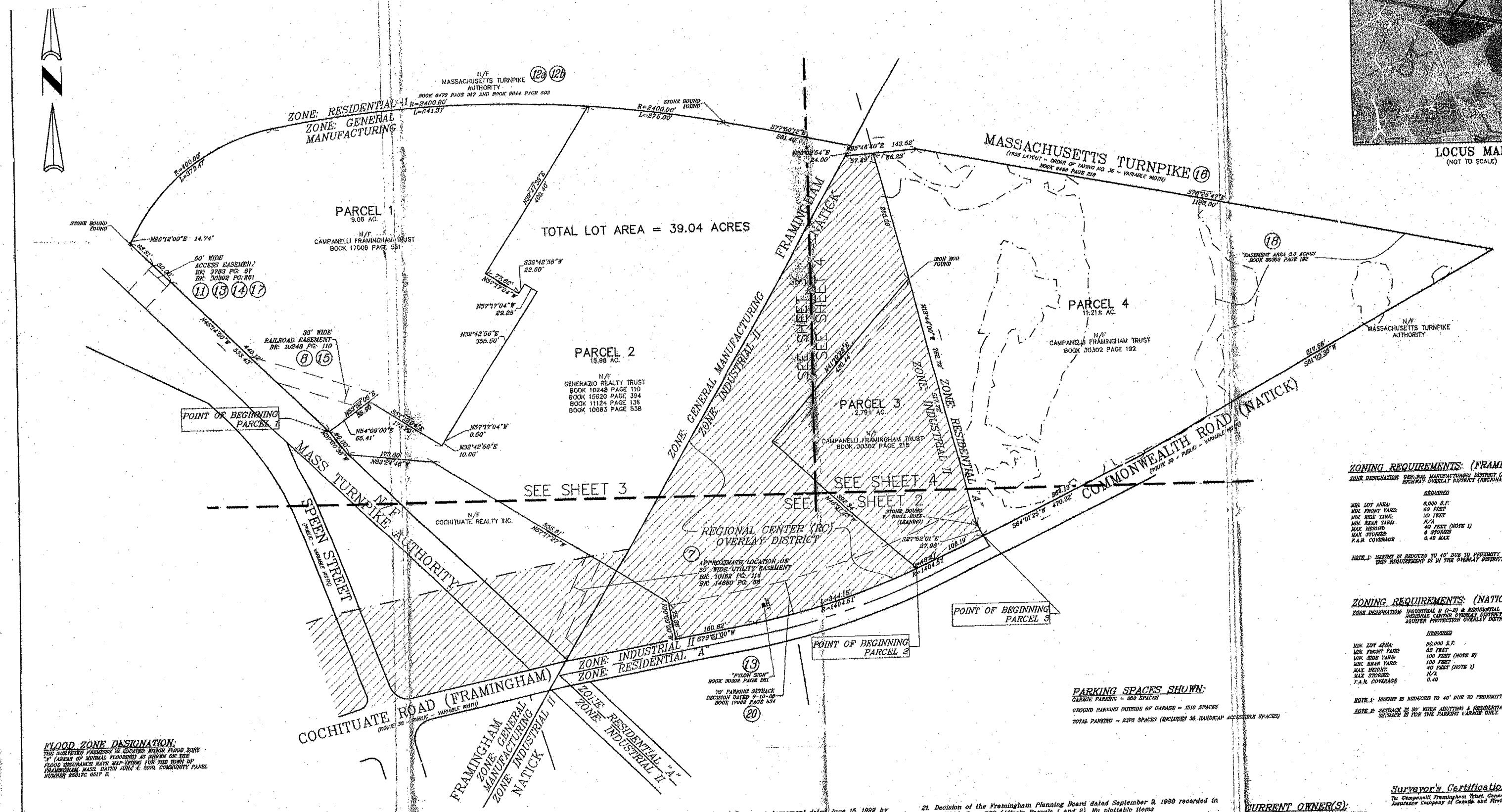

LOCUS MAP
(NOT TO SCALE)

FLOOD ZONE DESIGNATION:

THE SURVEYED PREMISES IS LOCATED WITHIN FLOOD ZONE "X" (AREAS OF MINIMAL FLOODING) AS SHOWN ON THE FLOOD INSURANCE RATE MAP (FIRM) FOR THE TOWN OF FRAMINGHAM, MASS. DATED JUNE 4, 2010, COMMUNITY PANEL NUMBER 25017C 0517 E.

PLAN REFERENCES:

1.) PLAN NO. 840 OF 1968 IN DEED BOOK 17006 PAGE 581
2.) PLAN NO. 1265 (A OF 2) OF 1982 IN DEED BOOK 10083 PAGE 538
3.) PLAN NO. 636 OF 1985 IN DEED BOOK 11124 PAGE 136
4.) PLAN NO. 957 OF 1988 IN DEED BOOK 10083 PAGE 537
5.) PLAN NO. 833 (A OF 4) OF 1988 IN DEED BOOK 11181 PAGE 419
6.) PLAN NO. 458 OF 1988 IN DEED BOOK 10248 PAGE 110
7.) PLAN NO. 490 (1 AND 2) OF 1997 IN DEED BOOK 27511 PAGES 241 & 242
8.) PLAN NO. 939 (8 OF 11) OF 1963 IN DEED BOOK 8473 PAGE 357
9.) PLAN NO. 978 OF 1981 IN DEED BOOK 9844 PAGE 593
10.) PLAN NO. 794 (1 & 2 OF 8) OF 1956 IN DEED BOOK 8458 PAGE 221

GRAPHIC SCALE
(IN FEET)
1 inch = 80 ft.

KELLY ENGINEERING GROUP SHALL NOT BE RESPONSIBLE FOR CONSTRUCTION MEANS, METHODS, TECHNIQUES OR PROCEDURES UTILIZED BY THE CONTRACTOR, NOR FOR THE SAFETY OF PERSONS OR CONTRACTOR'S EMPLOYEES, OR FOR THE FAILURE OF THE CONTRACTOR TO CARRY OUT THE WORK IN ACCORDANCE WITH THE CONTRACT DOCUMENTS.
THE SEAL OF KELLY ENGINEERING GROUP LIMITS FOR THIS PLAN IS LIMITED TO THE EXTENT OF ITS PRE-1978 AND PARTY COST.

COPYRIGHT (C) by KELLY ENGINEERING GROUP, INC.
All Rights Reserved
NO PART OF THIS DOCUMENT MAY BE REPRODUCED, STORED IN A RETRIEVAL SYSTEM, OR TRANSMITTED IN ANY FORM OR BY ANY MEANS, ELECTRONIC, MECHANICAL, PHOTOCOPYING, RECORDING OR OTHERWISE, WITHOUT THE PRIOR WRITTEN PERMISSION OF KELLY ENGINEERING GROUP. ANY UNAUTHORIZED USE OF DOCUMENTS WITHOUT THE WRITTEN PERMISSION OF KELLY ENGINEERING GROUP SHALL ENTITLE IT TO BOTH LEGAL AND EQUITABLE REMEDIES.

SCHEDULE B ITEMS:

(Exceptions in First American Title Insurance Company Commitment for Title Insurance, Commitment No. NCS-616182-2031, Effective Date: November 7, 2011)

7. Rights of New England Sand and Gravel Co., Inc., to draw water from a well and the right of access to such well as set forth in an instrument recorded in Book 14860, Page 88. (As to Parcel 2) Plotted

8. Restriction with respect to drainage and requirement to affect a fence as set forth in a Deed recorded in Book 10248, Page 110. (As to Parcels 1 and 2) Railroad easement plotted, restriction not plottable

9. Utility Easement to New England Telephone and Telegraph Company and Boston Edison Company as set forth in instrument recorded in Book 7377, Page 546. (As to Parcel 2) Not plottable

10. Terms and provisions of an Amended and Restated Ground Lease by and between the Trustees of Generazio Realty Trust, as Lessor, and the Trustees of Campanelli Framingham Trust, as Lessee, dated December 16, 1995, notice of which is recorded in Book 17006, Page 559, as affected by Recognition Agreement dated December 18, 1995 by and between the Trustees of Generazio Realty Trust and Zayre Corporation recorded in Book 17016, Page 596, as further affected by First Amendment to Amended and Restated Ground Lease dated June 16, 1999, notice of which is recorded in Book 30302, Page 217; as further affected by the Consent and Care Agreement regarding Leasehold Mortgages dated June 16, 1999 recorded in Book 30302, Page 232. (As to Parcel 2) No plottable items

11. Lease by and between the Trustees of Campanelli Framingham Trust, as Landlord and Zayre Corp., as Tenant, dated July 26, 1985, notice of which is recorded in Book 17006, Page 583, as affected by Recognition Agreement recorded in Book 17016, Page 595, as further affected by an Amendment to Lease by and between the Trustees of Campanelli Framingham Trust as Landlord and The TJX Companies, Inc., successor-in-interest to Zayre Corporation as Tenant dated June 16, 1999 notice of which is recorded in Book 30302, Page 236. (As to Parcel 2) Access easement plotted, no other plottable items

12. Non-access provisions of the Order of Taking No. 44 by the Massachusetts Turnpike Authority dated May 12, 1953 and recorded in Book 8473, Page 357, as affected by Alteration No. 2 dated June 16, 1981 and recorded in Book 9844, Page 593. (Affects Parcels 1 and 2) Plotted

13. Amended and Restated Reciprocal Easement Agreement dated June 16, 1999 by and between the Trustees of Generazio Realty Trust and the Trustees of Campanelli Framingham Trust recorded in Book 30302, Page 261. (Affects Parcels 1, 2, 3 and 4) Access easement plotted and pylon sign plotted, remaining easement are blanket easements

14. Lease by and between the Trustees of Campanelli Framingham Trust as Landlord and TJX as Tenant dated June 16, 1999, notice of which is recorded in Book 30302, Page 247. (Affects a portion of Parcel 2 and all of Parcels 3 and 4). Access easement plotted, no other plottable items

15. Easement for railroad purposes in a strip of land thirty-five (35) feet wide as shown on the plan recorded in Book 10248, Page 110 and as set forth in the deed of the Massachusetts Turnpike Authority to the Trustees of Generazio Realty Trust dated February 21, 1963 and recorded in Book 10248, Page 110. (affects Parcel 1) Plotted

16. Non-access provisions of the Order of Taking No. 36 by the Massachusetts Turnpike Authority dated April 21, 1955 and recorded in Book 8458, Page 218. (Affects Parcel 4) Plotted

17. Terms and provisions of a lease by and between Joseph Campanelli, et al Trustees of Campanelli Framingham Trust, as Landlord, and Zayre Corp., as Tenant, dated July 26, 1985, the Notice of which is recorded in Book 17006, Page 590; as further affected by Amendment to Lease by and between the Trustees of Campanelli Framingham Trust as Landlord and TJX successor-in-interest to Zayre Corporation, as Tenant dated June 16, 1999, notice of which is recorded in Book 30302, Page 242. (Affects Parcel 1) Access easement plotted, no other plottable items

18. Easements, restrictions and other matters set forth in the deed from the Commonwealth of Massachusetts to the Trustees of Campanelli Framingham Trust dated June 14, 1999 recorded on June 16, 1999 in Book 30302, Page 192. (Affects Parcel 4) Plotted

19. Easement granted by the Trustees of Generazio Realty Trust to TechCommons Natick LLC dated December 16, 2008 and recorded in Book 52337, Page 204. non-locus

20. Decision of the Natick Planning Board dated September 10, 1986 recorded in Book 17982, Page 534 (Affects Parcel 2). plotted

21. Decision of the Framingham Planning Board dated September 8, 1986 recorded in Book 17982, Page 529 (Affects Parcels 1 and 2). No plottable items

22. Decision of Natick Zoning Board of Appeals dated January 30, 1990 recorded in Book 20418, Page 381 (Affects Parcel 3). The project identified was never constructed. no plottable items

23. Decision of the Framingham Planning Board dated January 6, 1999 recorded in Book 30024, Page 1 (Affects Parcels 1 and 2). No plottable items

24. Decision of the Natick Zoning Board of Appeals dated December 22, 1998 recorded in Book 30024, Page 20 (Affects Parcels 2, 3 and 4). No plottable items

25. Decision of the Natick Planning Board dated October 20, 1998 recorded in Book 30024, Page 25 (Affects Parcels 2, 3 and 4). No plottable items

26. Decision of the Natick Zoning Board of Appeals dated December 2, 1998 recorded in Book 30024, Page 28 (Affects Parcels 2, 3 and 4). No plottable items

27. Order of Conditions issued by the Natick Conservation Commission on October 15, 1998 recorded in Book 30024, Page 53, as affected by Certificate of Compliance recorded in Book 37920, Page 621 (Affects Parcels 2 and 3). No plottable items

28. Decision of the Framingham Board of Appeals dated December 1, 1998 recorded in Book 30024, Page 80 (Affects Parcels 1 and 2). No plottable items

29. Order of Conditions issued by the Framingham Conservation Commission on November 4, 1998 recorded in Book 30024, Page 84, as affected by Certificate of Compliance recorded in Book 34987, Page 522 (Affects Parcels 1 and 2). No plottable items

30. Decision of the Framingham Planning Board dated January 5, 1999 recorded in Book 30024, Page 60. (Affects Parcels 1 and 2). No plottable items

31. Decision of the Framingham Board of Appeals dated May 4, 1999 recorded in Book 30272, Page 265. (Affects Parcels 1 and 2). No plottable items

NOTED FOR INFORMATION:
Agreement Terminating Slope Easement by and between the Trustees of the Generazio Realty Trust, the Trustees of the Campanelli Framingham Trust and Sun Life Assurance Company of Canada recorded in Book 20302, Page 190

ZONING REQUIREMENTS: (FRAMINGHAM)

ZONE DESIGNATION: GENERAL MANUFACTURING DISTRICT (GI & IN THE HIGHWAY OVERLAY DISTRICT (REGIONAL CENTER)

	REQUIRED
MIN. LOT AREA:	8,000 S.F.
MIN. FRONT YARD:	50 FEET
MIN. SIDE YARD:	30 FEET
MIN. REAR YARD:	N/A
MAX. HEIGHT:	40 FEET (NOTE 1)
MAX. STORIES:	6 STORIES
F.A.R. COVERAGE:	0.40 MAX

NOTE 1: HEIGHT IS REDUCED TO 40' DUE TO PROXIMITY OF A RESIDE THIS REQUIREMENT IS IN THE OVERLAY DISTRICT ONLY.

ZONING REQUIREMENTS: (NATICK)

ZONE DESIGNATION: INDUSTRIAL II (I-II) & RESIDENTIAL A (RSA) REGIONAL CENTER OVERLAY DISTRICT AQUIFER PROTECTION OVERLAY DISTRICT

	REQUIRED
MIN. LOT AREA:	80,000 S.F.
MIN. FRONT YARD:	65 FEET
MIN. SIDE YARD:	100 FEET (NOTE 2)
MIN. REAR YARD:	100 FEET
MAX. HEIGHT:	40 FEET (NOTE 1)
MAX. STORIES:	N/A
F.A.R. COVERAGE:	0.40

NOTE 1: HEIGHT IS REDUCED TO 40' DUE TO PROXIMITY OF A RESID

NOTE 2: SETBACK IS 30' WHEN ADJOINING A RESIDENTIAL ZONING DI SETBACK IS FOR THE PARKING GARAGE ONLY.

PARKING SPACES SHOWN:

GARAGE PARKING = 860 SPACES
GROUND PARKING OUTSIDE OF GARAGE = 1510 SPACES
TOTAL PARKING = 2370 SPACES (INCLUDES 36 HANDICAP ACCESSIBLE SPACES)

CURRENT OWNER(S):

PARCEL 1)... CAMPANELLI FRAMINGHAM TRUST
DEED BOOK: 17006 PAGE: 581

PARCEL 2)... GENERAZIO REALTY TRUST
DEED BOOK: 10248 PAGE: 110
DEED BOOK: 15620 PAGE: 394
DEED BOOK: 11124 PAGE: 136
DEED BOOK: 10083 PAGE: 538

PARCEL 3)... CAMPANELLI FRAMINGHAM TRUST
DEED BOOK: 30302 PAGE: 215

PARCEL 4)... CAMPANELLI FRAMINGHAM TRUST
DEED BOOK: 30302 PAGE: 192

Surveyor's Certification:

To: Campanelli Framingham Trust, Generazio Realty Trust, Sun Life Assurance Company of Canada and First American Title Insurance Company

This is to certify that this map or plat and the survey thereon were made in accordance with the 2011 Minimum Standard Detail Requirements for ALTA/NSPS Land Title Surveys, jointly established and adopted by ALTA and NSPS and includes Items 2, 3, 4, 6(a), 6, 8, 11(b), and 13 of Table A thereof. The field work was completed in November of 2011.

Date: 12/6/11

Steven M. Horsfall, P.L.S.
Reg. No. 41608 within the Commonwealth of Massachusetts

COMMONWEALTH OF MASSACHUSETTS
STEVEN M. HORSFALL
No. 41608

SCALE 1" = 80'			
DATE 12/6/11	REV.	DATE	REVISION	BY
SHEET 1 OF 4			
PLAN NO. 2011-060-ALTA			
DISK REF NO. R:\P\2011-060			
DRAWN BY JPH			
CHKD BY EWH			
APPD BY EWH			

770 COCHITUATE ROAD
FRAMINGHAM/NATICK, MASSACHUSETTS

ALTA/ACSM LAND TITLE SURVEY PLAN

KELLY ENGINEERING GROUP, INC.
CIVIL ENGINEERING CONSULTANTS
0 CAMPANELLI DRIVE - BRAINTREE MA - 02184
PHONE: 781 843 4333 FAX: 781 843 0028

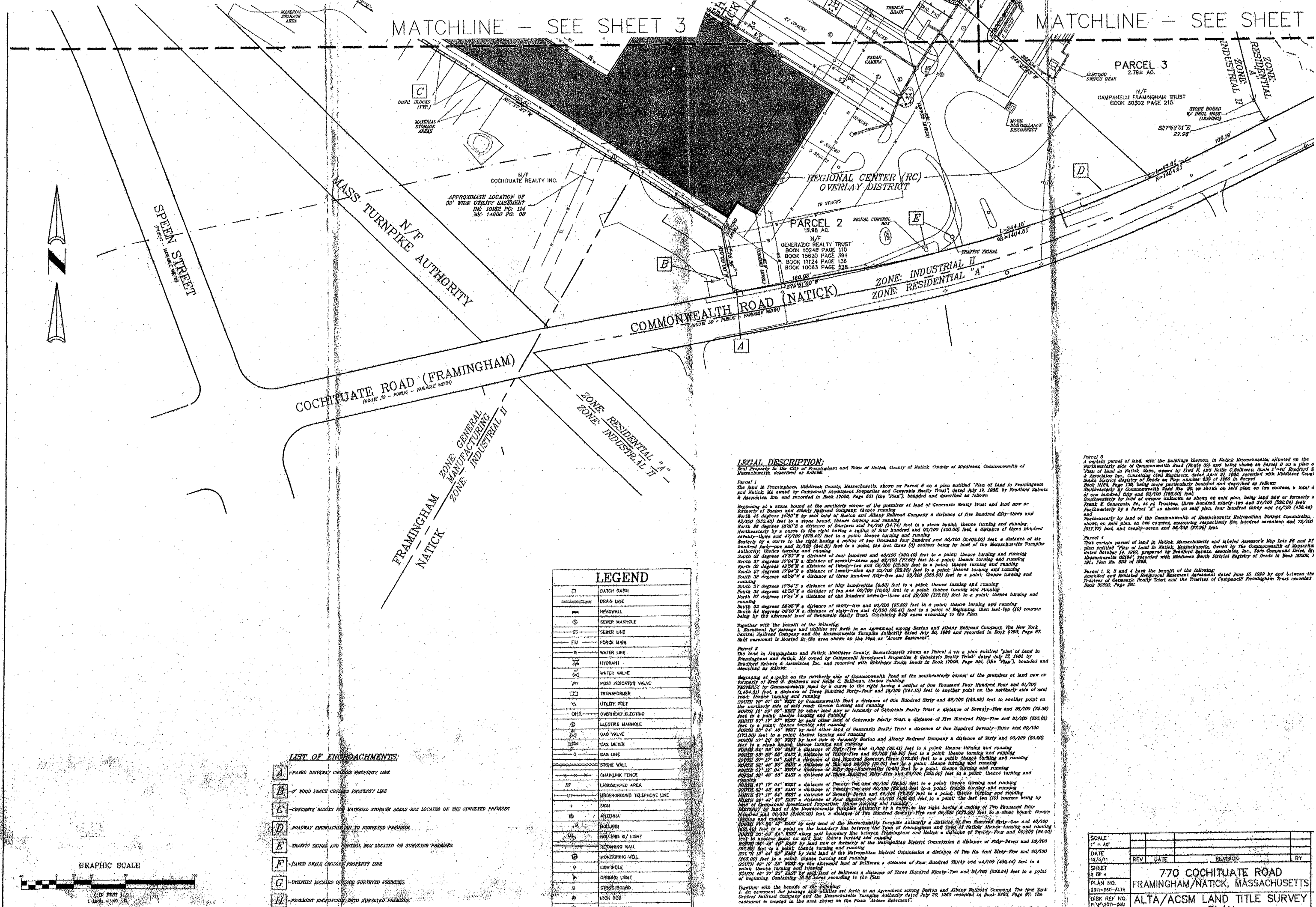

LEGAL DESCRIPTION:

Real Property In The City of Framingham and Town of Natick, County of Natick, County of Middlesex, Commonwealth of Massachusetts, described as follows:

Parcel 1
The land in Framingham, Middlesex County, Massachusetts, shown as Parcel B on a plan entitled "Plan of Land in Framingham and Natick, MA owned by Campanelli Investment Properties and Generazio Realty Trust", dated July 17, 1985, by Bradford Saivetz & Associates, Inc. and recorded in Book 17006, Page 551 (the "Plan"), bounded and described as follows:

Beginning at a stone bound at the southerly corner of the premises at land of Generazio Realty Trust and land now or formerly of Boston and Albany Railroad Company, thence running
North 45 degrees 14'00"E by said land of Boston and Albany Railroad Company a distance of five hundred fifty-three and 45/100 (553.45) feet to a stone bound, thence turning and running
North 28 degrees 15'00"E a distance of fourteen and 74/100 (14.74) feet to a stone bound, thence turning and running
Northeasterly by a curve to the right having a radius of four hundred and 00/100 (400.00) feet, a distance of three hundred seventy-three and 47/100 (373.47) feet to a point, thence turning and running
Easterly by a curve to the right having a radius of two thousand four hundred and 00/100 (2,400.00) feet, a distance of six hundred forty-one and 31/100 (641.31) feet to a point, the last three (3) courses being by land of the Massachusetts Turnpike Authority, thence turning and running
South 32 degrees 47'57"W a distance of four hundred and 40/100 (400.40) feet to a point, thence turning and running
South 57 degrees 17'04"E a distance of seventy-seven and 62/100 (77.62) feet to a point, thence turning and running
North 32 degrees 42'56"E a distance of twenty-two and 50/100 (22.50) feet to a point, thence turning and running
South 57 degrees 17'04"E a distance of twenty-nine and 25/100 (29.25) feet to a point, thence turning and running
South 32 degrees 42'56"W a distance of three hundred fifty-five and 50/100 (355.50) feet to a point, thence turning and running
South 57 degrees 17'04"E a distance of fifty hundredths (0.50) feet to a point, thence turning and running
South 32 degrees 42'56"W a distance of ten and 00/100 (10.00) feet to a point, thence turning and running
North 57 degrees 17'04"W a distance of one hundred seventy-three and 29/100 (173.29) feet to a point, thence turning and running
South 53 degrees 58'05"W a distance of thirty-five and 90/100 (35.90) feet to a point, thence turning and running
South 54 degrees 08'00"W a distance of sixty-five and 41/100 (65.41) feet to a point of Beginning, than last ten (10) courses being by the aforesaid land of Generazio Realty Trust. Containing 6.95 acres according to the Plan

Together with the benefit of the following:
1. Easement for passage and utilities set forth in an Agreement among Boston and Albany Railroad Company, The New York Central Railroad Company and the Massachusetts Turnpike Authority dated July 20, 1960 and recorded in Book 9783, Page 87. Said easement is located in the area shown on the Plan as "Access Easement".

Parcel 2
The land in Framingham and Natick Middlesex County, Massachusetts shown as Parcel A on a plan entitled "plan of Land in Framingham and Natick, MA owned by Campanelli Investment Properties & Generazio Realty Trust" dated July 17, 1985 by Bradford Saivetz & Associates, Inc. and recorded with Middlesex South Deeds in Book 17006, Page 551, (the "Plan"), bounded and described as follows:

Beginning at a point on the northerly side of Commonwealth Road at the southeasterly corner of the premises at land now or formerly of Fred H. Bellreau and Nellie C. Bellreau, thence running
WESTERLY by Commonwealth Road by a curve to the right having a radius of One Thousand Four Hundred Four and 61/100 (1,404.61) feet, a distance of Three Hundred Forty-Four and 16/100 (344.16) feet to another point on the northerly side of said road, thence turning and running
SOUTH 76° 51' 00" WEST by Commonwealth Road a distance of One Hundred Sixty and 82/100 (160.82) feet to another point on the northerly side of said road, thence turning and running
NORTH 10° 09' 00" WEST by other land now or formerly of Generazio Realty Trust a distance of Seventy-Five and 38/100 (75.38) feet to a point, thence turning and running
NORTH 57° 17' 22" WEST by said other land of Generazio Realty Trust a distance of Five Hundred Fifty-Five and 81/100 (555.81) feet to a point, thence turning and running
NORTH 03° 24' 40" WEST by said other land of Generazio Realty Trust a distance of One Hundred Seventy-Three and 69/100 (173.69) feet to a point, thence turning and running
NORTH 37° 20' 30" WEST by land now or formerly Boston and Albany Railroad Company a distance of Sixty and 00/100 (60.00) feet to a stone bound, thence turning and running
NORTH 64° 53' 00" EAST a distance of Sixty-Five and 41/100 (65.41) feet to a point, thence turning and running
NORTH 68° 52' 05" EAST a distance of Thirty-Five and 90/100 (35.90) feet to a point, thence turning and running
SOUTH 57° 17' 04" EAST a distance of One Hundred Seventy-Three (173.29) feet to a point, thence turning and running
NORTH 32° 42' 56" EAST a distance of Ten and 00/100 (10.00) feet to a point, thence turning and running
NORTH 57° 17' 04" WEST a distance of Fifty One-Hundredths (0.50) feet to a point, thence turning and running
NORTH 32° 42' 56" EAST a distance of Three Hundred Fifty-Five and 50/100 (355.50) feet to a point, thence turning and running
NORTH 57° 17' 04" WEST a distance of Twenty-Two and 50/100 (22.50) feet to a point, thence turning and running
SOUTH 32° 42' 56" EAST a distance of Twenty-Two and 50/100 (22.50) feet to a point, thence turning and running
NORTH 57° 17' 04" WEST a distance of Twenty-Seven and 62/100 (77.62) feet to a point, thence turning and running
NORTH 32° 47' 57" EAST a distance of Four Hundred and 40/100 (400.40) feet to a point, the last ten (10) courses being by land of Campanelli Investment Properties, thence turning and running
EASTERLY by land of the Massachusetts Turnpike Authority by a curve to the right having a radius of Two Thousand Four Hundred and 00/100 (2,400.00) feet, a distance of Two Hundred Seventy-Five and 00/100 (275.00) feet to a stone bound, thence turning and running
SOUTH 29° 00' 23" EAST by said land of the Massachusetts Turnpike Authority a distance of Two Hundred Sixty-One and 40/100 (261.40) feet to a point on the boundary line between the Town of Framingham and Town of Natick, thence turning and running
SOUTH 30° 00' 54" WEST along said boundary line between Framingham and Natick a distance of Twenty-Four and 50/100 (24.00) feet to another point on said line, thence turning and running
NORTH 65° 46' 45" EAST by land now or formerly of the Metropolitan District Commission a distance of Fifty-Seven and 29/100 (57.29) feet to a point, thence turning and running
SOUTH 71° 15' 41" EAST by said land of the Metropolitan District Commission a distance of Two Hundred Sixty-Five and 00/100 (265.00) feet to a point, thence turning and running
SOUTH 49° 10' 23" WEST by the aforesaid land of Bellreau a distance of Four Hundred Thirty and 44/100 (430.44) feet to a point, thence turning and running
SOUTH 40° 37' 23" EAST by said land of Bellreau a distance of Three Hundred Ninety-Two and 84/100 (392.84) feet to a point of beginning. Containing 16.98 acres according to the Plan

Together with the benefit of the following:
1. An easement for passage and utilities set forth in an Agreement among Boston and Albany Railroad Company, The New York Central Railroad Company and the Massachusetts Turnpike Authority dated July 20, 1960 recorded in Book 9783, Page 87. The easement is located in the area shown on the Plans "Access Easement".

2. An easement for water, sewer and drainage reserved in a Deed from the Trustees of Generazio Realty Trust to New England Sand & Gravel Co. Inc., dated November 8, 1962 recorded in Book 10162, Page 114 and in a Confirmatory Deed from said Trustees to New England Sand & Gravel Co. Inc., dated January 3, 1963 and recorded in Book 14600, Page 66. The easement is located in the area shown on the Plan as "30' Utility Easement".

Parcel 3
A certain parcel of land, with the buildings thereon, in Natick Massachusetts, situated on the Northwesterly side of Commonwealth Road (Route 30) and being shown as Parcel B on a plan e
"Plan of Land in Natick, Mass, owned by Fred H. and Nellie C.Bellreau, Scale 1"=40' Bradford S
& Associates Inc., Consulting Civil Engineers, dated April 21, 1960, recorded with Middlesex Coun
South District Registry of Deeds as Plan number 839 of 1966 in Record
Book 11124, Page 136, being more particularly bounded and described as follows:
Southeasterly by Commonwealth Road Rte. 30, as shown on said plan, on two courses, a total d
of one hundred fifty and 80/100 (150.00) feet
Southwesterly by land of owners unknown as shown on said plan, being land now or formerly o
Frank E. Generazio Et, al et Trustees, three hundred ninety-two and 84/100 (392.84) feet
Northwesterly by a Parcel "A" as shown on said plan, four hundred thirty and 44/100 (430.44)
and
Northeasterly by land of the Commonwealth of Massachusetts Metropolitan District Commissio
shown on said plan, on two courses, measuring respectively five hundred seventeen and 72/100
(517.72) feet, and twenty-seven and 86/100 (27.86) feet.

Parcel 4
That certain parcel of land in Natick, Massachusetts and labeled Assessor's Map lots 26 and 27
plan entitled "Plan of Land in Natick, Massachusetts, Owned by The Commonwealth of Massachu
dated October 14, 1997, prepared by Bradford Saivetz, Associates, Inc., Two Campanelli Drive, Br
Massachusetts 02184", recorded with Middlesex South District Registry of Deeds in Book 30302,
191, Plan No. 852 of 1998.

Parcel 1, 2, 3 and 4 have the benefit of the following:
Amended and Restated Reciprocal Easement Agreement dated June 15, 1999 by and between the Trustees of Generazio Realty Trust and the Trustees of Campanelli Framingham Trust recorded Book 30302, Page 251.

LEGEND

	CATCH BASIN
	DRAIN LINE
	HEADWALL
	SEWER MANHOLE
SS	SEWER LINE
FM	FORCE MAIN
W	WATER LINE
	HYDRANT
	WATER VALVE
	POST INDICATOR VALVE
	TRANSFORMER
	UTILITY POLE
OHE	OVERHEAD ELECTRIC
	ELECTRIC MANHOLE
	GAS VALVE
	GAS METER
G	GAS LINE
	STONE WALL
	CHAINLINK FENCE
LS	LANDSCAPED AREA
UT	UNDERGROUND TELEPHONE LINE
	SIGN
	ANTENNA
	BOLLARD
	BOLLARD W/ LIGHT
	RETAINING WALL
	MONITORING WELL
	LIGHTPOLE
	GROUND LIGHT
	STONE BOUND
	IRON ROD
	TRAFFIC LIGHT

LIST OF ENCROACHMENTS:

A – PAVED DRIVEWAY CROSSES PROPERTY LINE
B – 6' WOOD FENCE CROSSES PROPERTY LINE
C – CONCRETE BLOCKS FOR MATERIAL STORAGE AREAS ARE LOCATED ON THE SURVEYED PREMISES
D – ROADWAY ENCROACHES ONTO SURVEYED PREMISES
E – TRAFFIC SIGNAL AND CONTROL BOX LOCATED ON SURVEYED PREMISES
F – PAVED SWALE CROSSES PROPERTY LINE
G – UTILITIES LOCATED OUTSIDE SURVEYED PREMISES
H – PAVEMENT ENCROACHES ONTO SURVEYED PREMISES

KELLY ENGINEERING GROUP, INC. NOT RESPONSIBLE FOR CONSTRUCTION MEANS, METHODS, TECHNIQUES, OR PROCEDURES SELECTED BY THE CONTRACTOR OR FOR ANY ACTS OR OMISSIONS OF CONTRACTOR OR OTHERS ON THE SITE, OR FAILURE OF THE CONTRACTOR TO CARRY OUT THE WORK IN ACCORDANCE WITH THE CONTRACT DOCUMENTS.
THE REPORT OF KELLY ENGINEERING GROUP IS CONFIDENTIAL. THIS PLAN IS LIMITED TO THE BENEFIT OF THE LEGAL NAME PARTY HERE.

COPYRIGHT (C) by KELLY ENGINEERING GROUP, INC.
All Rights Reserved

NO PART OF THIS DOCUMENT MAY BE REPRODUCED, STORED IN A RETRIEVAL SYSTEM, OR TRANSMITTED IN ANY FORM OR BY ANY MEANS, ELECTRONIC, MECHANICAL, PHOTOCOPYING, RECORDING OR OTHERWISE, WITHOUT THE PRIOR WRITTEN PERMISSION OF KELLY ENGINEERING GROUP. ANY REPRODUCTION IN ANY DOCUMENT, REPORT, OR OTHER PUBLICATION OF KELLY ENGINEERING GROUP SHALL BOTH CITE IT AS A LIKE PROPERTY.

SCALE 1" = 40'			
DATE 11/5/11	REV	DATE	REVISION	BY
SHEET 2 OF 4	770 COCHITUATE ROAD FRAMINGHAM/NATICK, MASSACHUSETTS		
PLAN NO. 2011-060-ALTA	ALTA/ACSM LAND TITLE SURVEY PLAN		
DISK REF NO. P:\P\2011-060			
DRAWN BY JPM	KELLY ENGINEERING GROUP, INC. CIVIL ENGINEERING CONSULTANTS 0 CAMPANELLI DRIVE · BRAINTREE MA · 02184		
CHKD BY SKH			
APPD BY			

N/F
MASSACHUSETTS TURNPIKE AUTHORITY

R=2400.00'
L=641.31'

R=2400.00'
L=275.00'

R=400.00'
L=373.47'

PARCEL 1
9.06 AC.
N/F
CAMPANELLI FRAMINGHAM TRUST
BOOK 17008 PAGE 651

PARCEL 2
15.94 AC.
N/F
GENERAZIO REALTY TRUST
BOOK 10248 PAGE 110
BOOK 15620 PAGE 394
BOOK 11124 PAGE 136
BOOK 10063 PAGE 538

EXISTING BUILDING
BRICK 3 STORY
STEEL AND GLASS
FOOTPRINT AREA = 45,800 S.F.
HEIGHT = 78.5'

5 STORY CONNECTOR
FOOTPRINT AREA = 7,532 S.F.

EXISTING BUILDING
BRICK 3 STORY
STEEL AND GLASS
FOOTPRINT AREA = 45,800 S.F.
HEIGHT = 78.5'

5 STORY CONNECTOR
FOOTPRINT AREA = 7,532 S.F.

EXISTING BUILDING
BRICK 3 STORY
STEEL AND GLASS
FOOTPRINT AREA = 43,324 S.F.
HEIGHT = 78.5'

ZONE: GENERAL MANUFACTURING
ZONE: INDUSTRIAL II
FRAMINGHAM
NATICK
REGIONAL CENTER OVERLAY DISTRICT

SPEEN STREET
(PUBLIC - VARIABLE WIDTH)

N/F
MASS TURNPIKE AUTHORITY

35' WIDE RAILROAD EASEMENT
BK 10248 PG. 110

50' WIDE ACCESS EASEMENT
BK 9783 PG 592

DETENTION AREA

BASKETBALL COURT

PLAYGROUND

MATCHLINE - SEE SHEET 2

GRAPHIC SCALE
(IN FEET)
1 inch = 40 ft.

COPYRIGHT (C) by KELLY ENGINEERING GROUP, INC.
All Rights Reserved

SCALE 1" = 40'			
DATE 12/5/11	REV	DATE	REVISION
SHEET 3 OF 4			
PLAN NO. 2011-060-ALTA			
DISK REF NO. F:\P\2011-060			
DRAWN BY JPM			
CHKD BY SMH			
APPD BY			

770 COCHITUATE ROAD
FRAMINGHAM/NATICK, MASSACHUSE

ALTA/ACSM LAND TITLE SURV
PLAN

KELLY ENGINEERING GROUP, INC.
CIVIL ENGINEERING CONSULTANTS
0 CAMPANELLI DRIVE · BRAINTREE MA · 02184

SEE SHEET TWO FOR LEGEND

MATCHLINE – SEE SHEET 3

MATCHLINE – SEE SHEET 2

FRAMINGHAM
ZONE: GENERAL MANUFACTURING
ZONE: INDUSTRIAL II
NATICK

MASSACHUSETTS TURNPIKE
(1955 LAYOUT – ORDER OF TAKING NO. 35 – VARIABLE WIDTH)

N30°02'54"E 24.00'
N85°46'40"E 143.62'
57.29'
85.23'
OUTFALL
DETENTION AREA
HEADWALL
WETLAND
OUTFALL
S70°26'47"E 1100.00'
WETLAND
WETLAND LINE FLAGGED BY ECOTEC, INC. ON NOV. 30th AND DEC. 2, 2011.
APPROX. WETLAND LINE AS SHOWN ON PLANS BY BRADFORD SAIVETZ & ASSOCIATES, INC., DATED 9/1/1997
H
WETLAND LINE FLAGGED BY ECOTEC, INC. ON NOV. 30th AND DEC. 2, 2011.
WETLAND
WETLAND
WETLAND
N/F MASSACHUSETTS TURNPIKE AUTHORITY
266.00'
CONSTRUCTION DEBRIS
WATER TANK 40.0'
MAINTENANCE BUILDING 41.0'
TRANSFORMER
IRON ROD FOUND
TRENCH DRAIN
20' WIDE SLOPE EASEMENT PLAN #838 OF 1986 BK 11124 PG: 136
STONE SLOPE
N32°44'00"W 782.72'
PARCEL 4
11.21± AC.
N/F
CAMPANELLI FRAMINGHAM TRUST
BOOK 30302 PAGE 192
817.66'
S67°05'35"W
COMMONWEALTH ROAD (NATICK)
(ROUTE 30 – PUBLIC – VARIABLE WIDTH)
RETAINING WALL WITH GUARD RAIL
PARCEL 3
2.78± AC.
N/F
CAMPANELLI FRAMINGHAM TRUST
BOOK 30302 PAGE 215
ROOF DRAIN
LANDSCAPE WALL
CONC. WALL
REGIONAL CENTER (RC) OVERLAY DISTRICT
ZONE: INDUSTRIAL II
ZONE: RESIDENTIAL "A"
517.72'
WETLAND
WETLAND
RETAINING WALL WITH FENCE
ELECTRIC SWITCH GEAR
364.13'
S64°01'25"W 470.32'
HYDRANT
GRAPHIC SCALE
1 inch = 40 ft.

SEE SHEET TWO FOR LEGEND

SCALE 1" = 40'			
DATE 12/5/11	REV	DATE	REVISION
SHEET 4 OF 4			
PLAN NO. 2011-060-ALTA			
DISK REF NO. F:\P\2011-060			
DRAWN BY JPM			
CHKD BY SMH			
APPD BY SMH			

770 COCHITUATE ROAD
FRAMINGHAM/NATICK, MASSACHUSETT

ALTA/ACSM LAND TITLE SURVE
PLAN

KELLY ENGINEERING GROUP, INC.
CIVIL ENGINEERING CONSULTANTS
0 CAMPANELLI DRIVE · BRAINTREE MA · 02184
PHONE: 781 843 4333 FAX: 781 843 0028

KELLY ENGINEERING GROUP SHALL NOT BE RESPONSIBLE FOR CONSTRUCTION MEANS, METHODS, TECHNIQUES, OR PROCEDURES UTILIZED BY THE CONTRACTOR, NOR FOR THE SAFETY OF PERSONS OTHER THAN THOSE OF KELLY ENGINEERING GROUP'S EMPLOYEES, OR FOR THE FAILURE OF THE CONTRACTOR TO CARRY OUT THE WORK IN ACCORDANCE WITH THE CONTRACT DOCUMENTS.
THE PURPOSE OF KELLY ENGINEERING GROUP'S LIABILITY FOR THIS PLAN IS LIMITED TO THE AMOUNT OF FEE THIS USER PAID PARTY DOES

COPYRIGHT (C) by KELLY ENGINEERING GROUP, INC.
All Rights Reserved

NO PART OF THIS DOCUMENT MAY BE REPRODUCED, STORED IN A RETRIEVAL SYSTEM, OR TRANSMITTED IN ANY FORM OR BY ANY MEANS, ELECTRONIC, MECHANICAL, PHOTOCOPYING, RECORDING OR OTHERWISE, WITHOUT THE PRIOR WRITTEN PERMISSION OF KELLY ENGINEERING GROUP. ANY REPRODUCTION OF THE DOCUMENT WITHOUT THE WRITTEN PERMISSION OF KELLY ENGINEERING GROUP SHALL RESULT IN LEGAL ACTION.

incorporated 2013

CLERK OF THIS TOWN HAS RECEIVED NOTICE OF
APPROVAL FROM THE PLANNING BOARD OF THIS PLAN
ON _____ AND NO APPEAL WAS TAKEN
FOR TWENTY (20) DAYS THEREAFTER. SAID TWENTY (20) DAY
APPEAL PERIOD ENDED ON _____

FRAMINGHAM PLANNING BOARD
SITE PLAN REVIEW

_____

_____

_____

_____

_____

_____

_____

_____

DATE: _____

THIS DOCUMENT OF THE PLANNING BOARD SHOULD BE CONSTRUED TO BE DETERMINATION OF CONFORMANCE WITH ZONING REGULATIONS.

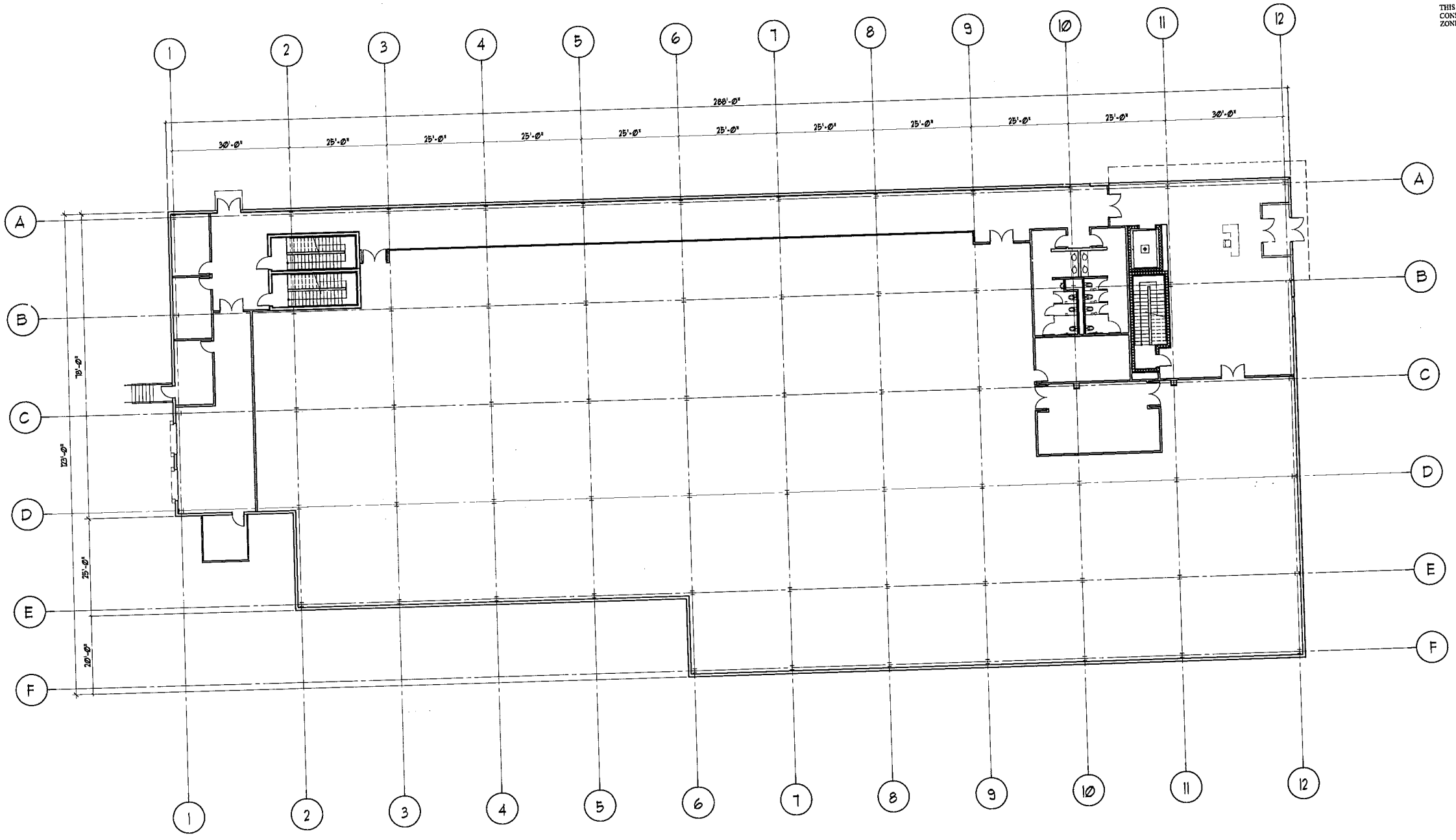

FIRST FLOOR PLAN
SCALE: 1/16" = 1'-0"

SEAL

This drawin
of service,
used only
signed, sea
expressed
Copyright &

PDA Inc. a
means, me
by the co
contra...on
contractor
with the c

PLA
16
TEL:

CLERK OF THE TOWN OF FRAMINGHAM, RECEIVED AND RECORDED APPROVAL FROM THE PLANNING BOARD OF THIS PLAN ON _____ AND NO APPEAL WAS TAKEN FOR TWENTY (20) DAYS THEREAFTER. SAID TWENTY (20) DAY APPEAL PERIOD ENDED ON _____

FRAMINGHAM PLANNING BOARD
SITE PLAN REVIEW

_____

_____

_____

_____

_____

_____

_____

DATE: _____

THIS DOCUMENT OF THE PLANNING BOARD SHOULD BE CONSTRUED TO BE DETERMINATION OF CONFORMANCE WITH ZONING REGULATIONS.

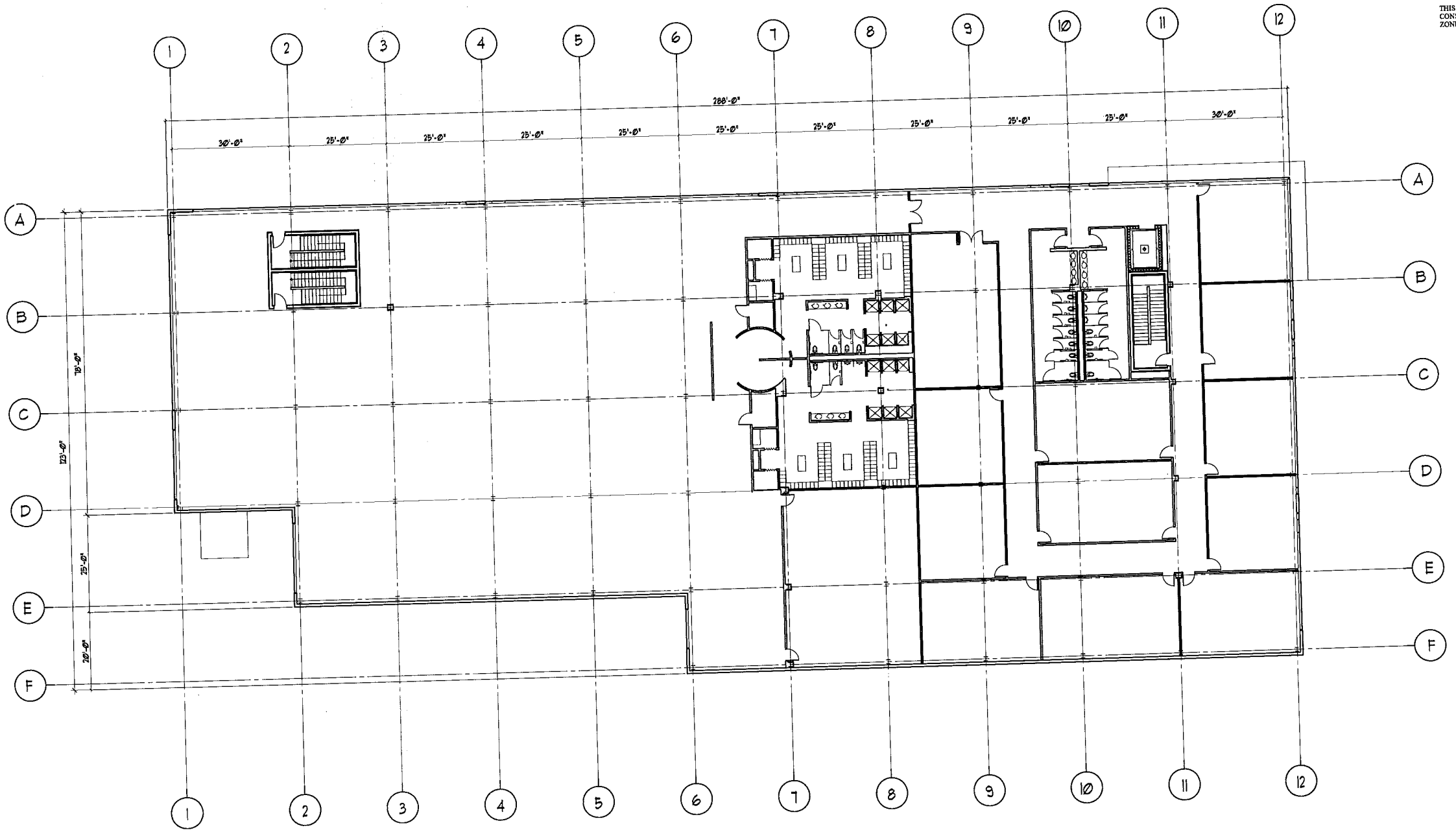

SECOND FLOOR PLAN
SCALE: 1/16" = 1'-0"

SEAL

This drawi
of service.
used only
licensed, or
expressed
Copyright

POA Inc.
means, m
by the co
contractor
contractor
with the

PLA
16
TEL

S

Incorporated 2013

I,_____
CLERK OF THE TOWN OF FRAMINGHAM, RECEIVED AND RECORDED APPROVAL FROM THE PLANNING BOARD OF THIS PLAN ON_____ AND NO APPEAL WAS TAKEN FOR TWENTY (20) DAYS THEREAFTER. SAID TWENTY (20) DAY APPEAL PERIOD ENDED ON _____

FRAMINGHAM PLANNING BOARD
SITE PLAN REVIEW

_____
_____
_____
_____
_____
_____
_____
_____

DATE:

THIS DOCUMENT OF THE PLANNING BOARD SHOULD BE CONSTRUED TO BE DETERMINATION OF CONFORMANCE WITH ZONING REGULATIONS.

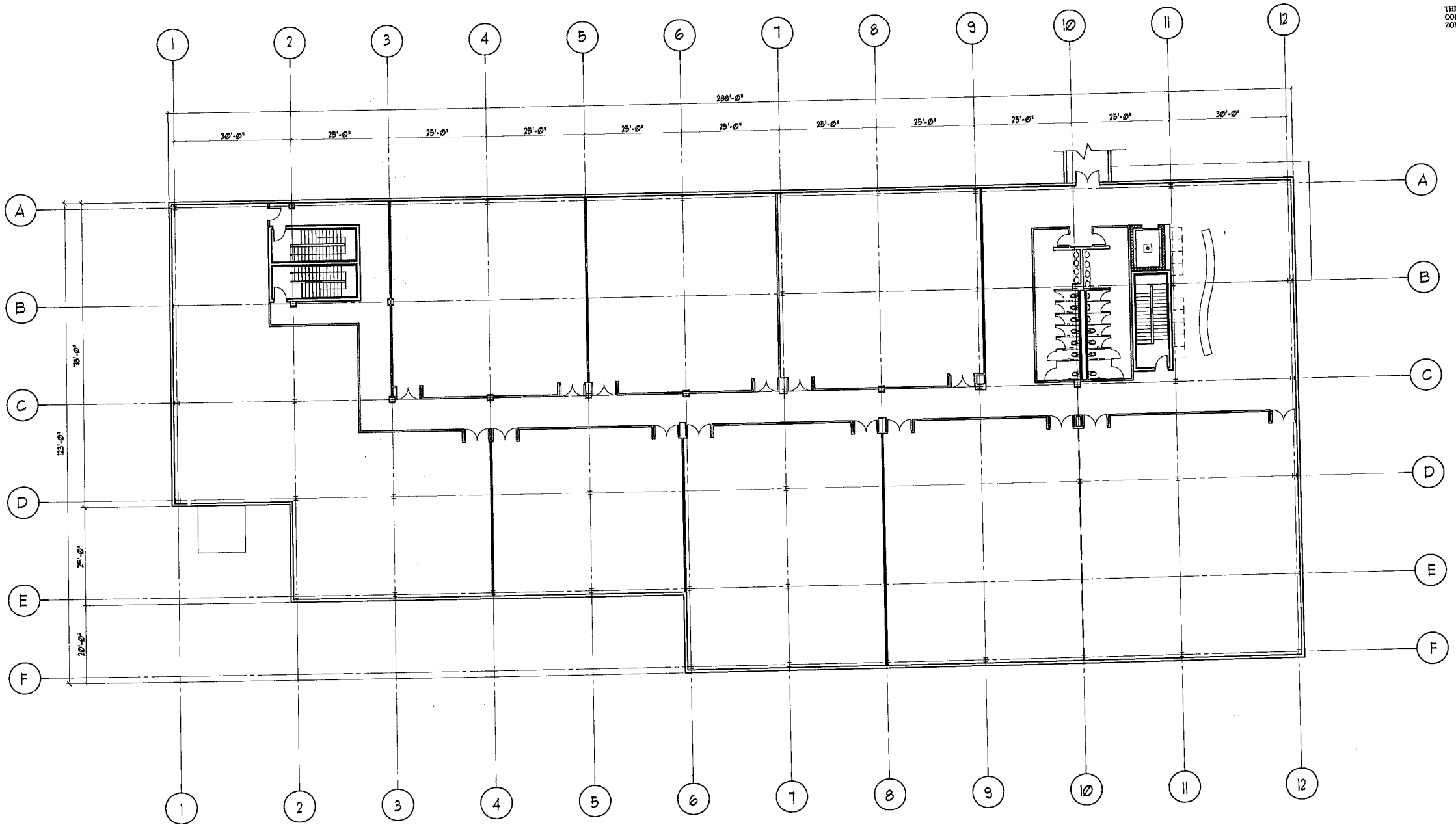

THIRD FLOOR PLAN
SCALE: 1/16" = 1'-0"

SEAL

This drawing is the property of service and may not be used only for the project for which it was prepared and loaned, or copied in whole or in part without the written expression of PDA Inc. Copyright.

PDA Inc. makes no representations or warranties of any kind, express or implied, except as may be specifically agreed to by the contract between PDA Inc. and its client. Any other contracts or agreements shall be subject to separate contracts with the client.

PLAN
16
TEL.

CLERK OF THE TOWN OF FRAMINGHAM, RECEIVED AND RECORDED APPROVAL FROM THE PLANNING BOARD OF THIS PLAN ON _____ AND NO APPEAL WAS TAKEN FOR TWENTY (20) DAYS THEREAFTER. SAID TWENTY (20) DAY APPEAL PERIOD ENDED ON _____

FRAMINGHAM PLANNING BOARD
SITE PLAN REVIEW

_____

_____

_____

_____

_____

_____

_____

DATE: _____

THIS DOCUMENT OF THE PLANNING BOARD SHOULD BE CONSTRUED TO BE DETERMINATION OF CONFORMANCE WITH ZONING REGULATIONS.

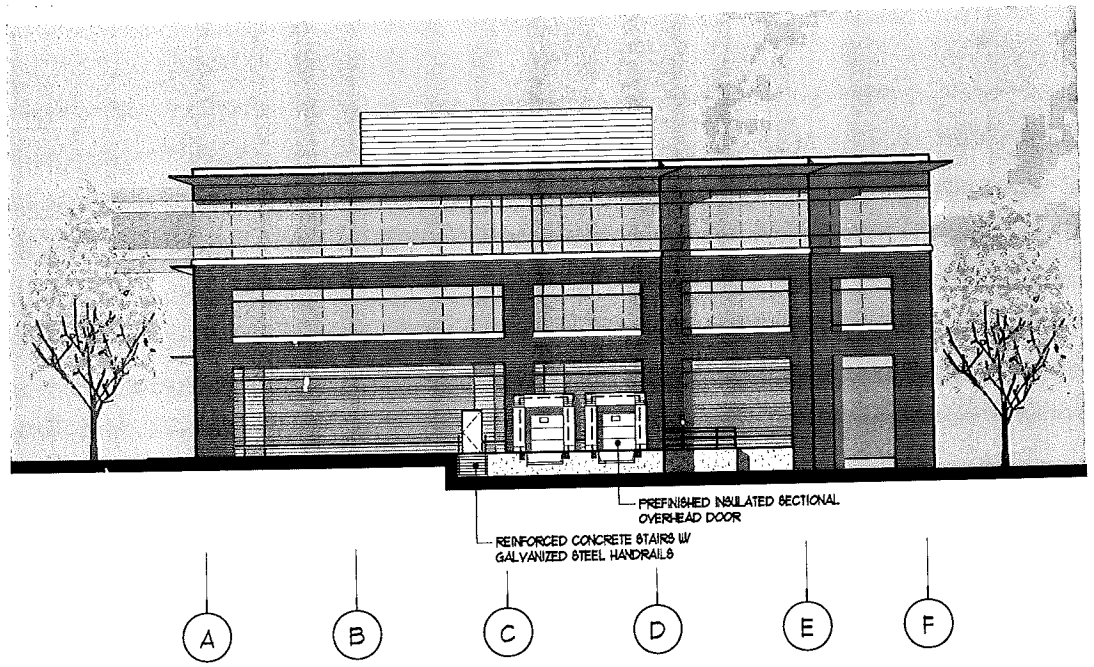

WEST ELEVATION
SCALE: 1/16" = 1'-0"

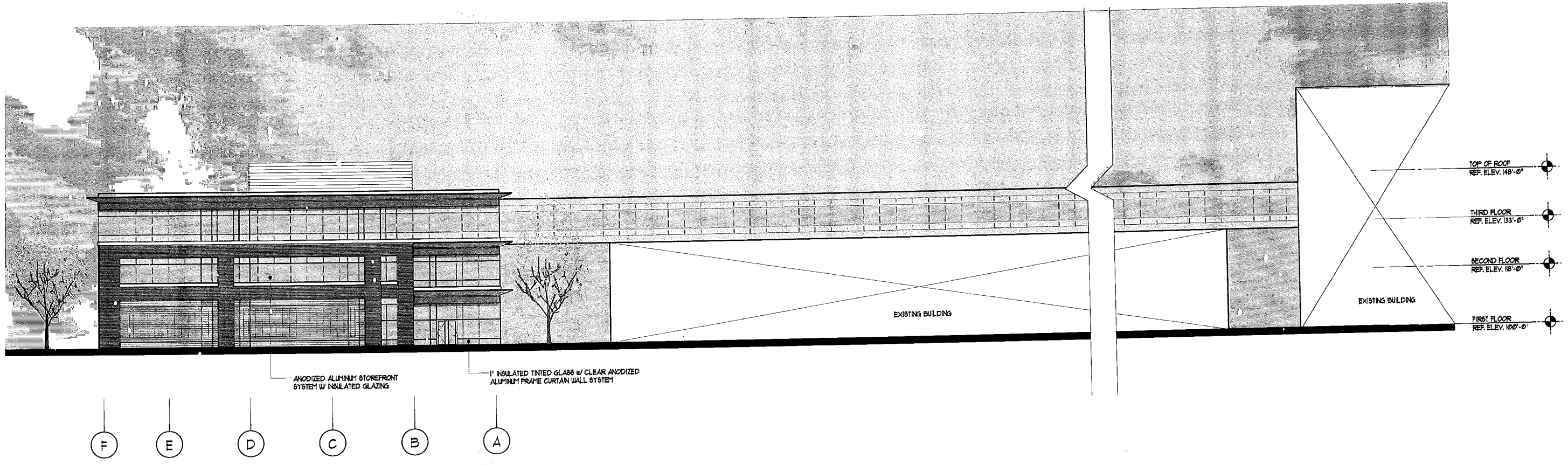

EAST ELEVATION
SCALE: 1/16" = 1'-0"

SEAL

This draw
of service
used only
loaned, c
expressed
Copyright

POA Inc.
means, r
by the c
contracto
contracts
with the

PLAN
16 I
TEL.

CLERK OF THE TOWN OF FRAMINGHAM, RECEIVED AND RECORDED APPROVAL FROM THE PLANNING BOARD OF THIS PLAN ON _____ AND NO APPEAL WAS TAKEN FOR TWENTY (20) DAYS THEREAFTER. SAID TWENTY (20) DAY APPEAL PERIOD ENDED ON _____

FRAMINGHAM PLANNING BOARD
SITE PLAN REVIEW

DATE:

THIS DOCUMENT OF THE PLANNING BOARD SHOULD BE CONSTRUED TO BE DETERMINATION OF CONFORMANCE WITH ZONING REGULATIONS.

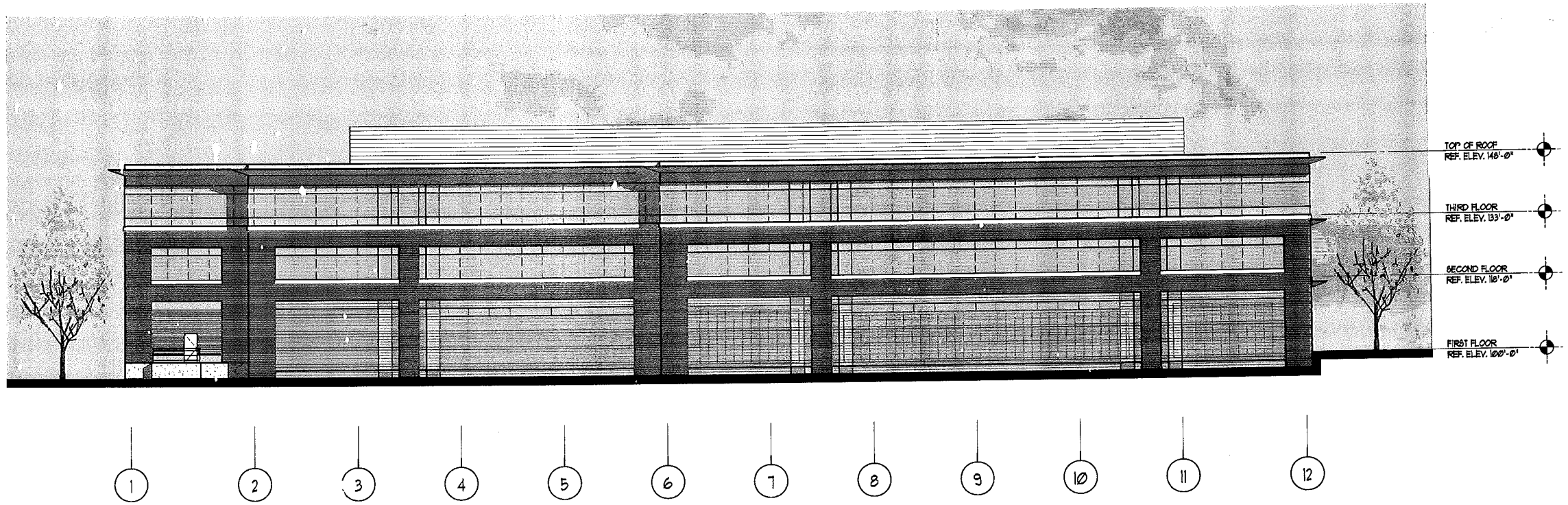

SOUTH ELEVATION
SCALE: 1/16" = 1'-0"

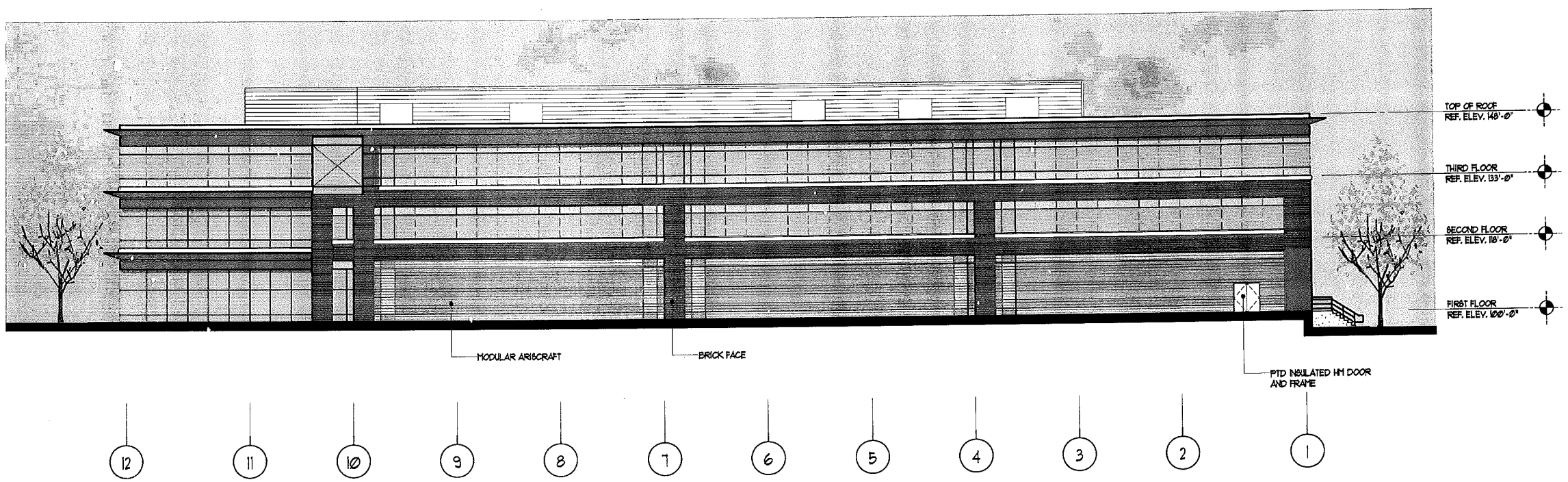

NORTH ELEVATION
SCALE: 1/16" = 1'-0"

SEAL

This drawing of service used only licensed, expressed Copyright

PDA Inc. means, by the contracts contracts with the

TIV CORPORATE

PLANN
16 HI
TEL: 5

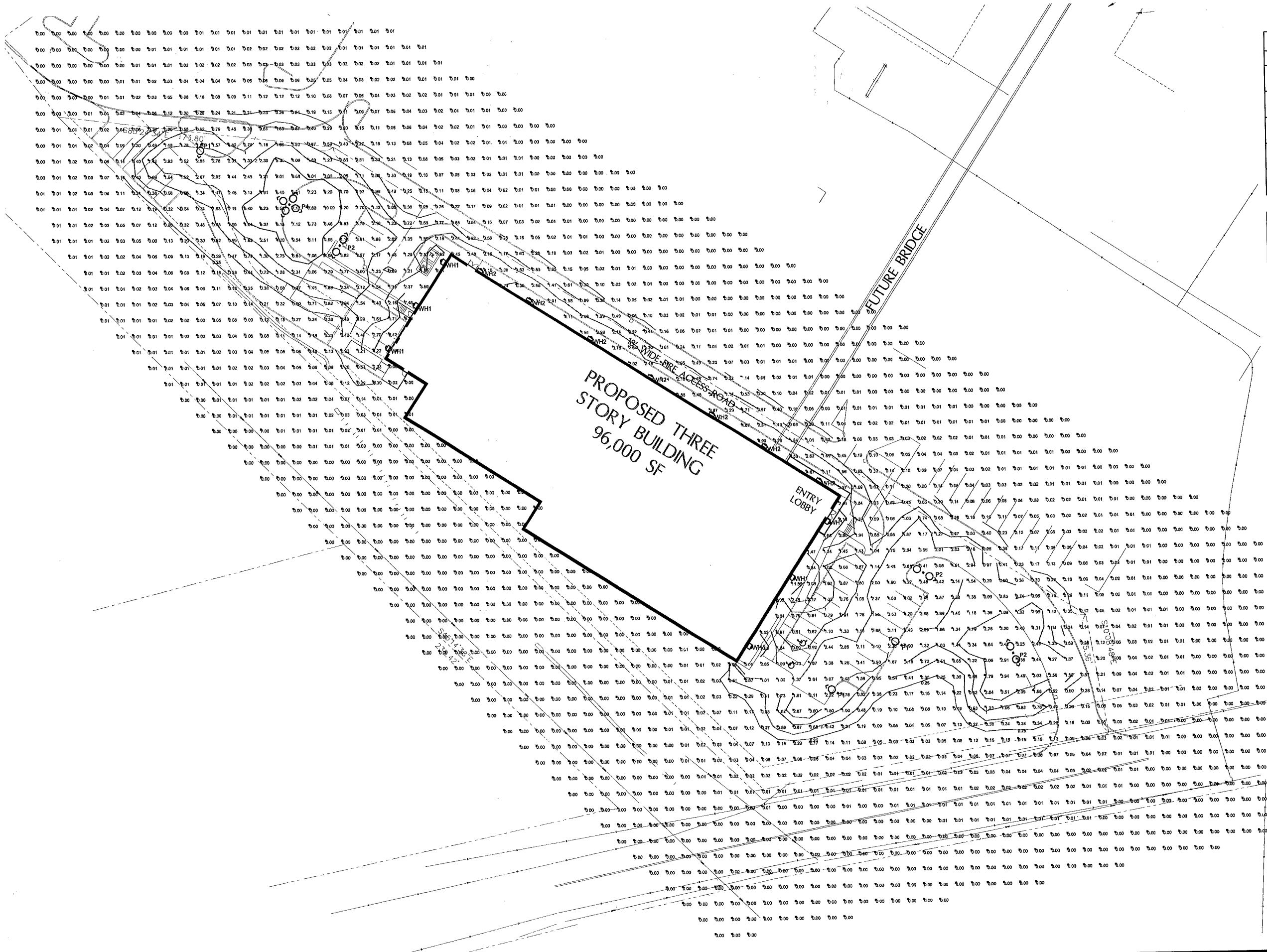

LUMINAIRE SCHEDULE

Symbol	Label	Qty	Catalog Number	Description	Lamp
	P1	3	PAPPI #AU3 78 LED III 120-277 LG	POLE MOUNTED LED TYPE III AREA LIGHT (SINGLE MOUNT) 20'-0" POLE	LED
	P2	3	PAPPI #AU3 78 LED III 120-277 LG	POLE MOUNTED LED TYPE III AREA LIGHT (DUAL MOUNT) 20'-0" POLE	LED
	P4	1	PAPPI #AU3 78 LED III 120-277 LG	POLE MOUNTED LED TYPE III AREA LIGHT (QUAD MOUNT) 20'-0" POLE	LED
	WH1	8	PAPPI #WBFC175MH	HID WALL PACK (15'-0")	(1) 175W MH
	WH2	7	LIGHTWAY #BDTW 100M WT	HID WALL PACK (15'-0")	(1) 100W MH

STATISTICS

Description	Symbol	Avg	Max	Min
PARKING & DRIVES	+	2.30 fc	11.94 fc	0.00 fc
OVERFLOW	×	0.11 fc	5.06 fc	0.00 fc

I,
CLERK OF THE TOWN OF FRAMINGHAM, RE
APPROVAL FROM THE PLANNING BOARD O
ON AN
FOR TWENTY (20) DAYS THEREAFTER. SAI
APPEAL PERIOD ENDED ON

FRAMINGHAM PLANN
SITE PLAN REVIEW

DATE:

THIS DOCUMENT OF THE PLANNING BOAR
CONSTRUED TO BE DETERMINATION OF C
ZONING REGULATIONS.

REVISION
REV.1 DA

DRAW
CHEC
SCAL
DATE

CLIE
PD
16 HU
NATI

PRO
TJM
CRE
740 C
NATI

DRA
PH
SITE

LED High Performance
Dark Skies Compliant
Pole Mounted Luminaire

Auraform 3

Specifications

Housing
Rugged anodizing quality extruded 6063 T6 aluminum Min 0.100" (2mm) to a max of 0.470" (10mm) incorporating precision, internally welded with clamp joint construction.

Lens / Frame
6063 T6 clear extruded aluminum. Servicing is made easy with an invisible self hinged design incorporating spring loaded tool-less latches. Flat UV protected acrylic lens is standard. When glare-control is required an optional semi-transparent acrylic is available

Finish
Rugged, long life, oven baked polyester powder coatings utilizing multi-stage pre-treatment for outstanding adhesion. Optional Hard color anodizing provides a superior protection in harsh and corrosive applications.

Warranty
LED Luminaires are warranted against defects in material and workmanship for three years. LED modules and drivers are warranted for a period of (5) five years.
(See Detailed Limited Warranty for more information)

Electrical
Advance constant current electronic drivers multi voltage meets UL 1310 / UL48 Class 2 with a built-in over-temperature protection. Input voltage from 100-277 VAC 50-60Hz.
Also available in 347volt.

Lamping
All light emitting diodes (LED) modular panels are manufactured by Philips Lumileds with a standard 6500k color temperature. Other color temperatures are available consult factory for more information. LED's are Mounted on heavy weight white circuit board with an Extended aluminum heat-sink for optimal cooling. LEDs utilize a variety of high efficient projection lenses to provide wide and uniform lighting distributions.

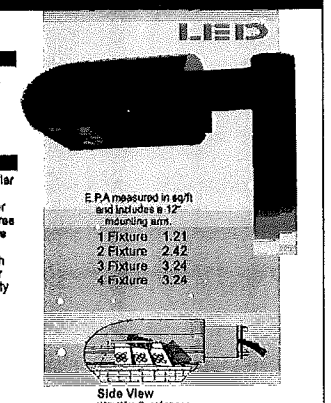

Side View
With Wire Guard shown.

Front View
With Wire Guard shown.

AU3

Lamp Voltage Distribution
- 58 watt LED Type 2 dist (58 LED II) - 5814Lms
- 58 watt LED Type 3 dist (58 LED III) - 5914Lms
- 60 watt LED Type 4 dist (60 LED FF) - 6738 Lms
- 72 watt LED Type 5 dist (72 LED V) - 7515 Lms
- 78 watt LED Type 2 dist (78 LED II) - 7498 Lms
- 78 watt LED Type 3 dist (78 LED III) - 7498 Lms
- 80 watt LED Type 4 dist (80 LED FF) - 7252 Lms

Voltage
- 120-277, 347

Lens
- Flat Acrylic (LA)
- Frosted Acrylic (FG)

Mounting
- Pole Mount (PM)
- Wall Mount (WM)
- Single Slipfitter (FT1)
- Twin Slipfitter @ 90 (FT2-90)
- Twin Slipfitter @ 180 (FT2-180)
- Triple Slipfitter (FT3)
- Quad Slipfitter (FT4)

Options
- 4" Pole Mount Arm (A34)
- 6" Pole Mount Arm (A36)
- 12" Pole Mount Arm (A312)
- Wire Guard (WG)
- Photo Control (PC)
- Fuse(s) (F)

Color / Finish
- Powder Coating: White (WHI), Black (MBK), Bronze (BZB), Special (SPC)
- Anodizing: Clear (CLA), Black (MBA), Bronze (BZA)

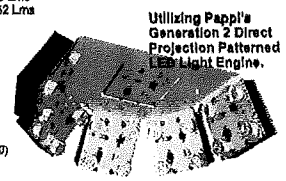

Utilizing Pappi's Generation 2 Direct Projection Patterned LED Light Engine.

- Saves up to 80% of energy consumption
- 70,000-100,000 hour lifespan
- Does not produce UV rays
- Full cutoff/Dark Sky-compliant; helps minimize light trespass

Listed for Wet Location

RoHS COMPLIANT

Pappi Lighting

Wallbright FC

175 watt Full Cut-Off
Wall Mount Luminaire

Housing
Die cast aluminum ½" NPS tapped holes on top, sides and a drilling template for easy box mounting. Hinged refractor door frame for simple lamp servicing. Continuous silicone rubber gasket.

Reflector
Specular anodized hamertone aluminum, removable for installation. Symmetrical light pattern maximizes distance between luminaires.

Lens / Frame
Impact and thermal-shock resistant tempered safety glass lens encased with heavy silicone gasketing. Die cast aluminum door frame hinged on one side and held captive with 2 stainless steel fasteners.

Electrical
High power factor ballasts rated to -30 Deg C (-20 Deg F). 4 KV rated mogul base lamp holders with nickel plated screw shell and spring loaded center contact.

Finish
Rugged, long life, oven baked polyester powder coatings utilizing multi-stage pre-treatment for outstanding adhesion. Standard finish is bronze and white. Custom colors are available
- consult factory -

Lamping
Horizontal burn position and medium base for all reflector types.

175w - 70MH Medium Base E-17
150w - 50 HPS Medium Base E-17

Warranty
A three year warranty against defects in material and workmanship. Lamp and ballast and ballast components warranties are provided by manufacturer. All warranties are limited to replacement and/or repair.

Listed for Wet Location

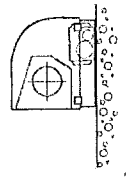

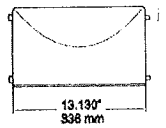

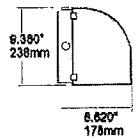

WBFC

Lamp
- 175mh 150hps
- 150mh, 100hps
- 100mh 70hps
- 70mh

Voltage
- 120, 208, 240, 277, 347.

Color / Finish
- Powder coat White (WHI) Bronze (BZB) Special (SPC)

ISO-ILLUMINANCE DIAGRAM (fc)

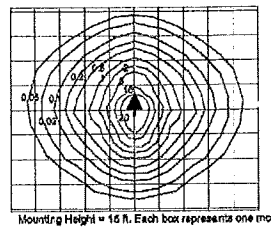

Mounting Height	Multiplier
10	2.250
15	1.00
20	0.563
25	0.36
30	0.25
35	0.18
40	0.14
45	0.11
50	0.09

Mounting Height = 15 ft. Each box represents one mounting height.

Lamp : 175w
Lumens: 14000
Tilt = none

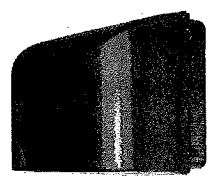

Pappi Lighting
www.pappilighting.com
Tel: 888-453-1139 Fax: 866-720-3015

BDTW

Construction:
- Cast aluminum housing
- Aluminum reflector
- Clear tempered glass lens

Lamps:
- Lamps **INCLUDED**

Notes:
- Wall mounting bracket attaches to 4" recessed outlet box
- Pulse start magnetic ballast and lamp with (MH)
- Photocell – option 21 (specify voltage)
- MR lamp comes with 12' of wire (12v transformer by others)
- Battery backup with (1) Q26/1T32/1T42 lamp only
- Dark Sky compliant
- UL and CUL listed WET location

Type:
Job Name:

WALL | CEILING | PENDANT | OUTDOOR

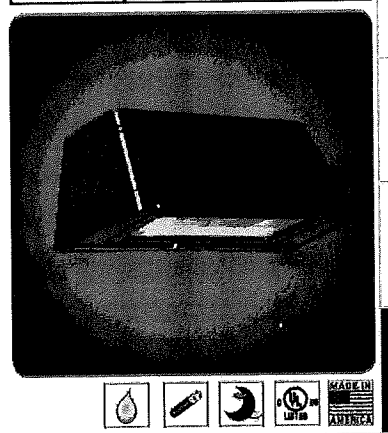

BDGW-7
Height - 7 ¼"
Width - 18"
Depth - 9"

MADE IN AMERICA

ORDERING INFORMATION

Example: BDTW-7-7-1M150-T-Z99-CEG-T3

Model	Cage	Voltage	Lamping	Kelvin	Finish	Diffuser	Options
BDTW-7		A 120v HPF (Elec) U 277v HPF (Elec) 7 Quad-tap (Mag)	1Q26 (1) Q26w 2Q26 (2) Q26w 1T32 (1) T32w 2T32 (2) T32w 1T42 (1) T42w 1M70 (1) 70w MH Mag 1M100 (1) 100w MH Mag 1M150 (1) 150w MH Mag	2 2700K 3 3500K 4 4100K T (MH)	299 Bronze Optional (See Price List) W1 Yolk W2 Gloss White W3 Text White B1 Satin Black B2 Text Black T4 Shimmer Gray M13 Anod Silver T6 Pewter W13 Pearl Beige	CEG Clear Tempered Glass Light Pattern T3 Type III T4 Type IV	14 Quartz Restrike 21 Photocell - Specify Voltage MR 20w, MR16 Lamp (BB option - See Notes) BB - Battery Backup CBB - Cold Weather BB 01 120v 02 277v 06 650 Lumen (nominal) 12 1250 Lumen (nominal)

28435 Industry Drive, Valencia, California 91355
West Coast Sales: 800-323-4448 / 661-257-0285 • Fax 800-323-3346 / 661-257-0291
East Coast Sales: 866-350-0991 • Fax 866-490-5754
www.lightwayled.com • sales@lightwayled.com

Lightway

Pole Mount

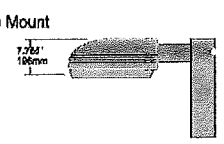

Drilling Details

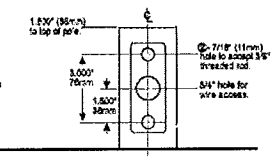

Slipfitter Mount

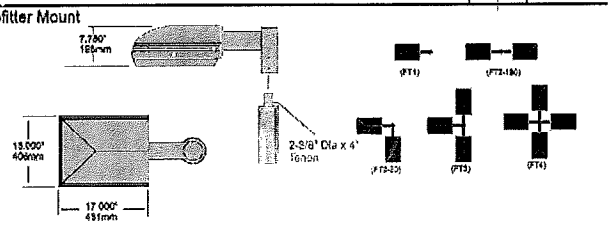

Wall Mount

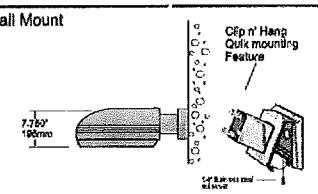

Drilling Details

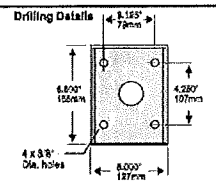

Photometrics

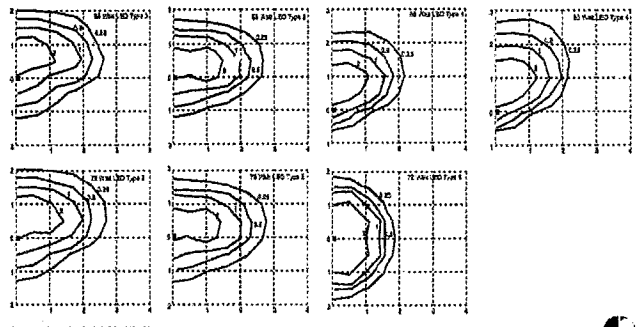

Mounting height Multiplier.

Height	8'	16'	18'	20'	24'	28'	30'
Multiplier	3.81	1.77	1.23	1	0.69	0.51	0.44

*Tested Mounting Height = 20 ft.
Each box represents one mounting height.
Initial test data shown.*

Pappi Lighting
World Class Luminaires and Poles

REVISION
REV. | D

I, _____
CLERK OF THE TOWN OF FRAMINGHAM, RE
APPROVAL FROM THE PLANNING BOARD OF
ON _____ AND
FOR TWENTY (20) DAYS THEREAFTER. SAID
APPEAL PERIOD ENDED ON _____

FRAMINGHAM PLANNI
SITE PLAN REVIEW

DATE:

THIS DOCUMENT OF THE PLANNING BOARD
CONSTRUED TO BE DETERMINATION OF CO
ZONING REGULATIONS.

DRAW
CHEC
SCALE
DATE

CLIEN
PDA
16 HUB
NATIC

PROJE
TJX
CEN
740 CO
NATIC

DRAW
PH
FIXTU