Site Plans

Issued for:	**Local Approvals**
Date Issued:	November 12, 2012
Latest Issue:	May 14, 2013

Sheet Index

Number	Drawing Title	Latest Issue
C-1	Legend and General Notes	4/16/2013
C-2	Open Space Plan	5/14/2013
C-3.1 - 3.4	Layout and Materials Plan	5/14/2013
C-4.1 - 4.4	Grading, Drainage, and Erosion Control Plan	5/14/2013
C-5.1 - 5.4	Utility Plan	5/14/2013
C-6.1 - 6.3	Road Profiles	5/14/2013
C-7.1 - 7.6	Site Details	5/14/2013
RG-1 - 4	Rain Garden Planting Plan	5/14/2013

Reference Drawings

Number	Drawing Title	Latest Issue
SV-1 - 9	Existing Conditions Plan of Land	11/8/2012
13 of 21	Alignment Plans - Old Connecticut Path at Riverpath Drive	
L1.0	Site Landscape Reference Plan	4/16/2013
L1.1	Common Area Planting Plan & Plant List	4/16/2013
L1.2	Common Area Planting Plan	4/16/2013
L1.3	Common Area Planting Plan	4/16/2013
L1.4	Common Area Entrance Planting Plan	4/16/2013
L2.1	Typical Buildings 100 & 200 Planting Plans	4/16/2013
L2.2	Typical Buildings 201, 204 & 209 Planting Plans	4/16/2013
L2.3	Typical Cottage Planting Plans	4/16/2013
L2.4	Typical Townhouse Planting Plans	4/16/2013
L3.1	Amenity Area Landscape Plan	4/16/2013
L4.1	Site Lighting Plan	4/16/2013
L5.1	Planting Details	4/16/2013
L5.2	Planting Notes	4/16/2013
SKL1	Typical Condenser Unit & Transformer Planting	4/16/2013

PLAN INTENT:
THIS PLAN DEPICTS THE PROJECT AT A LEVEL OF DETAIL SUFFICIENT TO MEET THE REQUIREMENTS OF PERMITTING BUT IS NOT INTENDED TO INCLUDE DETAILS SUFFICIENT FOR CONSTRUCTION.

Danforth Green

Riverpath Drive
Framingham, MA

Site Location Map

Property Owners

Owner/Applicant:
Danforth Green, LLC
21 Center Street
Weston, MA 02493
(781) 894-9898

Assessor's Parcel Information

Map - Block - Lot #
292.0 - 0183 - 0006.A
293.0 - 0184 - 0001.0
293.0 - 0184 - 0003.0
293.0 - 0184 - 0005.0
301.0 - 0208 - 0001.D
301.0 - 0208 - 0019.A
301.0 - 0208 - 0021.0
302.0 - 0211 - 0001.0
302.0 - 0211 - 0004.0
302.0 - 0211 - 0007.0
Land of MWRA

Vanasse Hangen Brustlin, Inc.
Transportation
Land Development
Environmental Services

Union Station, Suite 219
2 Washington Square
Worcester, Massachusetts 01604
508.752.1001 • FAX 508.752.1276

Civil Engineer:
Vanasse Hangen Brustlin, Inc.
Union Station, Suite 219
2 Washington Square
Worcester, MA 01604
(508) 752-1001

Environmental Scientist/Surveyor:
Vanasse Hangen Brustlin, Inc.
101 Walnut Street
Watertown, MA 02471
(617) 924-1770

Geotechnical Engineer:
McGardle Gannon Associates, Inc.
1125 Main Street
Hanover, MA 02339
(781) 982-2881

Architect:
Interactive Building Group, Inc.
60 Ledgewood Drive
Rockland, MA 02370

Landscape Architect:
Hawk Design Inc.
P.O. Box 1309
Sandwich, MA 02563
(508) 833-8800

Architect:
Union Studio
140 Union Street
Providence, RI 02903
(401) 272-4724

Architect:
Niles Bolton Associates
3060 Peachtree Road NW, Suite 600
Atlanta, GA 30305
(404) 365-7600

Architect:
Raymond Design Associates, Inc.
60 Ledgewood Place
Rockland, MA 02370
(781) 421-3480

VHB Project No. 12004.00
Riverpath Drive, Framingham, MA
Issued for: Local Approvals

Saved Friday, April 12, 2013 8:52:35 AM BGESNER Plotted Tuesday, May 14, 2013 1:42:37 PM Gesner, Brittany

Legend

Exist.	Prop.	
		PROPERTY LINE
		PROJECT LIMIT LINE
		RIGHT-OF-WAY/PROPERTY LINE
		EASEMENT
		BUILDING SETBACK
		PARKING SETBACK
10+00	10+00	BASELINE
		CONSTRUCTION LAYOUT
		ZONING LINE
		TOWN LINE
		LIMIT OF DISTURBANCE
		WETLAND LINE WITH FLAG
		FLOODPLAIN
BLSF		BORDERING LAND SUBJECT TO FLOODING
BZ		WETLAND BUFFER ZONE
NDZ		NO DISTURB ZONE
200'RA		200' RIVERFRONT AREA
		GRAVEL ROAD
EOP		EDGE OF PAVEMENT
BB	BB	BITUMINOUS BERM
BC	BC	BITUMINOUS CURB
CC	CC	CONCRETE CURB
	CG	CURB AND GUTTER
CC	ECC	EXTRUDED CONCRETE CURB
CC	MCC	MONOLITHIC CONCRETE CURB
CC	PCC	PRECAST CONC. CURB
SGE	SGE	SLOPED GRAN. EDGING
VGC	VGC	VERT. GRAN. CURB
		LIMIT OF CURB TYPE
		SAWCUT
		BUILDING
	EN	BUILDING ENTRANCE
	LD	LOADING DOCK
		BOLLARD
D	D	DUMPSTER PAD
		SIGN
		DOUBLE SIGN
		STEEL GUARDRAIL
		WOOD GUARDRAIL
		PATH
		TREE LINE
		WIRE FENCE
		FENCE
		STOCKADE FENCE
		STONE WALL
		RETAINING WALL
		STREAM / POND / WATER COURSE
		DETENTION BASIN
		HAY BALES
		SILT FENCE
4	4	MINOR CONTOUR
20	20	MAJOR CONTOUR
10	10	PARKING COUNT
	C10	COMPACT PARKING STALLS
DYL	DYL	DOUBLE YELLOW LINE
SL	SL	STOP LINE
		CROSSWALK
		ACCESSIBLE CURB RAMP
		ACCESSIBLE PARKING
VAN	VAN	VAN-ACCESSIBLE PARKING

Exist.	Prop.	
		CONCRETE
		HEAVY DUTY PAVEMENT
		RIPRAP
		CONSTRUCTION ENTRANCE
27.35 TC×	27.35 TC×	TOP OF CURB ELEVATION
26.85 BC×	26.85 BC×	BOTTOM OF CURB ELEVATION
132.75 ×	132.75 ×	SPOT ELEVATION
45.0 TW× 38.5 BW	45.0 TW× 38.5 BW	TOP & BOTTOM OF WALL ELEVATION
		BORING LOCATION
		TEST PIT LOCATION
MW	MW	MONITORING WELL
UD	UD	UNDERDRAIN
12"D	12"D	DRAIN
6"RD	6"RD	ROOF DRAIN
12"S	12"S	SEWER
FM	FM	FORCE MAIN
OHW	OHW	OVERHEAD WIRE
6"W	6"W	WATER
4"FP	4"FP	FIRE PROTECTION
	2"DW	DOMESTIC WATER
3"G	G	GAS
E	E	ELECTRIC
STM	STM	STEAM
T	T	TELEPHONE
FA	FA	FIRE ALARM
CATV	CATV	CABLE TV
		CATCH BASIN
		DOUBLE CATCH BASIN
		GUTTER INLET
D		DRAIN MANHOLE
TD		TRENCH DRAIN
		PLUG OR CAP
CO	CO	CLEANOUT
		FLARED END SECTION
		HEADWALL
S		SEWER MANHOLE
CS	CS	CURB STOP & BOX
WV	WV	WATER VALVE & BOX
TSV	TSV	TAPPING SLEEVE, VALVE & BOX
		SIAMESE CONNECTION
HYD	HYD	FIRE HYDRANT
WM	WM	WATER METER
PIV	PIV	POST INDICATOR VALVE
W	W	WATER WELL
GG	GG	GAS GATE
GM	GM	GAS METER
E	EMH	ELECTRIC MANHOLE
EM	EM	ELECTRIC METER
		LIGHT POLE
T	TMH	TELEPHONE MANHOLE
T	T	TRANSFORMER PAD
		UTILITY POLE
		GUY POLE
		GUY WIRE & ANCHOR
HH	HH	HAND HOLE
PB	PB	PULL BOX
Matchline		MATCHLINE

Abbreviations

General

ABAN	ABANDON
ACR	ACCESSIBLE CURB RAMP
ADJ	ADJUST
APPROX	APPROXIMATE
BIT	BITUMINOUS
BS	BOTTOM OF SLOPE
BWLL	BROKEN WHITE LANE LINE
CONC	CONCRETE
DYCL	DOUBLE YELLOW CENTER LINE
EL	ELEVATION
ELEV	ELEVATION
EXIST	EXISTING
FDN	FOUNDATION
FFE	FIRST FLOOR ELEVATION
GRAN	GRANITE
GTD	GRADE TO DRAIN
LA	LANDSCAPE AREA
LOD	LIMIT OF DISTURBANCE
MAX	MAXIMUM
MIN	MINIMUM
NIC	NOT IN CONTRACT
NTS	NOT TO SCALE
PERF	PERFORATED
PROP	PROPOSED
REM	REMOVE
RET	RETAIN
R&D	REMOVE AND DISPOSE
R&R	REMOVE AND RESET
SWEL	SOLID WHITE EDGE LINE
SWLL	SOLID WHITE LANE LINE
TS	TOP OF SLOPE
TYP	TYPICAL

Utility

CB	CATCH BASIN
CMP	CORRUGATED METAL PIPE
CO	CLEANOUT
DCB	DOUBLE CATCH BASIN
DMH	DRAIN MANHOLE
CIP	CAST IRON PIPE
COND	CONDUIT
DIP	DUCTILE IRON PIPE
FES	FLARED END SECTION
FM	FORCE MAIN
F&G	FRAME AND GRATE
F&C	FRAME AND COVER
GI	GUTTER INLET
GT	GREASE TRAP
HDPE	HIGH DENSITY POLYETHYLENE PIPE
HH	HANDHOLE
HW	HEADWALL
HYD	HYDRANT
INV	INVERT ELEVATION
I=	INVERT ELEVATION
LP	LIGHT POLE
MES	METAL END SECTION
PWW	PAVED WATER WAY
PVC	POLYVINYLCHLORIDE PIPE
RCP	REINFORCED CONCRETE PIPE
R=	RIM ELEVATION
SMH	SEWER MANHOLE
TSV	TAPPING SLEEVE, VALVE AND BOX
UG	UNDERGROUND
UP	UTILITY POLE

Notes:

General

1. CONTRACTOR SHALL NOTIFY "DIG-SAFE" (1-888-344-7233) AT LEAST 72 HOURS BEFORE EXCAVATING.
2. CONTRACTOR SHALL BE RESPONSIBLE FOR SITE SECURITY AND JOB SAFETY. CONSTRUCTION ACTIVITIES SHALL BE IN ACCORDANCE WITH OSHA STANDARDS AND LOCAL REQUIREMENTS.
3. ACCESSIBLE ROUTES, PARKING SPACES, RAMPS, SIDEWALKS AND WALKWAYS SHALL BE CONSTRUCTED IN CONFORMANCE WITH THE FEDERAL AMERICANS WITH DISABILITIES ACT AND WITH STATE AND LOCAL LAWS AND REGULATIONS (WHICHEVER ARE MORE STRINGENT).
4. AREAS DISTURBED DURING CONSTRUCTION AND NOT RESTORED WITH IMPERVIOUS SURFACES (BUILDINGS, PAVEMENTS, WALKS, ETC.) OR LANDSCAPING SHALL RECEIVE SIX INCHES LOAM AND SEED. REFER TO PLANS BY PROJECT ARCHITECT FOR LANDSCAPE PLANTINGS AND DETAILS.
5. WITHIN THE LIMITS OF THE BUILDING FOOTPRINT, THE SITE CONTRACTOR SHALL PERFORM EARTHWORK OPERATIONS REQUIRED UP TO SUBGRADE ELEVATIONS.
6. WORK WITHIN THE LOCAL RIGHTS-OF-WAY SHALL CONFORM TO LOCAL MUNICIPAL STANDARDS. WORK WITHIN STATE RIGHTS-OF-WAY SHALL CONFORM TO THE LATEST EDITION OF THE STATE HIGHWAY DEPARTMENTS STANDARD SPECIFICATIONS FOR HIGHWAYS AND BRIDGES.
7. UPON AWARD OF CONTRACT, CONTRACTOR SHALL MAKE NECESSARY CONSTRUCTION NOTIFICATIONS AND APPLY FOR AND OBTAIN NECESSARY PERMITS, PAY FEES, AND POST BONDS ASSOCIATED WITH THE WORK INDICATED ON THE DRAWINGS, IN THE SPECIFICATIONS, AND IN THE CONTRACT DOCUMENTS. DO NOT CLOSE OR OBSTRUCT ROADWAYS, SIDEWALKS, AND FIRE HYDRANTS, WITHOUT APPROPRIATE PERMITS.
8. TRAFFIC SIGNAGE AND PAVEMENT MARKINGS SHALL CONFORM TO THE MANUAL OF UNIFORM TRAFFIC CONTROL DEVICES.
9. AREAS OUTSIDE THE LIMITS OF PROPOSED WORK SHALL NOT BE DISTURBED BY THE CONTRACTOR'S OPERATIONS. ANY AREAS ACCIDENTALLY DISTURBED SHALL BE RESTORED BY THE CONTRACTOR TO THEIR ORIGINAL CONDITION AT THE CONTRACTOR'S EXPENSE. PRIOR TO CONSTRUCTION, CONTRACTOR SHALL PHOTO DOCUMENT CONDITIONS ALONG THE LIMIT OF WORK AS PART OF A PRE-CONSTRUCTION SITE WALK.
10. A PORTION OF THIS SITE IS SUBJECT TO MASSACHUSETTS DEP JURISDICTION AND IS SUBJECT OF A CLASS C RESPONSE ACTION OUTCOME. IN THE EVENT THAT SUSPECTED CONTAMINATED SOIL, GROUNDWATER, AND OTHER MEDIA ARE ENCOUNTERED DURING EXCAVATION AND CONSTRUCTION ACTIVITIES BASED ON VISUAL, OLFACTORY, OR OTHER EVIDENCE, THE CONTRACTOR SHALL STOP WORK IN THE VICINITY OF THE SUSPECT MATERIAL TO AVOID FURTHER SPREADING OF THE MATERIAL, AND SHALL NOTIFY THE OWNER IMMEDIATELY SO THAT THE APPROPRIATE TESTING AND SUBSEQUENT ACTION CAN BE TAKEN.
11. CONTRACTOR SHALL PREVENT DUST, SEDIMENT, AND DEBRIS FROM EXITING THE SITE AND SHALL BE RESPONSIBLE FOR CLEANUP, REPAIRS AND CORRECTIVE ACTION IF SUCH OCCURS.
12. DAMAGE RESULTING FROM CONSTRUCTION LOADS SHALL BE REPAIRED BY THE CONTRACTOR AT NO ADDITIONAL COST TO OWNER.
13. CONTRACTOR SHALL CONTROL STORMWATER RUNOFF DURING CONSTRUCTION TO PREVENT ADVERSE IMPACTS TO OFF SITE AREAS, AND SHALL BE RESPONSIBLE TO REPAIR RESULTING DAMAGES, IF ANY, AT NO COST TO OWNER. REFER TO ADDITIONAL EROSION CONTROL NOTES ALSO LOCATED ON THIS SHEET.
14. THIS PROJECT DISTURBS MORE THAN ONE ACRE OF LAND AND FALLS WITHIN THE NPDES CONSTRUCTION GENERAL PERMIT (CGP) PROGRAM AND EPA JURISDICTION. PRIOR TO THE START OF CONSTRUCTION CONTRACTOR IS TO FILE A CGP NOTICE OF INTENT WITH THE EPA AND PREPARE A STORMWATER POLLUTION PREVENTION PLAN IN ACCORDANCE WITH THE NPDES REGULATIONS. CONTRACTOR SHALL CONFIRM THE OWNER HAS ALSO FILED A NOTICE OF INTENT WITH THE EPA.
15. ANY PROPOSED SURFACE OPENINGS AND EXCAVATION WORK WITHIN THE TOWN RIGHT-OF-WAY LIMITS (PUBLIC WAYS) WILL REQUIRE A STREET OPENING PERMIT (SOP) WITH THE WORK CONDUCTED UNDER SAID PERMIT BEING PERFORMED IN COMPLIANCE WITH THE TOWN OF FRAMINGHAM SOP POLICY. PER THIS POLICY, APPROPRIATE AND ADEQUATE INSURANCE AND SURETY SHALL BE PROVIDED TO COVER THE PROPOSED WORK. SURETY VALUE TO BE DETERMINED BASED ON THE PROPOSED WORK.
16. A TRENCH OPENING PERMIT (TOP) SHALL BE OBTAINED PRIOR TO THE EXCAVATION OF ANY TRENCH. A TRENCH IS DEFINED UNDER MGL 82A AND 520 CMR 14.00 AS ANY EXCAVATION GREATER THAN 3' IN DEPTH AND LESS THAN 15' BETWEEN SOIL WALLS AS MEASURED FROM THE BOTTOM.

Utilities

1. THE LOCATIONS, SIZES, AND TYPES OF EXISTING UTILITIES ARE SHOWN AS AN APPROXIMATE REPRESENTATION ONLY. THE OWNER OR ITS REPRESENTATIVE(S) HAVE NOT INDEPENDENTLY VERIFIED THIS INFORMATION AS SHOWN ON THE PLANS. THE UTILITY INFORMATION SHOWN DOES NOT GUARANTEE THE ACTUAL EXISTENCE, SERVICEABILITY, OR OTHER DATA CONCERNING THE UTILITIES, NOR DOES IT GUARANTEE AGAINST THE POSSIBILITY THAT ADDITIONAL UTILITIES MAY BE PRESENT THAT ARE NOT SHOWN ON THE PLANS. PRIOR TO ORDERING MATERIALS AND BEGINNING CONSTRUCTION, THE CONTRACTOR SHALL VERIFY AND DETERMINE THE EXACT LOCATIONS, SIZES, AND ELEVATIONS OF THE POINTS OF CONNECTIONS TO EXISTING UTILITIES AND, SHALL CONFIRM THAT THERE ARE NO INTERFERENCES WITH EXISTING UTILITIES AND THE PROPOSED UTILITY ROUTES, INCLUDING ROUTES WITHIN THE PUBLIC RIGHTS OF WAY.
2. WHERE AN EXISTING UTILITY IS FOUND TO CONFLICT WITH THE PROPOSED WORK, OR EXISTING CONDITIONS DIFFER FROM THOSE SHOWN SUCH THAT THE WORK CANNOT BE COMPLETED AS INTENDED, THE LOCATION, ELEVATION, AND SIZE OF THE UTILITY SHALL BE ACCURATELY DETERMINED WITHOUT DELAY BY THE CONTRACTOR, AND THE INFORMATION FURNISHED IN WRITING TO THE OWNER'S REPRESENTATIVE FOR THE RESOLUTION OF THE CONFLICT AND CONTRACTOR'S FAILURE TO NOTIFY PRIOR TO PERFORMING ADDITIONAL WORK RELEASES OWNER FROM OBLIGATIONS FOR ADDITIONAL PAYMENTS WHICH OTHERWISE MAY BE WARRANTED TO RESOLVE THE CONFLICT.
3. ALL WORK WITHIN PUBLIC WAYS AND ASSOCIATED WITH WATER DISTRIBUTION AND SEWAGE COLLECTION MUST BE INSPECTED BY A DEPARTMENT OF PUBLIC WORKS UTILITY INSPECTOR. TO SCHEDULE A PRE-CONSTRUCTION MEETING, CONTACT THE TOWN OF FRAMINGHAM ENGINEERING DIVISION AT (508) 532-6022 OR (508) 532-6010 48 HOURS PRIOR TO THE START OF WORK. ALL SITE DRAINAGE, WATER, AND SANITARY SEWER WORK OUTSIDE OF A BUILDING FOOTPRINT SHALL BE PERFORMED BY A LICENSED FRAMINGHAM DRAINLAYER.
4. SET CATCH BASIN RIMS, AND INVERTS OF SEWERS, DRAINS, AND DITCHES IN ACCORDANCE WITH ELEVATIONS ON THE GRADING AND UTILITY PLANS.
5. RIM ELEVATIONS FOR DRAIN AND SEWER MANHOLES, WATER VALVE COVERS, GAS GATES, ELECTRIC AND TELEPHONE PULL BOXES, AND MANHOLES, AND OTHER SUCH ITEMS, ARE APPROXIMATE AND SHALL BE SET/RESET AS FOLLOWS:
   A. PAVEMENTS AND CONCRETE SURFACES: FLUSH
   B. ALL SURFACES ALONG ACCESSIBLE ROUTES: FLUSH
   C. LANDSCAPE, LOAM AND SEED, AND OTHER EARTH SURFACE AREAS: ONE INCH ABOVE SURROUNDING AREA AND TAPER EARTH TO THE RIM ELEVATION.
6. THE LOCATION, SIZE, DEPTH, AND SPECIFICATIONS FOR CONSTRUCTION OF PROPOSED PRIVATE UTILITY SERVICES SHALL BE INSTALLED ACCORDING TO THE REQUIREMENTS PROVIDED BY, AND APPROVED BY, THE RESPECTIVE UTILITY COMPANY (GAS, TELEPHONE, ELECTRIC, FIRE ALARM, ETC.). FINAL DESIGN LOADS AND LOCATIONS TO BE COORDINATED WITH OWNER AND ARCHITECT.
7. CONTRACTOR SHALL MAKE ARRANGEMENTS FOR AND SHALL BE RESPONSIBLE FOR PAYING FEES FOR POLE RELOCATION AND FOR THE ALTERATION AND ADJUSTMENT OF GAS, ELECTRIC, TELEPHONE, FIRE ALARM, AND ANY OTHER PRIVATE UTILITIES, WHETHER WORK IS PERFORMED BY CONTRACTOR OR BY THE UTILITIES COMPANY.
8. AS OUTLINED IN THE AFOREMENTIONED STANDARDS, UTILITY PIPE MATERIALS SHALL BE AS FOLLOWS, UNLESS OTHERWISE NOTED ON THE PLAN:
   A. WATER MAINS SHALL BE DUCTILE IRON CLASS 52 OR GREATER. WATER SERVICE PIPES SHALL BE TYPE K COPPER AND FITTINGS SHALL BE LEAD-FREE.
   B. SANITARY SEWER PIPES SHALL BE POLYVINYL CHLORIDE (PVC) SDR-35 SEWER PIPE OR GREATER
   C. STORM DRAINAGE PIPES SHALL BE HIGH DENSITY POLYETHYLENE (HDPE) OR REINFORCED CONCRETE PIPE (RCP) WHERE SHALLOW COVER EXISTS OR REQUIRED BY TOWN OF FRAMINGHAM DEPARTMENT OF PUBLIC WORKS
   D. PIPE INSTALLATION AND MATERIALS SHALL COMPLY WITH THE STATE PLUMBING CODE WHERE APPLICABLE. CONTRACTOR SHALL COORDINATE WITH LOCAL PLUMBING INSPECTOR PRIOR TO BEGINNING WORK.
   E. REFER TO TOWN OF FRAMINGHAM DEPARTMENT OF PUBLIC WORKS CONSTRUCTION STANDARDS FOR DETAIL REGARDING UTILITY MATERIALS AND INSTALLATION REQUIREMENTS.
9. WATER MAINS AND APPURTENANCES SHALL BE PRESSURE TESTED, DISINFECTED, AND FLUSHED IN ACCORDANCE WITH TOWN OF FRAMINGHAM DEPARTMENT OF PUBLIC WORKS CONSTRUCTION STANDARDS. SEWER MAINS AND MANHOLES SHALL BE PRESSURE/VACUUM TESTED, MANDREL TESTED, AND VIDEO INSPECTED IN ACCORDANCE WITH TOWN OF FRAMINGHAM DEPARTMENT OF PUBLIC WORKS CONSTRUCTION STANDARDS. DPW PERSONNEL SHALL WITNESS THIS WATER AND SEWER UTILITY TESTING AND SHALL BE PROVIDED WITH TEST DOCUMENTATION.
10. SWING TIES AND RECORD CARDS FOR ALL SERVICE STUBS/CONNECTIONS SHALL BE PREPARED BY THE DEVELOPER AND PROVIDED TO THE TOWN OF FRAMINGHAM.
11. CONTRACTOR SHALL COORDINATE WITH ELECTRICAL CONTRACTOR AND SHALL FURNISH EXCAVATION, INSTALLATION, AND BACKFILL OF ELECTRICAL FURNISHED SITEWORK RELATED ITEMS SUCH AS PULL BOXES, CONDUITS, DUCT BANKS, LIGHT POLE BASES, AND CONCRETE PADS. SITE CONTRACTOR SHALL FURNISH CONCRETE ENCASEMENT OF DUCT BANKS IF REQUIRED BY THE UTILITY COMPANY AND AS INDICATED ON THE DRAWINGS.
12. CONTRACTOR SHALL EXCAVATE AND BACKFILL TRENCHES FOR GAS IN ACCORDANCE WITH GAS COMPANY'S REQUIREMENTS.
13. ALL DRAINAGE AND SANITARY STRUCTURE INTERIOR DIAMETERS (4' MIN.) SHALL BE DETERMINED BY THE MANUFACTURER BASED ON THE PIPE CONFIGURATIONS SHOWN ON THESE PLANS AND LOCAL MUNICIPAL STANDARDS. FOR MANHOLES THAT ARE 12 FEET IN DEPTH AND GREATER, THE MINIMUM DIAMETER SHALL BE 5 FEET.

Layout and Materials

1. DIMENSIONS ARE FROM THE FACE OF CURB, FACE OF BUILDING, FACE OF WALL, AND CENTER LINE OF PAVEMENT MARKINGS, UNLESS OTHERWISE NOTED.
2. CURB RADII ARE FIVE FEET UNLESS OTHERWISE NOTED.
3. CURBING SHALL BE EXTRUDED CONCRETE CURB WITHIN THE SITE UNLESS OTHERWISE INDICATED ON THE PLANS.
4. SEE ARCHITECTURAL DRAWINGS FOR EXACT BUILDING DIMENSIONS AND DETAILS CONTIGUOUS TO THE BUILDING, INCLUDING SIDEWALKS, RAMPS, BUILDING ENTRANCES, STAIRWAYS, UTILITY PENETRATIONS, CONCRETE DOOR PADS, COMPACTOR PAD, LOADING DOCKS, BOLLARDS, ETC.
5. PROPOSED BOUNDS AND ANY EXISTING PROPERTY LINE MONUMENTATION DISTURBED DURING CONSTRUCTION SHALL BE SET OR RESET BY A PROFESSIONAL LICENSED SURVEYOR.
6. PRIOR TO START OF CONSTRUCTION, CONTRACTOR SHALL VERIFY EXISTING PAVEMENT ELEVATIONS AT INTERFACE WITH PROPOSED PAVEMENTS, AND EXISTING GROUND ELEVATIONS ADJACENT TO DRAINAGE OUTLETS TO ASSURE PROPER TRANSITIONS BETWEEN EXISTING AND PROPOSED FACILITIES.
7. SYMBOLS AND LEGENDS OF PROJECT FEATURES ARE GRAPHIC REPRESENTATIONS AND ARE NOT NECESSARILY SCALED TO THEIR ACTUAL DIMENSIONS OR LOCATIONS ON THE DRAWINGS. THE CONTRACTOR SHALL REFER TO THE DETAIL SHEET DIMENSIONS, MANUFACTURERS' LITERATURE, SHOP DRAWINGS AND FIELD MEASUREMENTS OF SUPPLIED PRODUCTS FOR LAYOUT OF THE PROJECT FEATURES.
8. CONTRACTOR SHALL NOT RELY SOLELY ON ELECTRONIC VERSIONS OF PLANS, SPECIFICATIONS, AND DATA FILES THAT ARE OBTAINED FROM THE DESIGNERS, BUT SHALL VERIFY LOCATION OF PROJECT FEATURES IN ACCORDANCE WITH THE PAPER COPIES OF THE PLANS AND SPECIFICATIONS THAT ARE SUPPLIED AS PART OF THE CONTRACT DOCUMENTS.
9. MATERIALS SPECIFIED HEREIN FOR THE PROJECT MAY BE SUBSTITUTED FOR AN ALTERNATE OF EQUAL FUNCTION WITH THE APPROVAL OF OWNER AND ENGINEER.
10. DECKS AND PATIOS SHOWN FOR ILLUSTRATIVE PURPOSES ONLY. FINAL SIZE AND LOCATION MAY VARY.

Demolition

1. CONTRACTOR SHALL REMOVE AND DISPOSE OF EXISTING MANMADE SURFACE FEATURES WITHIN THE LIMIT OF WORK INCLUDING BUILDINGS, STRUCTURES, PAVEMENTS, SLABS, CURBING, FENCES, UTILITY POLES, SIGNS, ETC. UNLESS INDICATED OTHERWISE ON THE DRAWINGS. REMOVE AND DISPOSE OF EXISTING UTILITIES, FOUNDATIONS AND UNSUITABLE MATERIAL BENEATH AND FOR A DISTANCE OF 10 FEET BEYOND THE PROPOSED BUILDING FOOTPRINT INCLUDING EXTERIOR COLUMNS.
2. EXISTING UTILITIES SHALL BE TERMINATED, UNLESS OTHERWISE NOTED, IN CONFORMANCE WITH LOCAL, STATE AND INDIVIDUAL UTILITY COMPANY STANDARD SPECIFICATIONS AND DETAILS. THE CONTRACTOR SHALL COORDINATE UTILITY SERVICE DISCONNECTS WITH THE UTILITY REPRESENTATIVES.
3. CONTRACTOR SHALL DISPOSE OF DEMOLITION DEBRIS IN ACCORDANCE WITH APPLICABLE FEDERAL, STATE AND LOCAL REGULATIONS, ORDINANCES AND STATUTES.
4. THE DEMOLITION LIMITS DEPICTED IN THE PLANS IS INTENDED TO AID THE CONTRACTOR DURING THE BIDDING AND CONSTRUCTION PROCESS AND IS NOT INTENDED TO DEPICT EACH AND EVERY ELEMENT OF DEMOLITION. THE CONTRACTOR IS RESPONSIBLE FOR IDENTIFYING THE DETAILED SCOPE OF DEMOLITION BEFORE SUBMITTING ITS BID/PROPOSAL TO PERFORM THE WORK AND SHALL MAKE NO CLAIMS AND SEEK NO ADDITIONAL COMPENSATION FOR CHANGED CONDITIONS OR UNFORESEEN OR LATENT SITE CONDITIONS RELATED TO ANY CONDITIONS DISCOVERED DURING EXECUTION OF THE WORK.
5. UNLESS OTHERWISE SPECIFICALLY PROVIDED ON THE PLANS OR IN THE SPECIFICATIONS, THE ENGINEER HAS NOT PREPARED DESIGNS FOR AND SHALL HAVE NO RESPONSIBILITY FOR THE PRESENCE, DISCOVERY, REMOVAL, ABATEMENT OR DISPOSAL OF HAZARDOUS MATERIALS, TOXIC WASTES OR POLLUTANTS AT THE PROJECT SITE. THE ENGINEER SHALL NOT BE RESPONSIBLE FOR ANY CLAIMS OF LOSS, DAMAGE, EXPENSE, DELAY, INJURY OR DEATH ARISING FROM THE PRESENCE OF HAZARDOUS MATERIAL AND CONTRACTOR SHALL INDEMNIFY AND HOLD HARMLESS THE ENGINEER FROM ANY CLAIMS MADE IN CONNECTION THEREWITH. MOREOVER, THE ENGINEER SHALL HAVE NO ADMINISTRATIVE OBLIGATIONS OF ANY TYPE WITH REGARD TO ANY CONTRACTOR AMENDMENT INVOLVING THE ISSUES OF PRESENCE, DISCOVERY, REMOVAL, ABATEMENT OR DISPOSAL OF ASBESTOS OR OTHER HAZARDOUS MATERIALS.

Erosion Control

1. AS OUTLINED IN GENERAL NOTES 13 & 14, PRIOR TO STARTING ANY OTHER WORK ON THE SITE, THE CONTRACTOR SHALL NOTIFY APPROPRIATE AGENCIES AND SHALL INSTALL EROSION CONTROL MEASURES AS SHOWN ON THE PLANS AND AS IDENTIFIED IN FEDERAL, STATE, AND LOCAL APPROVAL DOCUMENTS PERTAINING TO THIS PROJECT.
2. CONTRACTOR SHALL BE FULLY RESPONSIBLE TO CONTROL CONSTRUCTION AND MAINTAIN EROSION CONTROL MEASURES IN ACCORDANCE WITH THE STORMWATER POLLUTION PREVENTION PLAN AND ALL APPLICABLE PERMITS AND REGULATIONS.

Existing Conditions Information

1. BASE PLAN: THE PROPERTY LINES SHOWN WERE DETERMINED BY AN ACTUAL FIELD SURVEY CONDUCTED BY METROWEST ENGINEERING INC., VANASSE HANGEN BRUSTLIN, INC. AND FROM PLANS AND DEEDS OF RECORD. THE TOPOGRAPHY AND PHYSICAL FEATURES OF PORTIONS OF THE SITE SOUTH OF THE AQUEDUCT WERE DEVELOPED BASED ON AN AERIAL PHOTOGRAMMETRIC MAPPING BY EASTERN TOPOGRAPHICS, INC., BASED ON AERIAL PHOTOGRAPHS TAKEN IN JUNE, 2012.
   A. DELINEATION OF THE WETLAND RESOURCE AREAS SOUTH OF THE AQUEDUCT AND PLACEMENT OF THE FLAGS WAS PERFORMED BY VANASSE HANGEN BRUSTLIN, INC. IN MAY AND AUGUST 2012. WETLANDS NORTH OF THE AQUEDUCT WERE DELINEATED BY OTHERS IN APPROXIMATELY 2002.
   B. FLAGS MARKING THE WETLANDS TO THE SOUTH OF THE AQUEDUCT WERE LOCATED BY VANASSE HANGEN BRUSTLIN, INC. IN AUGUST AND SEPTEMBER 2012.
2. TOPOGRAPHY: ELEVATIONS ARE BASED ON NAVD OF 1988.
3. GEOTECHNICAL DATA INCLUDING TEST PIT AND BORING LOCATIONS AND ELEVATIONS WERE OBTAINED FROM MCGARDLE GANNON ASSOCIATES, INC.
4. AREAS SHOWN HEREON AND LABELED AS ISOLATED DEPRESSION ARE DELINEATED AS WETLAND RESOURCE AREAS THAT MAY BE REGULATED UNDER THE TOWN OF FRAMINGHAM WETLAND BY-LAW ONLY. NO DISTURBANCE OF THE ISOLATED DEPRESSIONS SHALL OCCUR UNTIL APPROPRIATE PERMITS AND APPROVALS ARE GRANTED.

Document Use

1. THESE PLANS AND CORRESPONDING CADD DOCUMENTS ARE INSTRUMENTS OF PROFESSIONAL SERVICE, AND SHALL NOT BE USED, IN WHOLE OR IN PART, FOR ANY PURPOSE OTHER THAN FOR WHICH IT WAS CREATED WITHOUT THE EXPRESSED, WRITTEN CONSENT OF VHB. ANY UNAUTHORIZED USE, REUSE, MODIFICATION OR ALTERATION, INCLUDING AUTOMATED CONVERSION OF THIS DOCUMENT SHALL BE AT THE USER'S SOLE RISK WITHOUT LIABILITY OR LEGAL EXPOSURE TO VHB.

VHB
Vanasse Hangen Brustlin, Inc.
Transportation
Land Development
Environmental Services

Union Station, Suite 219
2 Washington Square
Worcester, Massachusetts 01604
508.752.1001 • FAX 508.752.1276

PLAN INTENT:
THIS PLAN DEPICTS THE PROJECT AT A LEVEL OF DETAIL SUFFICIENT TO MEET THE REQUIREMENTS OF PERMITTING BUT IS NOT INTENDED TO INCLUDE DETAILS SUFFICIENT FOR CONSTRUCTION.

FRAMINGHAM PLANNING BOARD
DEFINITIVE DEVELOPMENT PLAN APPROVALS

THIS ENDORSEMENT OF THE PLANNING BOARD SHOULD NOT BE CONSTRUED TO BE DETERMINATION OF CONFORMANCE WITH ZONING REGULATIONS.

No.	Revision	Date	Appvd.
1	RESPONSE TO COMMENTS	4/16/13	CCL

Designed by JWD	Drawn by REW	Checked by CCL
CAD checked by REW	Approved by CCL	
Scale N/A	Date November 12, 2012	

Project Title
Danforth Green

Framingham, Massachusetts

Issued for
Permitting

NOT FOR CONSTRUCTION

Drawing Title
Legend and
General Notes

Drawing Number
C-1

Sheet 1 of 27

Project Number
12004.00

\\VHB\PROJ\WORCESTER\12004.00\CAD\LD\PLANSET\12004.00-OPENSPACE

Saved Tuesday, May 14, 2013 1:38:34 PM BIZSNER Plotted Tuesday, May 14, 2013 1:43:21 PM Geiner, Brittany

Open Land Requirements Table

	Required	Provided
TOTAL DEVELOPABLE PUD DISTRICT LAND	50.0 AC	104.5 AC
PUBLIC OPEN SPACE	WETLAND AREA WITHIN PUD DISTRICT	21.9 AC [1]
COMMON OPEN SPACE	MIN. 25% OF TOTAL DEVELOPABLE AREA WITHIN PUD DISTRICT LESS ROADS, PARKING, BUILDINGS, AND STRUCTURES 0.25 x (86.2 AC) = 21.6 AC	27.5 AC [2]
COMMON OPEN SPACE SUITABLE FOR PASSIVE OR ACTIVE RECREATION	MIN. 50% OF REQUIRED COMMON OPEN SPACE 0.50 x (21.6 AC) = 10.8 AC	18.9 AC

1. INCLUDES ONLY WETLANDS SUBJECT TO MASS DEP JURISDICTION.
2. INCLUDES BOTH COMMON OPEN SPACE AND COMMON OPEN SPACE SUITABLE FOR PASSIVE OR ACTIVE RECREATION.
3. AS DEPICTED HEREON, OPEN SPACE, FOR THE PURPOSES OF ZONING COMPLIANCE, IS KEPT A MINIMUM OF 10' FROM ALL BUILDINGS.
4. FINAL RENTAL COMPONENT PROPERTY LINE IS SUBJECT TO APPROVAL UNDER ANR PROCESS BY TOWN OF FRAMINGHAM PLANNING BOARD.

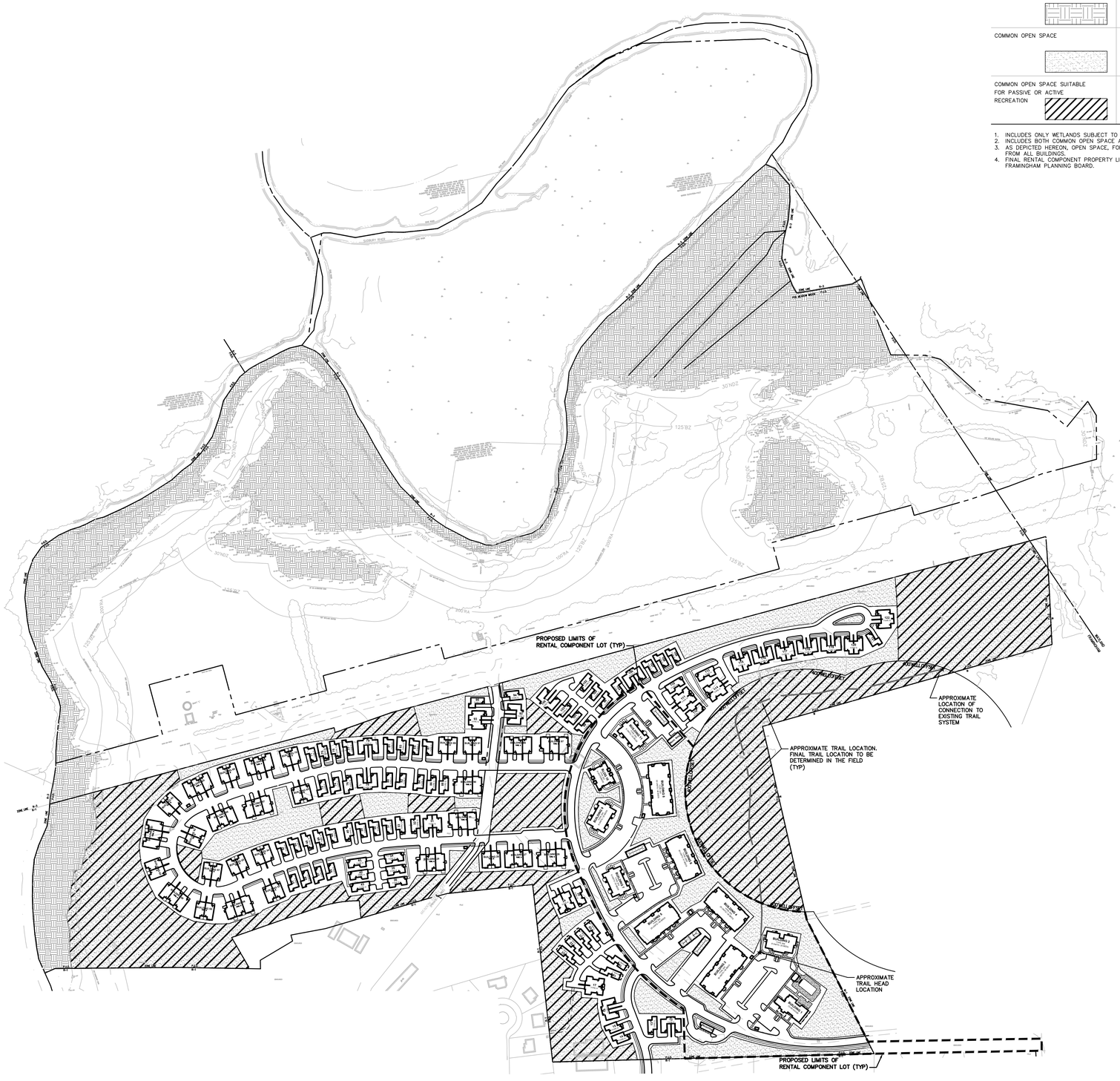

VHB
Vanasse Hangen Brustlin, Inc.

Transportation
Land Development
Environmental Services

Union Station, Suite 219
2 Washington Square
Worcester, Massachusetts 01604
508.752.1001 • FAX 508.752.1276

PLAN INTENT:
THIS PLAN DEPICTS THE PROJECT AT A LEVEL OF DETAIL SUFFICIENT TO MEET THE REQUIREMENTS OF PERMITTING BUT IS NOT INTENDED TO INCLUDE DETAILS SUFFICIENT FOR CONSTRUCTION.

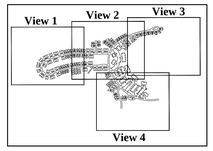

Sheet Key
1" = 1200'

FRAMINGHAM PLANNING BOARD
DEFINITIVE DEVELOPMENT PLAN APPROVALS

THIS ENDORSEMENT OF THE PLANNING BOARD SHOULD NOT BE CONSTRUED TO BE DETERMINATION OF CONFORMANCE WITH ZONING REGULATIONS.

No.	Revision	Date	Appvd.
3	SPECIAL PERMIT REVISIONS	5/14/13	CCL
2	RESPONSE TO COMMENTS	4/29/13	CCL
1	RESPONSE TO COMMENTS	4/16/13	CCL

Designed by JDT	Drawn by REW	Checked by CCL	
CAD checked by CCL	Approved by CCL		
Scale 1"=150'	Date November 12, 2012		

Project Title
Danforth Green

Framingham, Massachusetts

Issued for
Permitting

NOT FOR CONSTRUCTION

Drawing Title
Open Space Plan

Drawing Number
C-2

Sheet of
2 27

Project Number
12004.00

COMMONWEALTH OF MASSACHUSETTS
CRAIG C. LIZOTTE
CIVIL
NO. 39010
REGISTERED PROFESSIONAL ENGINEER

Project Manager: JDT Project Engineer: CCL Designer: REW Drawn: REW Check: CCL Date: 11/12/2012 - 11:37 PM Plotted: 11

\\VHB\PROJ\WORCESTER\12004.00\CAD\LD\PLANSET\12004.00-LM

Saved Tuesday, May 14, 2013 1:22:07 PM BIGSNER Plotted Tuesday, May 14, 2013 1:44:36 PM Gesner, Brittany

PUD Zoning Summary Chart

UNDERLYING ZONING CLASSIFICATION: GENERAL MANUFACTURING

Zoning Requirements	Required / Allowed	Proposed
TOTAL P.U.D. AREA	50 AC. MINIMUM	126.4 AC (5,504,180 SQ. FT.)
P.U.D. WETLAND AREA	N/A	21.9 AC (953,964 SQ. FT.) [2]
TOTAL DEVELOPABLE P.U.D. LAND AREA	N/A	104.5 AC (4,552,020 SQ. FT.)
TOTAL NUMBER OF PUD UNITS	MAX. 7 UNITS PER DEVELOPABLE P.U.D. ACRE = 731	353 UNITS (3.4 UNITS PER ACRE)
NUMBER OF AFFORDABLE UNITS	10% MIN.	10% (36 UNITS)
FLOOR AREA RATIO	MAX. 0.32 OF DEVELOPABLE P.U.D. LAND	0.12
GROUND COVERAGE	MAX. 40% OF DEVELOPABLE P.U.D. LAND (0.4) x (104.5 AC) = 41.8 AC (1,820,808 SF)	16.9% OF DEVELOPABLE P.U.D. LAND ±17.7 AC (771,012 SQ. FT.)
SETBACK REQUIREMENTS: FROM P.U.D. LINE	50 FT.	50 FT.
FRONT SETBACK (FROM STREET OR LOT LINES)	30 FT.	12 FT. MIN. [4]
SEPARATION OF BUILDINGS	30 FT. OR HEIGHT OF BUILDINGS OVER 40 FT.	10 FT. MIN. [4]
BUILDING HEIGHTS	MAX. 3 STORIES OR 40 FT.	TYPE 100 & 200 = MAX. 3 STORIES/51' [4][5] TYPE 200S = 4 STORIES/57' [4][5] ALL OTHER BLDGS = MAX. 3 STORIES/40'
PUBLIC OPEN SPACE	WETLAND AREA WITHIN PUD	21.9 AC (953,964 SQ. FT.) [2]
COMMON OPEN SPACE	MIN. 25% OF TOTAL DEVELOPABLE AREA WITHIN PUD LESS ROADS, PARKING, BLDGS, AND STRUCTURES (0.25) x (86.2 AC) = 21.6 AC (940,896 SQ. FT.)	27.5 AC± (1,197,900 SQ. FT.) [3]
COMMON OPEN SPACE SUITABLE FOR PASSIVE/ACTIVE RECREATION	MIN. 50% OF REQUIRED COMMON OPEN SPACE (0.5) x (21.6 AC) = 10.8 AC (470,448 SQ. FT.)	18.9 AC± (823,284 SQ. FT.)

1. REQUESTED RELIEF GRANTED BY FRAMINGHAM ZONING BOARD OF APPEALS AT HEARING ON MARCH 19, 2013. FINAL DECISION FORTHCOMING.
2. INCLUDES ONLY WETLANDS SUBJECT TO MASS DEP JURISDICTION.
3. INCLUDES BOTH COMMON OPEN SPACE AND COMMON OPEN SPACE SUITABLE FOR PASSIVE OR ACTIVE RECREATION.
4. BUILDING HEIGHT CALCULATED IN ACCORDANCE WITH SECTION III.6.f. OF THE TOWN OF FRAMINGHAM ZONING BY-LAW AND BASED ON INPUT FROM PROJECT ARCHITECT.
5. AVERAGE GRADE CALCULATED APPROXIMATELY ONE FOOT OFF OF BUILDING PERIMETER.
6. DIMENSIONS PROVIDED ON PLANS TO DEPICT WHERE RELIEF IS REQUIRED.

Parking Summary Chart [1]

Description	Size
STANDARD SPACES (TYPICAL)	9' x 18' & 10' x 18' END STALLS

Use	Required	
CLUBHOUSE/ LEASING OFFICE	1 SPACE PER 2 EMPLOYEES 6 EMPLOYEES x 1 SPACE / 2 EMPLOYEES = 3 SPACES	
MULTI-FAMILY UNITS & COTTAGES FOR SALE	MINIMUM OF 2 SPACES PER DWELLING UNIT OR ONE PER BEDROOM, WHICHEVER IS GREATER	
	2 BEDROOM: 102 UNITS @ 1 SPACE / BR x 2 BR = 204 SPACES	
	3 BEDROOM: 71 UNITS @ 1 SPACE / BR x 3 BR = 213 SPACES	
APARTMENTS FOR RENT	MINIMUM OF TWO SPACES PER DWELLING UNIT OR ONE PER BEDROOM, WHICHEVER IS GREATER	
	1 BEDROOM: 71 UNITS @ 2 SPACES / UNIT = 142 SPACES	
	2 BEDROOM: 95 UNITS @ 1 SPACE / BR x 2 BR = 190 SPACES	
	3 BEDROOM: 14 UNITS @ 1 SPACE / BR x 3 BR = 42 SPACES	
TOTAL	TOTAL REQUIRED = 794 SPACES TOTAL PROVIDED = 913 SPACES	

1. ACCESSIBLE SPACES SHALL BE PROVIDED IN ACCORDANCE WITH APPLICABLE FEDERAL, STATE AND LOCAL REQUIREMENTS

Sign Summary

M.U.T.C.D. Number	Specification Width	Specification Height	Desc.
R1-1	30"	30"	STOP
R7-8	12"	18"	RESERVED PARKING
R7-8P	12"	6"	VAN ACCESS
R5-1	30"	30"	DO NOT ENTER

Summary of Relief Requested

Description	Required / Allowed	Requested
AMOUNT OF RENTAL UNITS (ZBA)	MAX ALLOWED=20% OF TOTAL UNITS – AFFORDABLE UNITS 0.2 x (360 UNITS – 36 UNITS) = 65 RENTAL UNITS	SEE ZONING BOARD OF APPEALS DECISION FROM MARCH 19, 2013 HEARING
BUILDING HEIGHT (ZBA)	MAX. 3 STORIES OR 40 FT.	SEE ZONING BOARD OF APPEALS DECISION FROM MARCH 19, 2013 HEARING
BUILDING SEPARATION (PLANNING BOARD)	30 FT. OR HEIGHT OF BUILDINGS OVER 40 FT.	VARIES, SEE PLAN
SUBDIVISION ROAD STANDARDS (PLANNING BOARD)	CURB/GUTTER & CLOSED DRAINAGE SYSTEM; 500' DEAD-END STREET LENGTH	LOW IMPACT DEVELOPMENT BASED DESIGN AS DEPICTED HEREIN
FRONT SETBACK (PLANNING BOARD)	30 FEET MIN.	VARIES, SEE PLAN

1. REQUESTED RELIEF GRANTED BY FRAMINGHAM ZONING BOARD OF APPEALS AT HEARING ON MARCH 19, 2013. FINAL DECISION FORTHCOMING.
2. SEE ARCHITECTURAL PLANS FOR BUILDING FOOTPRINTS, DETAILS, AND DIMENSIONS.

Building Summary Chart

Unit Type	Units	Beds
MULTI-FAMILY DWELLINGS AND COTTAGES (FOR SALE) [1]	173 UNITS	417 BEDS
TOWNHOMES & APARTMENTS (FOR RENT) [1]	180 UNITS	303 BEDS
TOTAL DWELLING UNITS	**353 UNITS**	**720 BEDS**
CLUBHOUSE/OFFICE SPACE	4,761 SQ. FT. [2]	N/A
RECYCLING CENTER	855 SQ. FT.	N/A
POOL CABANA	425 SQ. FT.	N/A

1. INCLUDES 36 AFFORDABLE UNITS.
2. CLUBHOUSE INCLUDES 1,300 SQ. FT. LEASING OFFICE.

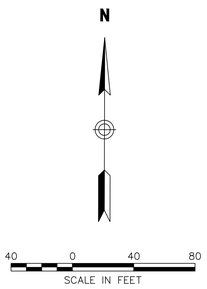

PLAN INTENT:
THIS PLAN DEPICTS THE PROJECT AT A LEVEL OF DETAIL SUFFICIENT TO MEET THE REQUIREMENTS OF PERMITTING BUT IS NOT INTENDED TO INCLUDE DETAILS SUFFICIENT FOR CONSTRUCTION.

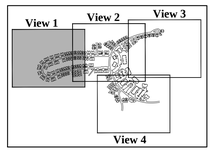

Sheet Key

1" = 1200'

FRAMINGHAM PLANNING BOARD
DEFINITIVE DEVELOPMENT PLAN APPROVALS

THIS ENDORSEMENT OF THE PLANNING BOARD SHOULD NOT BE CONSTRUED TO BE DETERMINATION OF CONFORMANCE WITH ZONING REGULATIONS.

No.	Revision	Date	Appvd.
3	SPECIAL PERMIT REVISIONS	5/14/13	CCL
2	RESPONSE TO COMMENTS	4/29/13	CCL
1	RESPONSE TO COMMENTS	4/16/13	CCL

Designed by JDT | Drawn by JDT | Checked by CCL
CAD checked by CCL | Approved by CCL
Scale 1"=40' | Date November 12, 2012

Project Title
Danforth Green

Framingham, Massachusetts

Issued for
Permitting

NOT FOR CONSTRUCTION

Drawing Title
Layout and Materials Plan

Drawing Number
C-3.1

Sheet of
3 27

Project Number
12004.00

VHB
Vanasse Hangen Brustlin, Inc.
Transportation
Land Development
Environmental Services
Union Station, Suite 219
2 Washington Square
Worcester, Massachusetts 01604
508.752.1001 • FAX 508.752.1276

COMMONWEALTH OF MASSACHUSETTS CRAIG C. LUSTYK CIVIL No. 39913 REGISTERED PROFESSIONAL ENGINEER

VHB

Vanasse Hangen Brustlin, Inc.

Transportation
Land Development
Environmental Services

Union Station, Suite 219
2 Washington Square
Worcester, Massachusetts 01604
508.752.1001 • FAX 508.752.1276

PLAN INTENT:
THIS PLAN DEPICTS THE PROJECT AT A LEVEL OF DETAIL SUFFICIENT TO MEET THE REQUIREMENTS OF PERMITTING BUT IS NOT INTENDED TO INCLUDE DETAILS SUFFICIENT FOR CONSTRUCTION.

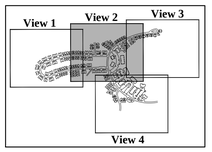

Sheet Key
1" = 1200'

NOTE:
FOR DETAILED BUILDING DIMENSIONS REFER TO ARCHITECTURAL PLANS.

FRAMINGHAM PLANNING BOARD
DEFINITIVE DEVELOPMENT PLAN APPROVALS

THIS ENDORSEMENT OF THE PLANNING BOARD SHOULD NOT BE CONSTRUED TO BE DETERMINATION OF CONFORMANCE WITH ZONING REGULATIONS.

No.	Revision	Date	Apprvd.
2	SPECIAL PERMIT REVISIONS	5/14/13	CCL
1	RESPONSE TO COMMENTS	4/16/13	CCL

Designed by JDT	Drawn by JDT	Checked by CCL
CAD checked by CCL	Approved by CCL	
Scale 1"=40'	Date November 12, 2012	

Project Title
Danforth Green

Framingham, Massachusetts

Issued for
Permitting

NOT FOR CONSTRUCTION

Drawing Title
Layout and Materials Plan

Drawing Number
C-3.2

Sheet 4 of 27

Project Number
12004.00

12004.00-LM.DWG

VHB

Vanasse Hangen Brustlin, Inc.

Transportation
Land Development
Environmental Services

Union Station, Suite 219
2 Washington Square
Worcester, Massachusetts 01604
508.752.1001 • FAX 508.752.1276

PLAN INTENT:
THIS PLAN DEPICTS THE PROJECT AT A LEVEL OF DETAIL SUFFICIENT TO MEET THE REQUIREMENTS OF PERMITTING BUT IS NOT INTENDED TO INCLUDE DETAILS SUFFICIENT FOR CONSTRUCTION.

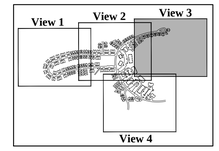

Sheet Key

1" = 1200'

FRAMINGHAM PLANNING BOARD
DEFINITIVE DEVELOPMENT PLAN APPROVALS

THIS ENDORSEMENT OF THE PLANNING BOARD SHOULD NOT BE CONSTRUED TO BE DETERMINATION OF CONFORMANCE WITH ZONING REGULATIONS.

No.	Revision	Date	Appvd.
2	SPECIAL PERMIT REVISIONS	5/14/13	CCL
1	RESPONSE TO COMMENTS	4/16/13	CCL

Designed by JDT | Drawn by JDT | Checked by CCL
CAD checked by CCL | Approved by CCL
Scale 1"=40' | Date November 12, 2012

Project Title

Danforth Green

Framingham, Massachusetts

Issued for

Permitting

NOT FOR CONSTRUCTION

Drawing Title

Layout and
Materials Plan

COMMONWEALTH OF MASSACHUSETTS
CRAIG C. LIZOTTE
CIVIL
No. 39931
REGISTERED PROFESSIONAL ENGINEER

Drawing Number

C-3.3

Sheet 5 of 27

Project Number
12004.00

12004.00-LM.DWG

Saved Tuesday, May 14, 2013 1:22:07 PM BGESNER Plotted Tuesday, May 14, 2013 1:46:12 PM Gesner, Brittany

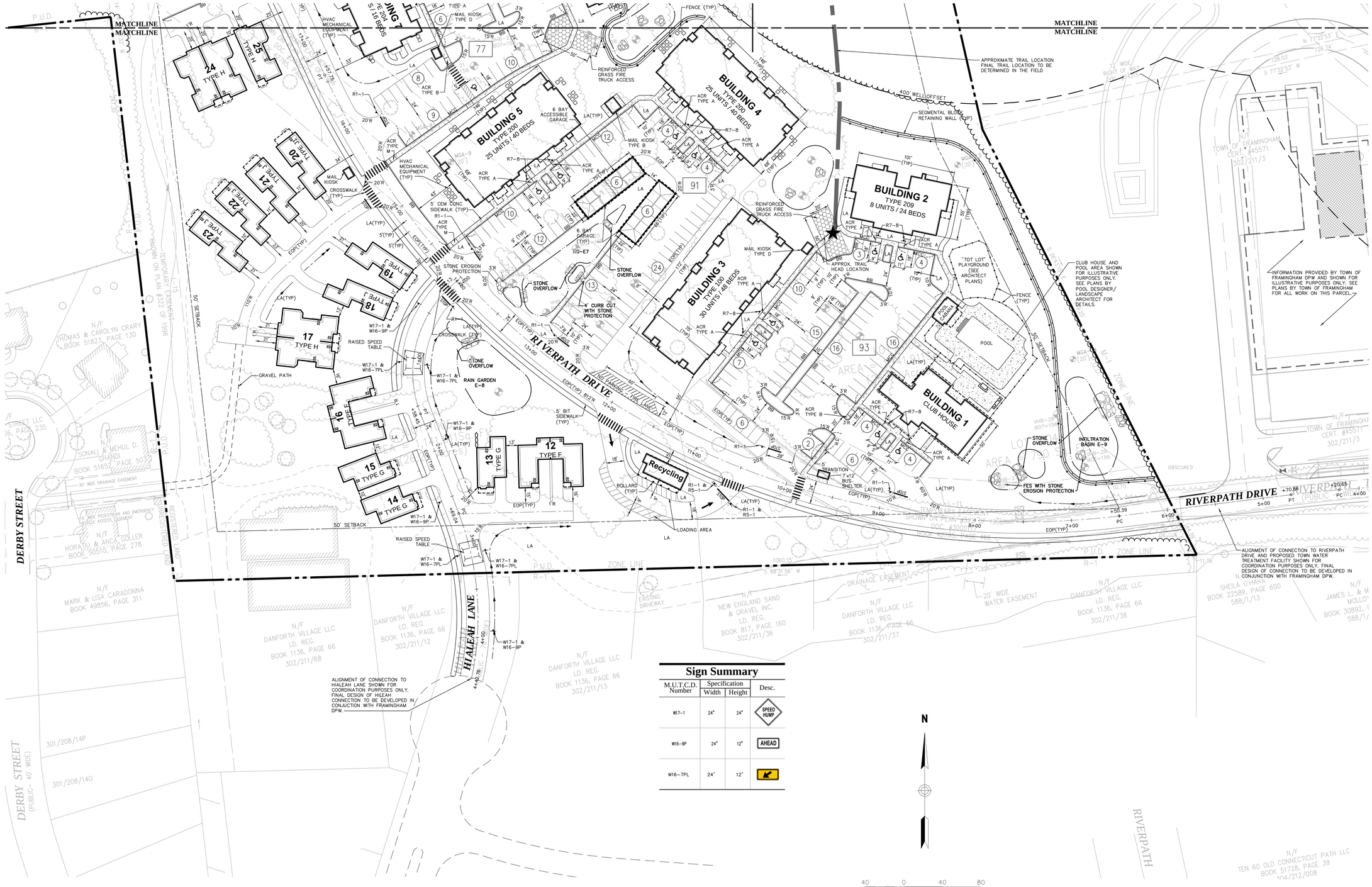

Sign Summary

M.U.T.C.D. Number	Specification		Desc.
	Width	Height	
W17-1	24"	24"	SPEED HUMP
W16-9P	24"	12"	AHEAD
W16-7PL	24"	12"	

VHB
Vanasse Hangen Brustlin, Inc.
Transportation
Land Development
Environmental Services
Union Station, Suite 219
2 Washington Square
Worcester, Massachusetts 01604
508.752.1001 • FAX 508.752.1276

PLAN INTENT:
THIS PLAN DEPICTS THE PROJECT AT A LEVEL OF DETAIL SUFFICIENT TO MEET THE REQUIREMENTS OF PERMITTING BUT IS NOT INTENDED TO INCLUDE DETAILS SUFFICIENT FOR CONSTRUCTION.

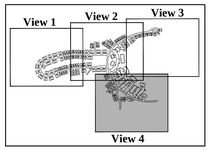

Sheet Key
1" = 1200'

FRAMINGHAM PLANNING BOARD
DEFINITIVE DEVELOPMENT PLAN APPROVALS

THIS ENDORSEMENT OF THE PLANNING BOARD SHOULD NOT BE CONSTRUED TO BE DETERMINATION OF CONFORMANCE WITH ZONING REGULATIONS.

No.	Revision	Date	Appvd.
2	SPECIAL PERMIT REVISIONS	5/14/13	CCL
1	RESPONSE TO COMMENTS	4/16/13	CCL

Designed by JDT | Drawn by JDT | Checked by CCL
CAD checked by CCL | Approved by CCL
Scale 1"=40' | Date November 12, 2012

Project Title
Danforth Green

Framingham, Massachusetts
Issued for
Permitting

NOT FOR CONSTRUCTION

Drawing Title
Layout and Materials Plan

COMMONWEALTH OF MASSACHUSETTS
CRAIG C. LIZOTTE
NO. 39887
REGISTERED PROFESSIONAL ENGINEER

Drawing Number
C-3.4
Sheet 6 of 27
Project Number
12004.00

\\VHB\PROJ\WORCESTER\12004.00\CAD\LD\PLANSET\12004.00-GD

Notes:

1. PROPOSED SUPPLEMENTAL GEOTECHNICAL INVESTIGATIONS SHOWN HEREON TO BE COMPLETED PRIOR TO CONSTRUCTION. DATA TO BE USED TO CONFIRM/UPDATE DESIGN.
2. ALL ROOF RUNOFF TO BE CONNECTED TO INFILTRATION AREAS AND/OR DRY WELLS AS SHOWN HEREON AND IN THE DETAILS.

VHB

Vanasse Hangen Brustlin, Inc.

Transportation
Land Development
Environmental Services

Union Station, Suite 219
2 Washington Square
Worcester, Massachusetts 01604
508.752.1001 • FAX 508.752.1276

PLAN INTENT:
THIS PLAN DEPICTS THE PROJECT AT A LEVEL OF DETAIL SUFFICIENT TO MEET THE REQUIREMENTS OF PERMITTING BUT IS NOT INTENDED TO INCLUDE DETAILS SUFFICIENT FOR CONSTRUCTION.

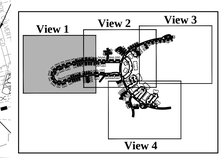

Sheet Key
1" = 1200'

FRAMINGHAM PLANNING BOARD
DEFINITIVE DEVELOPMENT PLAN APPROVALS

THIS ENDORSEMENT OF THE PLANNING BOARD SHOULD NOT BE CONSTRUED TO BE DETERMINATION OF CONFORMANCE WITH ZONING REGULATIONS.

No.	Revision	Date	Apprvd.
2	SPECIAL PERMIT REVISIONS	5/14/13	CCL
1	RESPONSE TO COMMENTS	4/16/13	CCL

Designed by JWD	Drawn by REW	Checked by CCL
CAD checked by JWD	Approved by CCL	
Scale 1"=40'	Date November 12, 2012	

Project Title
Danforth Green

Framingham, Massachusetts

Issued for
Permitting

NOT FOR CONSTRUCTION

Drawing Title
Grading, Drainage, and Erosion Control Plan

COMMONWEALTH OF MASSACHUSETTS CRAIG C. LIZOTTE CIVIL No. 39817 REGISTERED PROFESSIONAL ENGINEER

Drawing Number
C-4.1

Sheet 7 of 27

Project Number
12004.00

12004.00-GD.DWG

Saved Tuesday, May 14, 2013 1:26:17 PM BGESNER Plotted Tuesday, May 14, 2013 1:47:22 PM Gesner, Brittany

\\VHB\PROJ\WORCESTER\12004.00\CAD\LD\PLANSET\12004.00-GD

Notes:

1. PROPOSED SUPPLEMENTAL GEOTECHNICAL INVESTIGATIONS SHOWN HEREON TO BE COMPLETED PRIOR TO CONSTRUCTION. DATA TO BE USED TO CONFIRM/UPDATE DESIGN.
2. ALL ROOF RUNOFF TO BE CONNECTED TO INFILTRATION AREAS AND/OR DRY WELLS AS SHOWN HEREON AND IN THE DETAILS.

VHB

Vanasse Hangen Brustlin, Inc.

Transportation
Land Development
Environmental Services

Union Station, Suite 219
2 Washington Square
Worcester, Massachusetts 01604
508.752.1001 • FAX 508.752.1276

PLAN INTENT:
THIS PLAN DEPICTS THE PROJECT AT A LEVEL OF DETAIL SUFFICIENT TO MEET THE REQUIREMENTS OF PERMITTING BUT IS NOT INTENDED TO INCLUDE DETAILS SUFFICIENT FOR CONSTRUCTION.

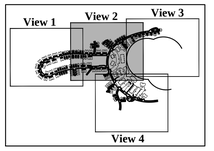

Sheet Key

1" = 1200'

FRAMINGHAM PLANNING BOARD
DEFINITIVE DEVELOPMENT PLAN APPROVALS

THIS ENDORSEMENT OF THE PLANNING BOARD SHOULD NOT BE CONSTRUED TO BE DETERMINATION OF CONFORMANCE WITH ZONING REGULATIONS.

No.	Revision	Date	Appvd.
3	SPECIAL PERMIT REVISIONS	5/14/13	CCL
2	RESPONSE TO COMMENTS	4/16/13	CCL
1	ADD GRASS SWALE	1/22/13	

Designed by JWD	Drawn by REW	Checked by CCL
CAD checked by JWD	Approved by CCL	
Scale 1"=40'	Date November 12, 2012	

Project Title

Danforth Green

Framingham, Massachusetts

Issued for

Permitting

NOT FOR CONSTRUCTION

Drawing Title

Grading, Drainage, and Erosion Control Plan

COMMONWEALTH OF MASSACHUSETTS
CRAIG C. LIZOTTE
CIVIL
No. 39811
REGISTERED PROFESSIONAL ENGINEER

Drawing Number

C-4.2

Sheet 8 of 27

Project Number

12004.00

12004.00-GD.DWG

\\VHB\PROJ\WORCESTER\12004.00\CAD\LD\PLANSET\12004.00-GD
Saved Tuesday, May 14, 2013 1:26:17 PM BGESNER Plotted Tuesday, May 14, 2013 1:48:31 PM Gesner, Brittany

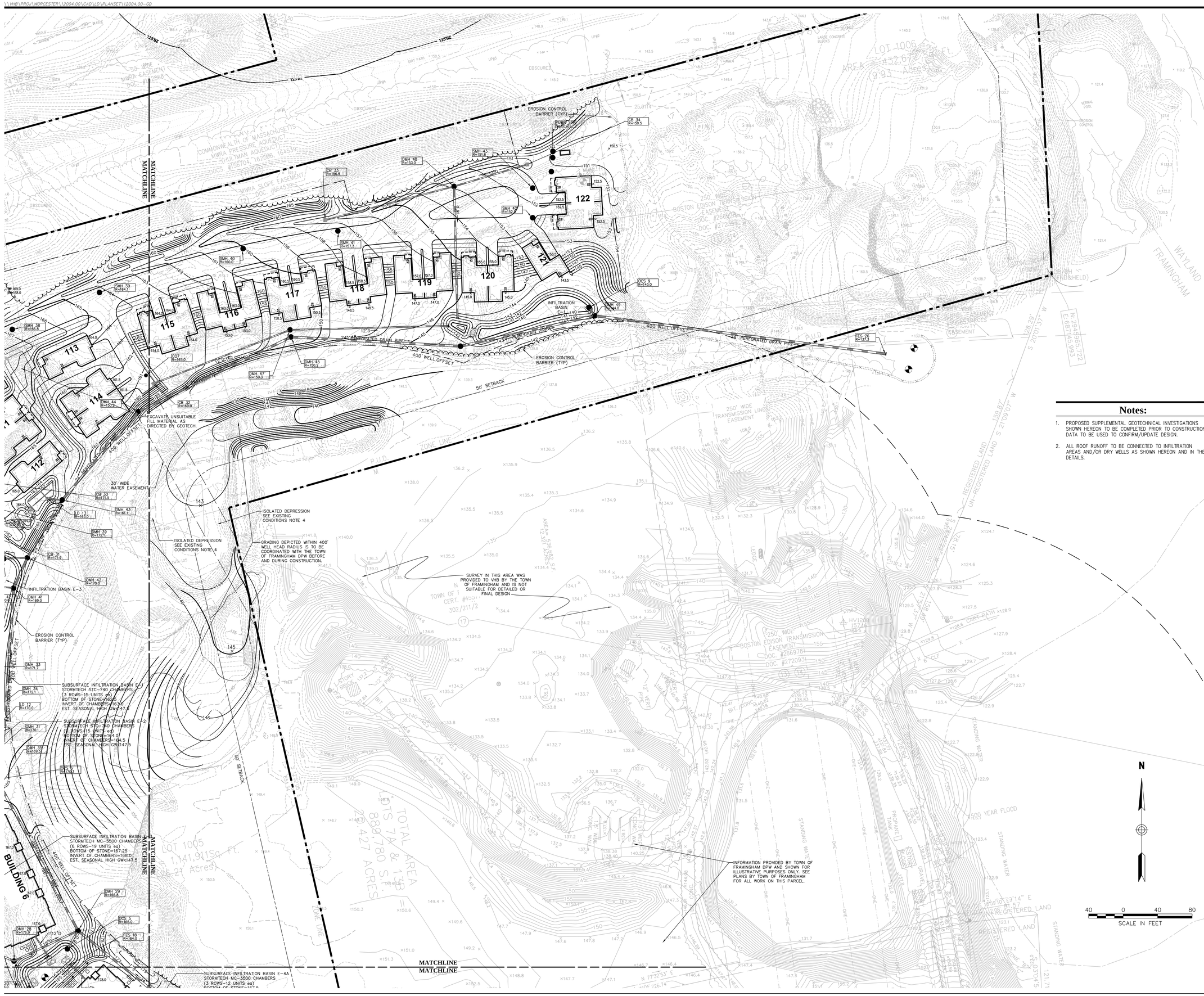

VHB
Vanasse Hangen Brustlin, Inc.
Transportation
Land Development
Environmental Services
Union Station, Suite 219
2 Washington Square
Worcester, Massachusetts 01604
508.752.1001 • FAX 508.752.1276

PLAN INTENT:
THIS PLAN DEPICTS THE PROJECT AT A LEVEL OF DETAIL SUFFICIENT TO MEET THE REQUIREMENTS OF PERMITTING BUT IS NOT INTENDED TO INCLUDE DETAILS SUFFICIENT FOR CONSTRUCTION.

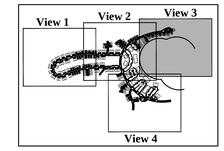

Sheet Key
1" = 1200'

Notes:

1. PROPOSED SUPPLEMENTAL GEOTECHNICAL INVESTIGATIONS SHOWN HEREON TO BE COMPLETED PRIOR TO CONSTRUCTION. DATA TO BE USED TO CONFIRM/UPDATE DESIGN.
2. ALL ROOF RUNOFF TO BE CONNECTED TO INFILTRATION AREAS AND/OR DRY WELLS AS SHOWN HEREON AND IN THE DETAILS.

FRAMINGHAM PLANNING BOARD
DEFINITIVE DEVELOPMENT PLAN APPROVALS

THIS ENDORSEMENT OF THE PLANNING BOARD SHOULD NOT BE CONSTRUED TO BE DETERMINATION OF CONFORMANCE WITH ZONING REGULATIONS.

No.	Revision	Date	Appvd.
2	SPECIAL PERMIT REVISIONS	5/14/13	CCL
1	RESPONSE TO COMMENTS	4/16/13	CCL

Designed by JWD | Drawn by REW | Checked by CCL
CAD checked by JWD | Approved by CCL
Scale 1"=40' | Date November 12, 2012

Project Title
Danforth Green

Framingham, Massachusetts
Issued for
Permitting

NOT FOR CONSTRUCTION

Drawing Title
Grading, Drainage, and Erosion Control Plan

COMMONWEALTH OF MASSACHUSETTS — CRAIG C. LIZOTTE — CIVIL — No. 50013 — REGISTERED PROFESSIONAL ENGINEER

Drawing Number
C-4.3
Sheet 9 of 27
Project Number
12004.00

12004.00-GD.DWG

\\VHB\PROJ\WORCESTER\12004.00\CAD\LD\PLANSET\12004.00-GD
Saved Tuesday, May 14, 2013 1:26:17 PM BIGSNER Plotted Tuesday, May 14, 2013 1:49:04 PM Gesner, Brittany

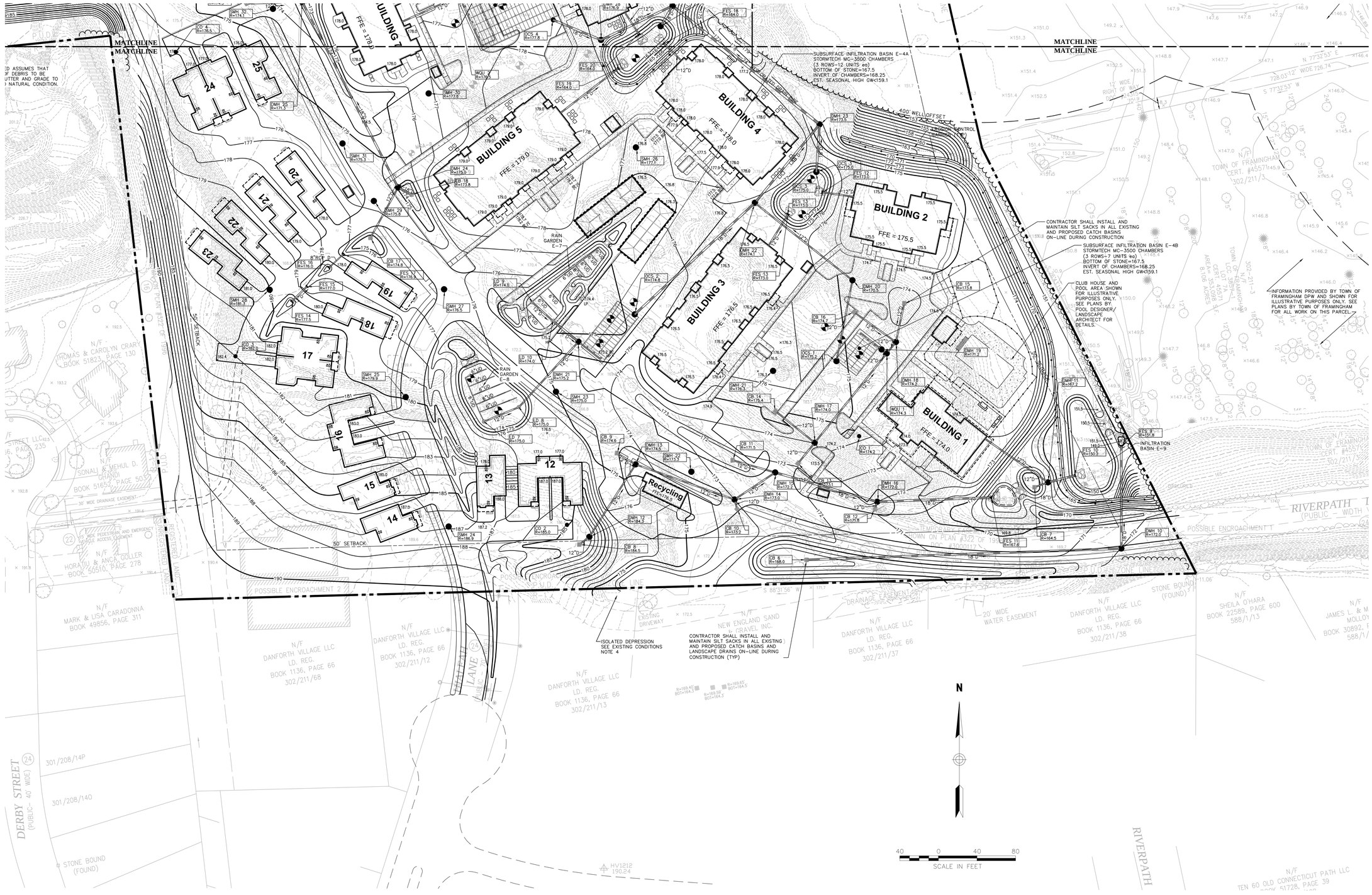

Notes:

1. PROPOSED SUPPLEMENTAL GEOTECHNICAL INVESTIGATIONS SHOWN HEREON TO BE COMPLETED PRIOR TO CONSTRUCTION. DATA TO BE USED TO CONFIRM/UPDATE DESIGN.
2. ALL ROOF RUNOFF TO BE CONNECTED TO INFILTRATION AREAS AND/OR DRY WELLS AS SHOWN HEREON AND IN THE DETAILS.

VHB
Vanasse Hangen Brustlin, Inc.
Transportation
Land Development
Environmental Services
Union Station, Suite 219
2 Washington Square
Worcester, Massachusetts 01604
508.752.1001 • FAX 508.752.1276

PLAN INTENT:
THIS PLAN DEPICTS THE PROJECT AT A LEVEL OF DETAIL SUFFICIENT TO MEET THE REQUIREMENTS OF PERMITTING BUT IS NOT INTENDED TO INCLUDE DETAILS SUFFICIENT FOR CONSTRUCTION.

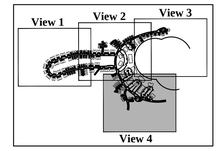

Sheet Key
1" = 1200'

FRAMINGHAM PLANNING BOARD
DEFINITIVE DEVELOPMENT PLAN APPROVALS

THIS ENDORSEMENT OF THE PLANNING BOARD SHOULD NOT BE CONSTRUED TO BE DETERMINATION OF CONFORMANCE WITH ZONING REGULATIONS.

No.	Revision	Date	Appvd.
2	SPECIAL PERMIT REVISIONS	5/14/13	CCL
1	RESPONSE TO COMMENTS	4/16/13	CCL

Designed by JWD | Drawn by REW | Checked by CCL
CAD checked by JWD | Approved by CCL
Scale 1"=40' | Date November 12, 2012

Project Title
Danforth Green

Framingham, Massachusetts
Issued for
Permitting

NOT FOR CONSTRUCTION

Drawing Title
Grading, Drainage, and Erosion Control Plan

COMMONWEALTH OF MASSACHUSETTS CRAIG C. LIZOTTE CIVIL No. 39019 REGISTERED PROFESSIONAL ENGINEER

Drawing Number
C-4.4
Sheet 10 of 27
Project Number
12004.00

12004.00-GD.DWG

Sewer Flow Summary Chart

Description	Size
ESTIMATED STANDARD SEWER FLOW	110 GALLONS/DAY/BEDROOM

Use	Required
CLUBHOUSE / LEASING OFFICE	1 CLUBHOUSE = 400 GPD
MULTI-FAMILY UNITS & COTTAGES FOR SALE	417 BEDROOMS X 110 GPD / BEDROOM = 45,870 GPD
APARTMENTS FOR RENT	303 BEDROOMS X 110 GPD / BEDROOM = 33,330 GPD
TOTAL	TOTAL = 79,600 GPD

Notes:

1. ELECTRICAL MANHOLES (EMH) AND TEL/DATA MANHOLES (TMH) SHOWN FOR ILLUSTRATIVE PURPOSES ONLY. FINAL LOCATIONS TO BE DETERMINED BY UTILITY COMPANY. INDIVIDUAL SERVICE CONNECTIONS TO EACH UNIT ARE NOT SHOWN BUT WILL BE PROVIDED.
2. SIZING OF WATER MAINS AND BUILDING WATER CONNECTIONS TO BE VERIFIED BY PROJECT MECHANICAL ENGINEER PRIOR TO CONSTRUCTION.
3. GAS MAIN LOCATIONS SHOWN FOR ILLUSTRATIVE PURPOSES ONLY. FINAL SIZE AND LOCATION TO BE DETERMINED BY PROVIDER.
4. SIZING OF FORCE MAIN TO BE VERIFIED UPON FINAL PUMP SELECTION.
5. THE WATER MAINS AND APPURTENANCES SHALL BE PRESSURE TESTED, DISINFECTED, AND FLUSHED IN ACCORDANCE WITH TOWN OF FRAMINGHAM STANDARDS AND PROJECT SPECIFICATIONS. DEPARTMENT OF PUBLIC WORKS PERSONNEL SHALL WITNESS THIS TESTING AND BE PROVIDED TEST DOCUMENTATION.
6. THE SEWER MAINS AND MANHOLES SHALL BE PRESSURE/VACUUM TESTED, MANDREL TESTED, AND VIDEO INSPECTED IN ACCORDANCE WITH TOWN OF FRAMINGHAM STANDARDS AND PROJECT SPECIFICATIONS. DEPARTMENT OF PUBLIC WORKS PERSONNEL SHALL WITNESS THIS TESTING AND BE PROVIDED TEST DOCUMENTATION.
7. WHEN A SEWER PIPE CROSSES ABOVE OR BELOW A WATER PIPE, THE CONTRACTOR SHALL COMPLY WITH THE FOLLOWING PROCEDURES:
   - 7.1. HORIZONTAL SEPARATION: WHENEVER POSSIBLE SEWERS SHALL BE LAID AT A MINIMUM AT LEAST 10 FEET, HORIZONTALLY, FROM ANY EXISTING OR PROPOSED WATER MAIN. SHOULD LOCAL CONDITIONS PREVENT A LATERAL SEPARATION OF 10 FEET, A SEWER MAY BE LAID CLOSER THAN 10 FEET TO A WATER MAIN IF:
     - 7.1.1. IT IS LAID IN A SEPARATE TRENCH, OR IF;
     - 7.1.2. IT IS LAID IN THE SAME TRENCH WITH THE WATER MAINS LOCATED AT ONE SIDE ON A BENCH OF UNDISTURBED EARTH, AND IF;
     - 7.1.3. IN EITHER CASE, THE ELEVATIONS OF THE TOP (CROWN) OF THE SEWER IS AT LEAST 18 INCHES BELOW THE BOTTOM (INVERT) OF THE WATER MAIN.
   - 7.2. VERTICAL SEPARATION: WHENEVER SEWERS MUST CROSS UNDER WATER MAINS, THE SEWERS SHALL BE LAID AT SUCH AN ELEVATION THAT THE TOP OF THE SEWER IS AT LEAST 18 INCHES BELOW THE BOTTOM OF THE WATER MAIN. WHEN THE ELEVATION OF THE SEWER CANNOT BE VARIED TO MEET THE ABOVE REQUIREMENTS, THE WATER MAIN SHALL BE RELOCATED TO PROVIDE THIS SEPARATION OR RECONSTRUCTED WITH MECHANICAL-JOINT PIPE FOR A DISTANCE OF 10 FEET ON EACH SIDE OF THE SEWER. ONE FULL LENGTH OF WATER MAIN SHOULD BE CENTERED OVER THE SEWER SO THAT BOTH JOINTS WILL BE AS FAR FROM THE SEWER AS POSSIBLE.
   - 7.3. WHEN IT IS IMPOSSIBLE TO OBTAIN HORIZONTAL AND/OR VERTICAL SEPARATION AS STIPULATED ABOVE, BOTH THE WATER MAIN AND SEWER SHALL BE CONSTRUCTED OF MECHANICAL-JOINT CEMENT LINED DUCTILE IRON PIPE OR OTHER EQUIVALENT BASED ON WATERTIGHTNESS AND STRUCTURAL SOUNDNESS. BOTH PIPES SHALL BE PRESSURE TESTED BY AN APPROVED METHOD TO ASSURE WATERTIGHTNESS OR BOTH PIPES SHALL BE ENCASED IN CONCRETE.
8. FINAL LOCATION OF SHALLOW UNDERGROUND UTILITIES (GAS & ELECTRIC) TO BE ADJUSTED IN THE FIELD TO AVOID CONFLICTS WITH LANDSCAPE PLANTINGS.
9. ALL ROOF RUNOFF TO BE CONNECTED TO INFILTRATION AREAS AND/OR DRY WELLS AS SHOWN HEREON AND IN THE DETAILS.

VHB
Vanasse Hangen Brustlin, Inc.
Transportation
Land Development
Environmental Services

Union Station, Suite 219
2 Washington Square
Worcester, Massachusetts 01604
508.752.1001 • FAX 508.752.1276

PLAN INTENT:
THIS PLAN DEPICTS THE PROJECT AT A LEVEL OF DETAIL SUFFICIENT TO MEET THE REQUIREMENTS OF PERMITTING BUT IS NOT INTENDED TO INCLUDE DETAILS SUFFICIENT FOR CONSTRUCTION.

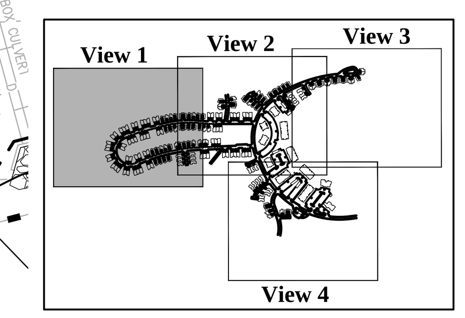

Sheet Key
1" = 1200'

FRAMINGHAM PLANNING BOARD
DEFINITIVE DEVELOPMENT PLAN APPROVALS

THIS ENDORSEMENT OF THE PLANNING BOARD SHOULD NOT BE CONSTRUED TO BE DETERMINATION OF CONFORMANCE WITH ZONING REGULATIONS.

No.	Revision	Date	Appvd.
2	SPECIAL PERMIT REVISIONS	5/14/13	CCL
1	RESPONSE TO COMMENTS	4/16/13	CCL

Designed by JWD | Drawn by BMG | Checked by CCL
CAD checked by JWD | Approved by CCL
Scale 1"=40' | Date November 12, 2012

Project Title
Danforth Green

Framingham, Massachusetts

Issued for
Permitting

NOT FOR CONSTRUCTION

Drawing Title
Utility Plan

Drawing Number
C-5.1

COMMONWEALTH OF MASSACHUSETTS CRAIG C. LIZOTTE CIVIL No. 39811 REGISTERED PROFESSIONAL ENGINEER

Sheet 11 of 27

Project Number
12004.00

\\VHB\PROJ\WORCESTER\12004.00\CAD\LD\PLANSET\12004.00-UT

Saved Tuesday, May 14, 2013 1:31:02 PM BIGSNER Plotted Tuesday, May 14, 2013 1:50:52 PM Geiner, Brittany

N

40 0 40 80

SCALE IN FEET

Notes:

1. ELECTRICAL MANHOLES (EMH) AND TEL/DATA MANHOLES (TMH) SHOWN FOR ILLUSTRATIVE PURPOSES ONLY. FINAL LOCATIONS TO BE DETERMINED BY UTILITY COMPANY. INDIVIDUAL SERVICE CONNECTIONS TO EACH UNIT ARE NOT SHOWN BUT WILL BE PROVIDED.
2. SIZING OF WATER MAINS AND BUILDING WATER CONNECTIONS TO BE VERIFIED BY PROJECT MECHANICAL ENGINEER PRIOR TO CONSTRUCTION.
3. GAS MAIN LOCATIONS SHOWN FOR ILLUSTRATIVE PURPOSES ONLY. FINAL SIZE AND LOCATION TO BE DETERMINED BY PROVIDER.
4. SIZING OF FORCE MAIN TO BE VERIFIED UPON FINAL PUMP SELECTION.
5. THE WATER MAINS AND APPURTENANCES SHALL BE PRESSURE TESTED, DISINFECTED, AND FLUSHED IN ACCORDANCE WITH TOWN OF FRAMINGHAM STANDARDS AND PROJECT SPECIFICATIONS. DEPARTMENT OF PUBLIC WORKS PERSONNEL SHALL WITNESS THIS TESTING AND BE PROVIDED TEST DOCUMENTATION.
6. THE SEWER MAINS AND MANHOLES SHALL BE PRESSURE/VACUUM TESTED, MANDREL TESTED, AND VIDEO INSPECTED IN ACCORDANCE WITH TOWN OF FRAMINGHAM STANDARDS AND PROJECT SPECIFICATIONS. DEPARTMENT OF PUBLIC WORKS PERSONNEL SHALL WITNESS THIS TESTING AND BE PROVIDED TEST DOCUMENTATION.
7. WHEN A SEWER PIPE CROSSES ABOVE OR BELOW A WATER PIPE, THE CONTRACTOR SHALL COMPLY WITH THE FOLLOWING PROCEDURES:
   - 7.1. HORIZONTAL SEPARATION: WHENEVER POSSIBLE SEWERS SHALL BE LAID AT A MINIMUM AT LEAST 10 FEET, HORIZONTALLY, FROM ANY EXISTING OR PROPOSED WATER MAIN. SHOULD LOCAL CONDITIONS PREVENT A LATERAL SEPARATION OF 10 FEET, A SEWER MAY BE LAID CLOSER THAN 10 FEET TO A WATER MAIN IF:
     - 7.1.1. IT IS LAID IN A SEPARATE TRENCH, OR IF;
     - 7.1.2. IT IS LAID IN THE SAME TRENCH WITH THE WATER MAINS LOCATED AT ONE SIDE ON A BENCH OF UNDISTURBED EARTH, AND IF;
     - 7.1.3. IN EITHER CASE, THE ELEVATIONS OF THE TOP (CROWN) OF THE SEWER IS AT LEAST 18 INCHES BELOW THE BOTTOM (INVERT) OF THE WATER MAIN.
   - 7.2. VERTICAL SEPARATION: WHENEVER SEWERS MUST CROSS UNDER WATER MAINS, THE SEWERS SHALL BE LAID AT SUCH AN ELEVATION THAT THE TOP OF THE SEWER IS AT LEAST 18 INCHES BELOW THE BOTTOM OF THE WATER MAIN. WHEN THE ELEVATION OF THE SEWER CANNOT BE VARIED TO MEET THE ABOVE REQUIREMENTS, THE WATER MAIN SHALL BE RELOCATED TO PROVIDE THIS SEPARATION OR RECONSTRUCTED WITH MECHANICAL-JOINT PIPE FOR A DISTANCE OF 10 FEET ON EACH SIDE OF THE SEWER. ONE FULL LENGTH OF WATER MAIN SHOULD BE CENTERED OVER THE SEWER SO THAT BOTH JOINTS WILL BE AS FAR FROM THE SEWER AS POSSIBLE.
   - 7.3. WHEN IT IS IMPOSSIBLE TO OBTAIN HORIZONTAL AND/OR VERTICAL SEPARATION AS STIPULATED ABOVE, BOTH THE WATER MAIN AND SEWER SHALL BE CONSTRUCTED OF MECHANICAL-JOINT CEMENT LINED DUCTILE IRON PIPE OR OTHER EQUIVALENT BASED ON WATERTIGHTNESS AND STRUCTURAL SOUNDNESS. BOTH PIPES SHALL BE PRESSURE TESTED BY AN APPROVED METHOD TO ASSURE WATERTIGHTNESS OR BOTH PIPES SHALL BE ENCASED IN CONCRETE.
8. FINAL LOCATION OF SHALLOW UNDERGROUND UTILITIES (GAS & ELECTRIC) TO BE ADJUSTED IN THE FIELD TO AVOID CONFLICTS WITH LANDSCAPE PLANTINGS.
9. ALL ROOF RUNOFF TO BE CONNECTED TO INFILTRATION AREAS AND/OR DRY WELLS AS SHOWN HEREON AND IN THE DETAILS.

VHB

Vanasse Hangen Brustlin, Inc.

Transportation
Land Development
Environmental Services

Union Station, Suite 219
2 Washington Square
Worcester, Massachusetts 01604
508.752.1001 • FAX 508.752.1276

PLAN INTENT:
THIS PLAN DEPICTS THE PROJECT AT A LEVEL OF DETAIL SUFFICIENT TO MEET THE REQUIREMENTS OF PERMITTING BUT IS NOT INTENDED TO INCLUDE DETAILS SUFFICIENT FOR CONSTRUCTION.

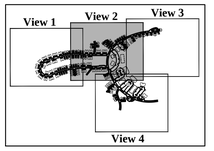

Sheet Key

1" = 1200'

FRAMINGHAM PLANNING BOARD
DEFINITIVE DEVELOPMENT PLAN APPROVALS

THIS ENDORSEMENT OF THE PLANNING BOARD SHOULD NOT BE CONSTRUED TO BE DETERMINATION OF CONFORMANCE WITH ZONING REGULATIONS.

No.	Revision	Date	Appvd
2	SPECIAL PERMIT REVISIONS	5/14/13	CCL
1	RESPONSE TO COMMENTS	4/16/13	CCL

Designed by JWD	Drawn by BMG	Checked by CCL	
CAD checked by JWD		Approved by CCL	
Scale 1"=40'		Date November 12, 2012	

Project Title

Danforth Green

Framingham, Massachusetts

Issued for

Permitting

NOT FOR CONSTRUCTION

Drawing Title

Utility Plan

COMMONWEALTH OF MASSACHUSETTS
CRAIG C. LIZOTTE
CIVIL
No. 39067
REGISTERED PROFESSIONAL ENGINEER

Drawing Number

C-5.2

Sheet 12 of 27

Project Number

12004.00

12004.00-UT.DWG

Saved Tuesday, May 14, 2013 1:31:02 PM BIZSNER Plotted Tuesday, May 14, 2013 1:51:18 PM Geiner, Brittany

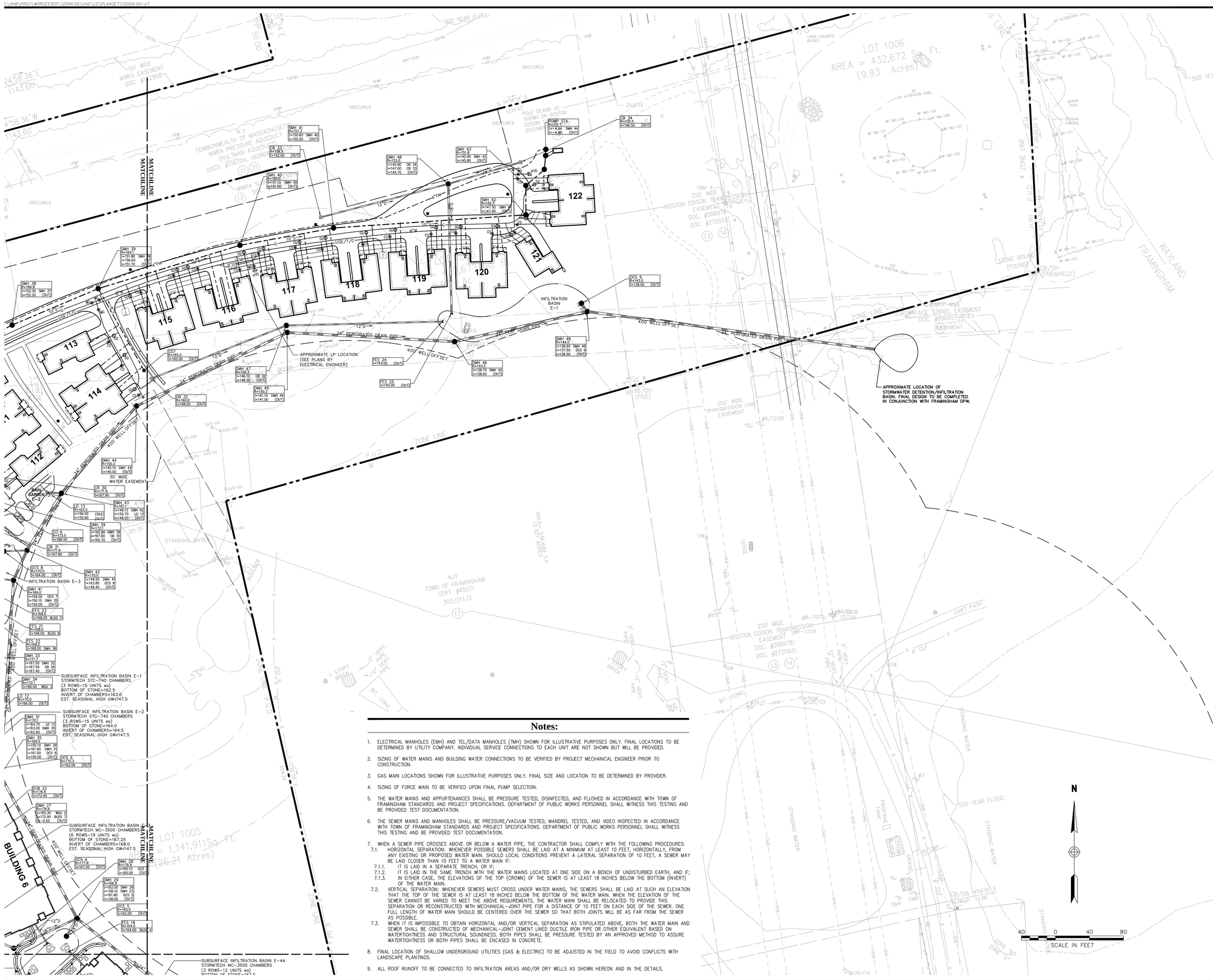

Notes:

1. ELECTRICAL MANHOLES (EMH) AND TEL/DATA MANHOLES (TMH) SHOWN FOR ILLUSTRATIVE PURPOSES ONLY. FINAL LOCATIONS TO BE DETERMINED BY UTILITY COMPANY. INDIVIDUAL SERVICE CONNECTIONS TO EACH UNIT ARE NOT SHOWN BUT WILL BE PROVIDED.
2. SIZING OF WATER MAINS AND BUILDING WATER CONNECTIONS TO BE VERIFIED BY PROJECT MECHANICAL ENGINEER PRIOR TO CONSTRUCTION.
3. GAS MAIN LOCATIONS SHOWN FOR ILLUSTRATIVE PURPOSES ONLY. FINAL SIZE AND LOCATION TO BE DETERMINED BY PROVIDER.
4. SIZING OF FORCE MAIN TO BE VERIFIED UPON FINAL PUMP SELECTION.
5. THE WATER MAINS AND APPURTENANCES SHALL BE PRESSURE TESTED, DISINFECTED, AND FLUSHED IN ACCORDANCE WITH TOWN OF FRAMINGHAM STANDARDS AND PROJECT SPECIFICATIONS. DEPARTMENT OF PUBLIC WORKS PERSONNEL SHALL WITNESS THIS TESTING AND BE PROVIDED TEST DOCUMENTATION.
6. THE SEWER MAINS AND MANHOLES SHALL BE PRESSURE/VACUUM TESTED, MANDREL TESTED, AND VIDEO INSPECTED IN ACCORDANCE WITH TOWN OF FRAMINGHAM STANDARDS AND PROJECT SPECIFICATIONS. DEPARTMENT OF PUBLIC WORKS PERSONNEL SHALL WITNESS THIS TESTING AND BE PROVIDED TEST DOCUMENTATION.
7. WHEN A SEWER PIPE CROSSES ABOVE OR BELOW A WATER PIPE, THE CONTRACTOR SHALL COMPLY WITH THE FOLLOWING PROCEDURES:
   - 7.1. HORIZONTAL SEPARATION: WHENEVER POSSIBLE SEWERS SHALL BE LAID AT A MINIMUM AT LEAST 10 FEET, HORIZONTALLY, FROM ANY EXISTING OR PROPOSED WATER MAIN. SHOULD LOCAL CONDITIONS PREVENT A LATERAL SEPARATION OF 10 FEET, A SEWER MAY BE LAID CLOSER THAN 10 FEET TO A WATER MAIN IF:
     - 7.1.1. IT IS LAID IN A SEPARATE TRENCH, OR IF;
     - 7.1.2. IT IS LAID IN THE SAME TRENCH WITH THE WATER MAINS LOCATED AT ONE SIDE ON A BENCH OF UNDISTURBED EARTH, AND IF;
     - 7.1.3. IN EITHER CASE, THE ELEVATIONS OF THE TOP (CROWN) OF THE SEWER IS AT LEAST 18 INCHES BELOW THE BOTTOM (INVERT) OF THE WATER MAIN.
   - 7.2. VERTICAL SEPARATION: WHENEVER SEWERS MUST CROSS UNDER WATER MAINS, THE SEWERS SHALL BE LAID AT SUCH AN ELEVATION THAT THE TOP OF THE SEWER IS AT LEAST 18 INCHES BELOW THE BOTTOM OF THE WATER MAIN. WHEN THE ELEVATION OF THE SEWER CANNOT BE VARIED TO MEET THE ABOVE REQUIREMENTS, THE WATER MAIN SHALL BE RELOCATED TO PROVIDE THIS SEPARATION OR RECONSTRUCTED WITH MECHANICAL-JOINT PIPE FOR A DISTANCE OF 10 FEET ON EACH SIDE OF THE SEWER. ONE FULL LENGTH OF WATER MAIN SHOULD BE CENTERED OVER THE SEWER SO THAT BOTH JOINTS WILL BE AS FAR FROM THE SEWER AS POSSIBLE.
   - 7.3. WHEN IT IS IMPOSSIBLE TO OBTAIN HORIZONTAL AND/OR VERTICAL SEPARATION AS STIPULATED ABOVE, BOTH THE WATER MAIN AND SEWER SHALL BE CONSTRUCTED OF MECHANICAL-JOINT CEMENT LINED DUCTILE IRON PIPE OR OTHER EQUIVALENT BASED ON WATERTIGHTNESS AND STRUCTURAL SOUNDNESS. BOTH PIPES SHALL BE PRESSURE TESTED BY AN APPROVED METHOD TO ASSURE WATERTIGHTNESS OR BOTH PIPES SHALL BE ENCASED IN CONCRETE.
8. FINAL LOCATION OF SHALLOW UNDERGROUND UTILITIES (GAS & ELECTRIC) TO BE ADJUSTED IN THE FIELD TO AVOID CONFLICTS WITH LANDSCAPE PLANTINGS.
9. ALL ROOF RUNOFF TO BE CONNECTED TO INFILTRATION AREAS AND/OR DRY WELLS AS SHOWN HEREON AND IN THE DETAILS.

VHB
Vanasse Hangen Brustlin, Inc.
Transportation
Land Development
Environmental Services
Union Station, Suite 219
2 Washington Square
Worcester, Massachusetts 01604
508.752.1001 • FAX 508.752.1276

PLAN INTENT:
THIS PLAN DEPICTS THE PROJECT AT A LEVEL OF DETAIL SUFFICIENT TO MEET THE REQUIREMENTS OF PERMITTING BUT IS NOT INTENDED TO INCLUDE DETAILS SUFFICIENT FOR CONSTRUCTION.

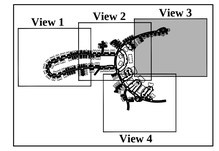

Sheet Key
1" = 1200'

FRAMINGHAM PLANNING BOARD
DEFINITIVE DEVELOPMENT PLAN APPROVALS

THIS ENDORSEMENT OF THE PLANNING BOARD SHOULD NOT BE CONSTRUED TO BE DETERMINATION OF CONFORMANCE WITH ZONING REGULATIONS.

No.	Revision	Date	Appvd
2	SPECIAL PERMIT REVISIONS	5/14/13	CCL
1	RESPONSE TO COMMENTS	4/16/13	CCL

Designed by JWD	Drawn by BMG	Checked by CCL	
CAD checked by JWD		Approved by CCL	
Scale 1"=40'		Date November 12, 2012	

Project Title
Danforth Green

Framingham, Massachusetts

Issued for
Permitting

NOT FOR CONSTRUCTION

Drawing Title
Utility Plan

COMMONWEALTH OF MASSACHUSETTS
CRAIG C. LIZOTTE
CIVIL
No. 49127
REGISTERED PROFESSIONAL ENGINEER

Drawing Number
C-5.3
Sheet 13 of 27
Project Number
12004.00

12004.00-UT.DWG

Saved Tuesday, May 14, 2013 1:31:02 PM BGESNER Plotted Tuesday, May 14, 2013 1:51:45 PM Gesner, Brittany

PLAN INTENT:
THIS PLAN DEPICTS THE PROJECT AT A LEVEL OF DETAIL SUFFICIENT TO MEET THE REQUIREMENTS OF PERMITTING BUT IS NOT INTENDED TO INCLUDE DETAILS SUFFICIENT FOR CONSTRUCTION.

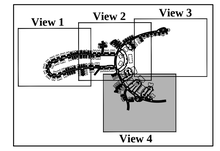

Sheet Key

1" = 1200'

Notes:

1. ELECTRICAL MANHOLES (EMH) AND TEL/DATA MANHOLES (TMH) SHOWN FOR ILLUSTRATIVE PURPOSES ONLY. FINAL LOCATIONS TO BE DETERMINED BY UTILITY COMPANY. INDIVIDUAL SERVICE CONNECTIONS TO EACH UNIT ARE NOT SHOWN BUT WILL BE PROVIDED.
2. SIZING OF WATER MAINS AND BUILDING WATER CONNECTIONS TO BE VERIFIED BY PROJECT MECHANICAL ENGINEER PRIOR TO CONSTRUCTION.
3. GAS MAIN LOCATIONS SHOWN FOR ILLUSTRATIVE PURPOSES ONLY. FINAL SIZE AND LOCATION TO BE DETERMINED BY PROVIDER.
4. SIZING OF FORCE MAIN TO BE VERIFIED UPON FINAL PUMP SELECTION.
5. THE WATER MAINS AND APPURTENANCES SHALL BE PRESSURE TESTED, DISINFECTED, AND FLUSHED IN ACCORDANCE WITH TOWN OF FRAMINGHAM STANDARDS AND PROJECT SPECIFICATIONS. DEPARTMENT OF PUBLIC WORKS PERSONNEL SHALL WITNESS THIS TESTING AND BE PROVIDED TEST DOCUMENTATION.
6. THE SEWER MAINS AND MANHOLES SHALL BE PRESSURE/VACUUM TESTED, MANDREL TESTED, AND VIDEO INSPECTED IN ACCORDANCE WITH TOWN OF FRAMINGHAM STANDARDS AND PROJECT SPECIFICATIONS. DEPARTMENT OF PUBLIC WORKS PERSONNEL SHALL WITNESS THIS TESTING AND BE PROVIDED TEST DOCUMENTATION.
7. WHEN A SEWER PIPE CROSSES ABOVE OR BELOW A WATER PIPE, THE CONTRACTOR SHALL COMPLY WITH THE FOLLOWING PROCEDURES:
   - 7.1. HORIZONTAL SEPARATION: WHENEVER POSSIBLE SEWERS SHALL BE LAID AT A MINIMUM AT LEAST 10 FEET, HORIZONTALLY, FROM ANY EXISTING OR PROPOSED WATER MAIN. SHOULD LOCAL CONDITIONS PREVENT A LATERAL SEPARATION OF 10 FEET, A SEWER MAY BE LAID CLOSER THAN 10 FEET TO A WATER MAIN IF:
     - 7.1.1. IT IS LAID IN A SEPARATE TRENCH, OR IF;
     - 7.1.2. IT IS LAID IN THE SAME TRENCH WITH THE WATER MAINS LOCATED AT ONE SIDE ON A BENCH OF UNDISTURBED EARTH, AND IF;
     - 7.1.3. IN EITHER CASE, THE ELEVATIONS OF THE TOP (CROWN) OF THE SEWER IS AT LEAST 18 INCHES BELOW THE BOTTOM (INVERT) OF THE WATER MAIN.
   - 7.2. VERTICAL SEPARATION: WHENEVER SEWERS MUST CROSS UNDER WATER MAINS, THE SEWERS SHALL BE LAID AT SUCH AN ELEVATION THAT THE TOP OF THE SEWER IS AT LEAST 18 INCHES BELOW THE BOTTOM OF THE WATER MAIN. WHEN THE ELEVATION OF THE SEWER CANNOT BE VARIED TO MEET THE ABOVE REQUIREMENTS, THE WATER MAIN SHALL BE RELOCATED TO PROVIDE THIS SEPARATION OR RECONSTRUCTED WITH MECHANICAL-JOINT PIPE FOR A DISTANCE OF 10 FEET ON EACH SIDE OF THE SEWER. ONE FULL LENGTH OF WATER MAIN SHOULD BE CENTERED OVER THE SEWER SO THAT BOTH JOINTS WILL BE AS FAR FROM THE SEWER AS POSSIBLE.
   - 7.3. WHEN IT IS IMPOSSIBLE TO OBTAIN HORIZONTAL AND/OR VERTICAL SEPARATION AS STIPULATED ABOVE, BOTH THE WATER MAIN AND SEWER SHALL BE CONSTRUCTED OF MECHANICAL-JOINT CEMENT LINED DUCTILE IRON PIPE OR OTHER EQUIVALENT BASED ON WATERTIGHTNESS AND STRUCTURAL SOUNDNESS. BOTH PIPES SHALL BE PRESSURE TESTED BY AN APPROVED METHOD TO ASSURE WATERTIGHTNESS OR BOTH PIPES SHALL BE ENCASED IN CONCRETE.
8. FINAL LOCATION OF SHALLOW UNDERGROUND UTILITIES (GAS & ELECTRIC) TO BE ADJUSTED IN THE FIELD TO AVOID CONFLICTS WITH LANDSCAPE PLANTINGS.
9. ALL ROOF RUNOFF TO BE CONNECTED TO INFILTRATION AREAS AND/OR DRY WELLS AS SHOWN HEREON AND IN THE DETAILS.

VHB
Vanasse Hangen Brustlin, Inc.
Transportation
Land Development
Environmental Services
Union Station, Suite 219
2 Washington Square
Worcester, Massachusetts 01604
508.752.1001 • FAX 508.752.1276

FRAMINGHAM PLANNING BOARD
DEFINITIVE DEVELOPMENT PLAN APPROVALS

THIS ENDORSEMENT OF THE PLANNING BOARD SHOULD NOT BE CONSTRUED TO BE DETERMINATION OF CONFORMANCE WITH ZONING REGULATIONS.

No.	Revision	Date	Appvd.
2	SPECIAL PERMIT REVISIONS	5/14/13	CCL
1	RESPONSE TO COMMENTS	4/16/13	CCL

Designed by JWD | Drawn by BMG | Checked by CCL
CAD checked by JWD | Approved by CCL
Scale 1"=40' | Date November 12, 2012

Project Title
Danforth Green

Framingham, Massachusetts
Issued for
Permitting

NOT FOR CONSTRUCTION

Drawing Title
Utility Plan

COMMONWEALTH OF MASSACHUSETTS
CRAIG C. LIZOTTE
CIVIL
No. 39917
REGISTERED PROFESSIONAL ENGINEER

Drawing Number
C-5.4
Sheet 14 of 27
Project Number
12004.00

12004.00-UT.DWG

Saved Tuesday, May 14, 2013 1:36:51 PM BGESNER Plotted Tuesday, May 14, 2013 1:52:41 PM Gesner, Brittany
\\VHB\PROJ\WORCESTER\12004.00\CAD\LD\PLANSET\12004.00-PROF

Notes:

1. WATER MAIN DEPICTED AT MINIMUM DEPTH OF 5'. CONTRACTOR TO VARY DEPTH AS REQUIRED TO ADDRESS CONFLICTS. ALL UTILITY CROSSINGS TO BE IN ACCORDANCE WITH DETAILS INCLUDED HEREIN, TOWN OF FRAMINGHAM STANDARDS, AND MA DEP STANDARDS.
2. PROFILES DO NOT DEPICT UNDERGROUND ELECTRIC, TELCOM, AND GAS AS DEPTH CAN EASILY VARY TO AVOID CONFLICTS.
3. SEE PLANS PREPARED BY VHB FOR OFF SITE SEWER FORCE MAIN AND GRAVITY SEWER ROUTING AS WELL AS OFF SITE ROADWAY IMPROVEMENTS.

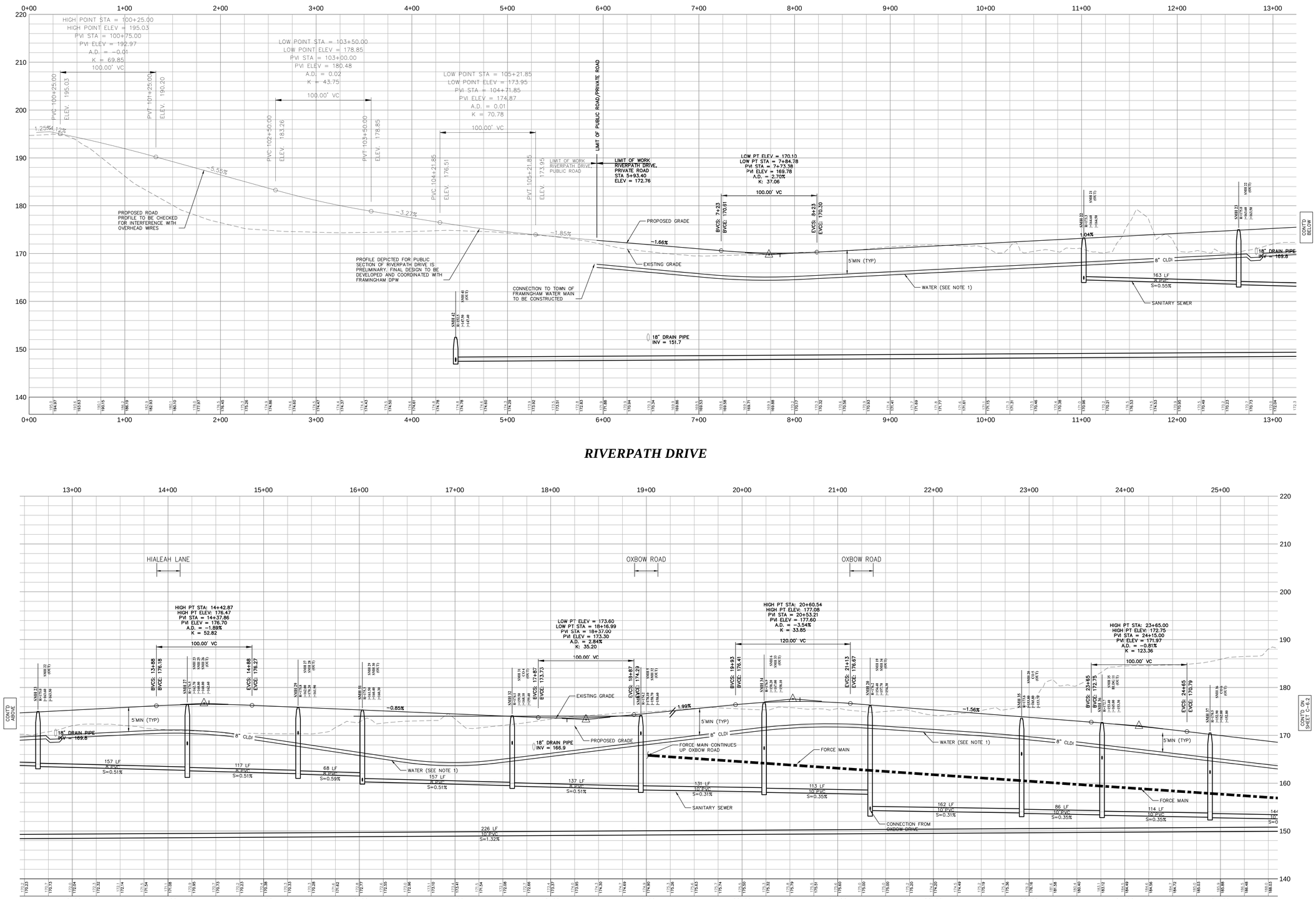

HORIZONTAL
40 0 40 80
8 0 8 16
VERTICAL
SCALE IN FEET

RIVERPATH DRIVE

RIVERPATH DRIVE

VHB
Vanasse Hangen Brustlin, Inc.
Transportation
Land Development
Environmental Services
Union Station, Suite 219
2 Washington Square
Worcester, Massachusetts 01604
508.752.1001 • FAX 508.752.1276

PLAN INTENT:
THIS PLAN DEPICTS THE PROJECT AT A LEVEL OF DETAIL SUFFICIENT TO MEET THE REQUIREMENTS OF PERMITTING BUT IS NOT INTENDED TO INCLUDE DETAILS SUFFICIENT FOR CONSTRUCTION.

FRAMINGHAM PLANNING BOARD
DEFINITIVE DEVELOPMENT PLAN APPROVALS

THIS ENDORSEMENT OF THE PLANNING BOARD SHOULD NOT BE CONSTRUED TO BE DETERMINATION OF CONFORMANCE WITH ZONING REGULATIONS.

No.	Revision	Date	Appvd.
2	SPECIAL PERMIT REVISIONS	5/14/13	CCL
1	RESPONSE TO COMMENTS	4/16/13	CCL

Designed by JWD | Drawn by BMG | Checked by CCL
CAD checked by JWD | Approved by CCL
Scale See Above | Date November 12, 2012

Project Title
Danforth Green

Framingham, Massachusetts

Issued for
Permitting

NOT FOR CONSTRUCTION

Drawing Title
Road Profiles

Drawing Number
C-6.1

Sheet of
15 27

Project Number
12004.00

COMMONWEALTH OF MASSACHUSETTS
CRAIG C. LIZOTTE
CIVIL
No 39811
REGISTERED PROFESSIONAL ENGINEER

12004.00-PROF.DWG

\\VHB\PROJ\WORCESTER\12004.00\CAD\LD\PLANSET\12004.00-PROF

Saved Tuesday, May 14, 2013 1:36:51 PM BGESNER Plotted Tuesday, May 14, 2013 1:53:15 PM Gesner, Brittany

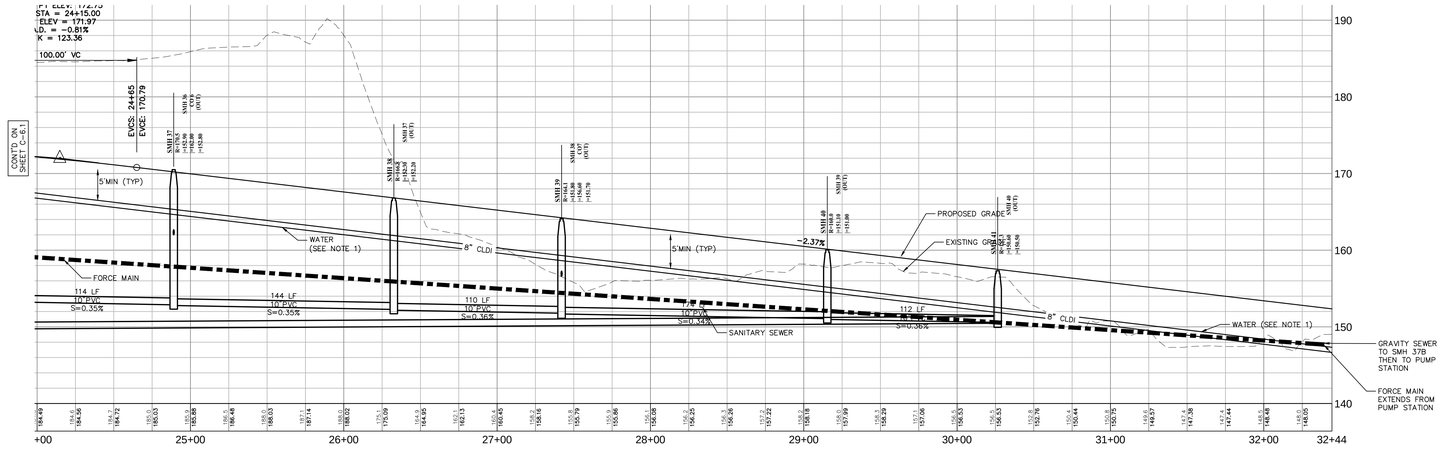

RIVERPATH DRIVE

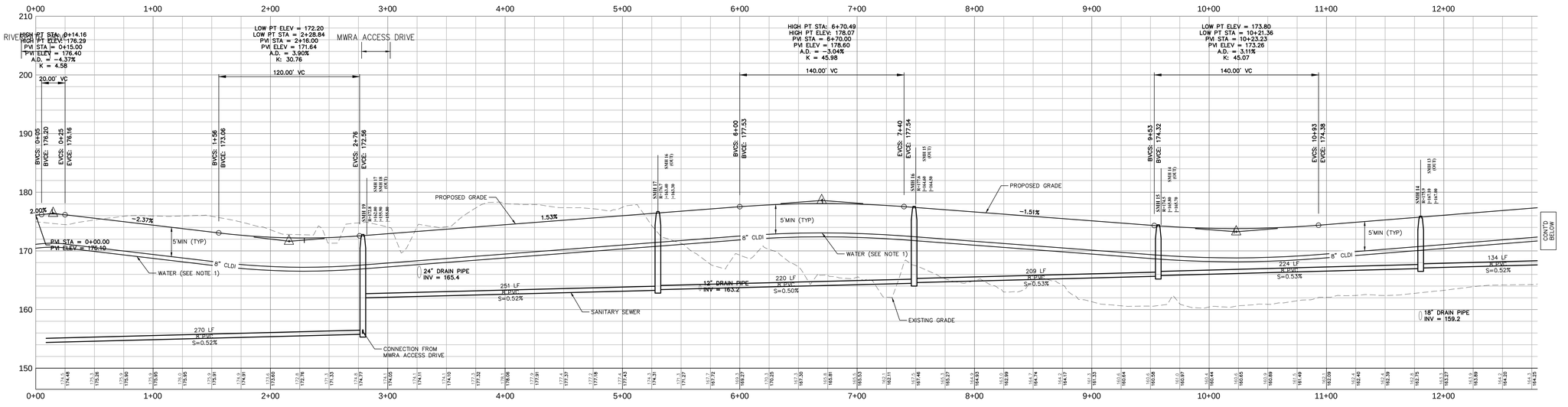

OXBOW ROAD

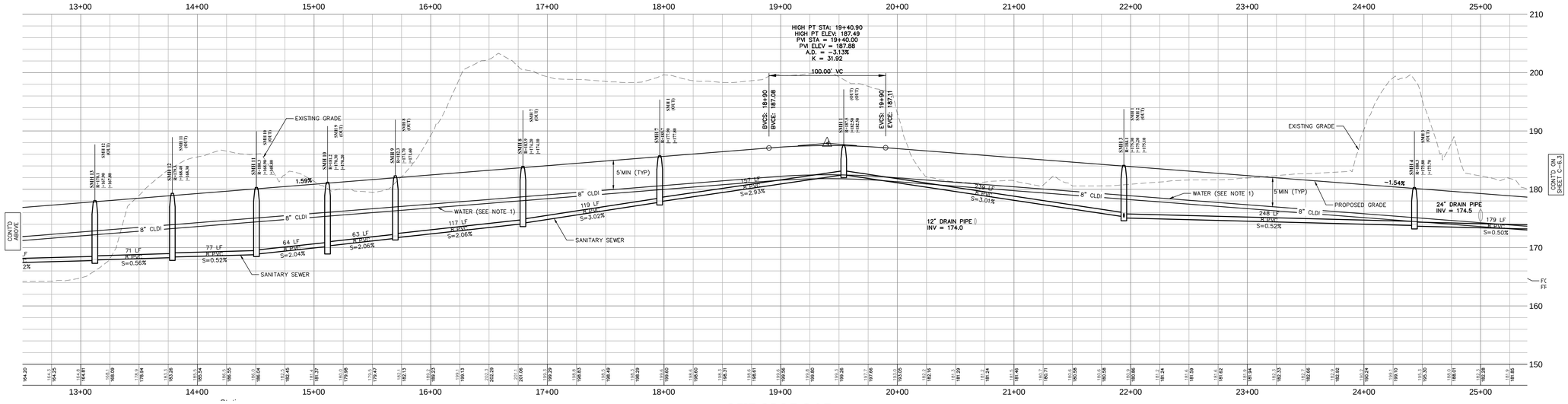

OXBOW ROAD

Notes:

1. WATER MAIN DEPICTED AT MINIMUM DEPTH OF 5'. CONTRACTOR TO VARY DEPTH AS REQUIRED TO ADDRESS CONFLICTS. ALL UTILITY CROSSINGS TO BE IN ACCORDANCE WITH DETAILS INCLUDED HEREIN, TOWN OF FRAMINGHAM STANDARDS, AND MA DEP STANDARDS.
2. PROFILES DO NOT DEPICT UNDERGROUND ELECTRIC, TELCOM, AND GAS AS DEPTH CAN EASILY VARY TO AVOID CONFLICTS.
3. SEE PLANS PREPARED BY VHB FOR OFF SITE SEWER FORCE MAIN AND GRAVITY SEWER ROUTING AS WELL AS OFF SITE ROADWAY IMPROVEMENTS.

VHB
Vanasse Hangen Brustlin, Inc.
Transportation
Land Development
Environmental Services

Union Station, Suite 219
2 Washington Square
Worcester, Massachusetts 01604
508.752.1001 • FAX 508.752.1276

PLAN INTENT:
THIS PLAN DEPICTS THE PROJECT AT A LEVEL OF DETAIL SUFFICIENT TO MEET THE REQUIREMENTS OF PERMITTING BUT IS NOT INTENDED TO INCLUDE DETAILS SUFFICIENT FOR CONSTRUCTION.

HORIZONTAL
40 0 40 80
8 0 8 16
VERTICAL
SCALE IN FEET

FRAMINGHAM PLANNING BOARD
DEFINITIVE DEVELOPMENT PLAN APPROVALS

THIS ENDORSEMENT OF THE PLANNING BOARD SHOULD NOT BE CONSTRUED TO BE DETERMINATION OF CONFORMANCE WITH ZONING REGULATIONS.

No.	Revision	Date	Appvd.
2	SPECIAL PERMIT REVISIONS	5/14/13	CCL
1	RESPONSE TO COMMENTS	4/16/13	CCL

Designed by JWD | Drawn by BMG | Checked by CCL
CAD checked by JWD | Approved by CCL
Scale See Above | Date November 12, 2012

Project Title
Danforth Green

Framingham, Massachusetts
Issued for
Permitting

NOT FOR CONSTRUCTION

Drawing Title
Road Profiles

Drawing Number
C-6.2
Sheet 16 of 27
Project Number
12004.00

COMMONWEALTH OF MASSACHUSETTS
CRAIG C. LIZOTTE
No. 39981
REGISTERED PROFESSIONAL ENGINEER

C:\Users\BMercier\Documents\12004.00\cad\ld\Planset\12004.00-PROF.dwg, 5/14/2013 1:53:15 PM, BMercier, 1:1

\\VHB\PROJ\WORCESTER\12004.00\CAD\LD\PLANSET\12004.00-PROF
Saved Tuesday, May 14, 2013 1:36:51 PM BIGSNER Plotted Tuesday, May 14, 2013 1:53:38 PM Gesner, Brittany

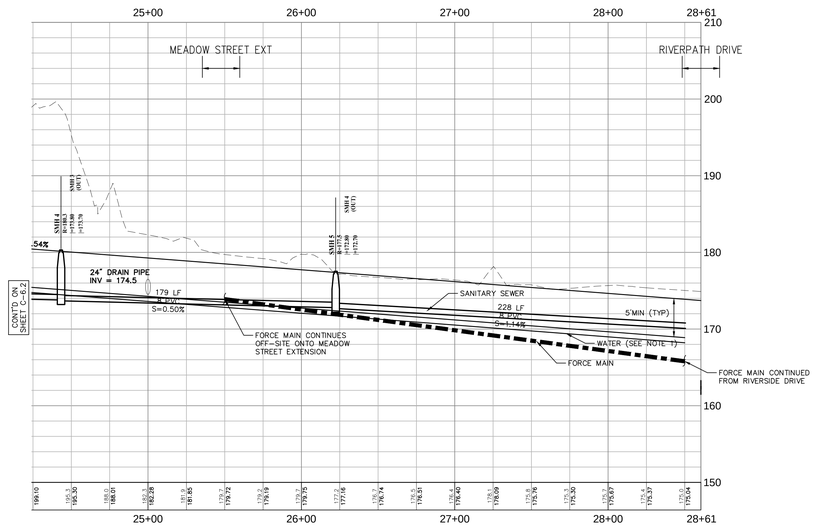

OXBOW ROAD

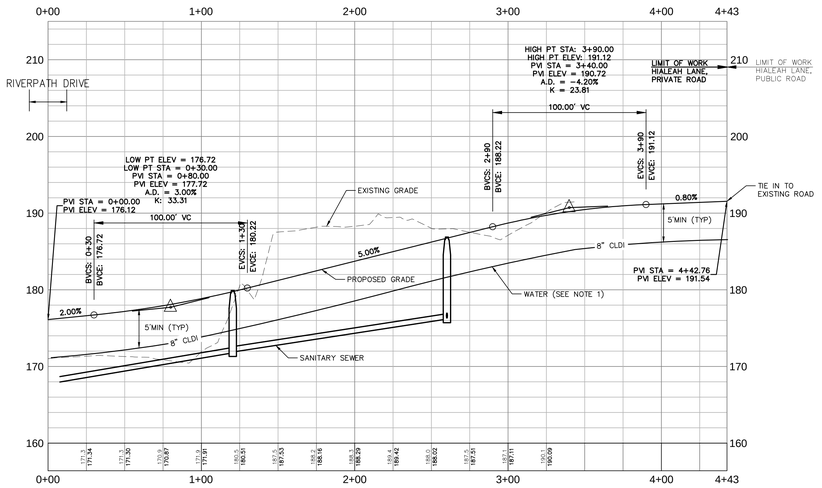

HIALEAH LANE

Notes:

1. WATER MAIN DEPICTED AT MINIMUM DEPTH OF 5'. CONTRACTOR TO VARY DEPTH AS REQUIRED TO ADDRESS CONFLICTS. ALL UTILITY CROSSINGS TO BE IN ACCORDANCE WITH DETAILS INCLUDED HEREIN, TOWN OF FRAMINGHAM STANDARDS, AND MA DEP STANDARDS.
2. PROFILES DO NOT DEPICT UNDERGROUND ELECTRIC, TELCOM, AND GAS AS DEPTH CAN EASILY VARY TO AVOID CONFLICTS.
3. SEE PLANS PREPARED BY VHB FOR OFF SITE SEWER FORCE MAIN AND GRAVITY SEWER ROUTING AS WELL AS OFF SITE ROADWAY IMPROVEMENTS.

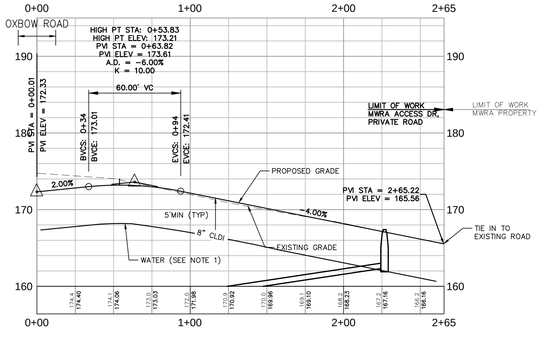

MWRA ACCESS DRIVE

Vanasse Hangen Brustlin, Inc.

Transportation
Land Development
Environmental Services

Union Station, Suite 219
2 Washington Square
Worcester, Massachusetts 01604
508.752.1001 • FAX 508.752.1276

PLAN INTENT:
THIS PLAN DEPICTS THE PROJECT AT A LEVEL OF DETAIL SUFFICIENT TO MEET THE REQUIREMENTS OF PERMITTING BUT IS NOT INTENDED TO INCLUDE DETAILS SUFFICIENT FOR CONSTRUCTION.

HORIZONTAL
40 0 40 80
VERTICAL
8 0 8 16
SCALE IN FEET

FRAMINGHAM PLANNING BOARD
DEFINITIVE DEVELOPMENT PLAN APPROVALS

THIS ENDORSEMENT OF THE PLANNING BOARD SHOULD NOT BE CONSTRUED TO BE DETERMINATION OF CONFORMANCE WITH ZONING REGULATIONS.

No.	Revision	Date	Appvd.
2	SPECIAL PERMIT REVISIONS	5/14/13	CCL
1	RESPONSE TO COMMENTS	4/16/13	CCL

Designed by JWD	Drawn by BMG	Checked by CCL	
CAD checked by JWD		Approved by CCL	
Scale See Above		Date November 12, 2012	

Project Title
Danforth Green

Framingham, Massachusetts
Issued for
Permitting

NOT FOR CONSTRUCTION

Drawing Title
Road Profiles

Drawing Number
C-6.3

Sheet 17 of 27

Project Number
12004.00

COMMONWEALTH OF MASSACHUSETTS
CRAIG C. LIZOTTE
CIVIL
NO. 50
REGISTERED PROFESSIONAL ENGINEER

12004.00-PROF.DWG

Saved Tuesday, May 14, 2013 1:33:50 PM BGESNER Plotted Tuesday, May 14, 2013 1:53:51 PM Gesner, Brittany

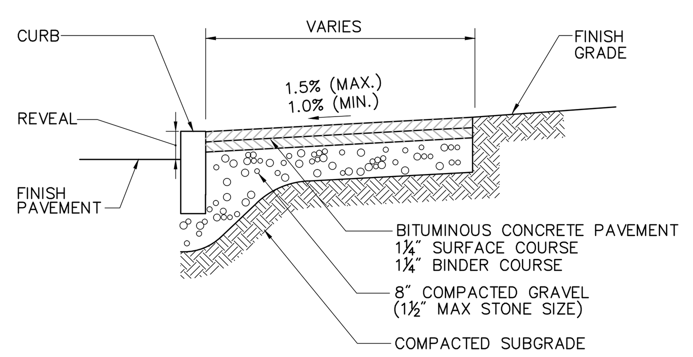

NOTE:
BOTH SURFACE AND BINDER MATERIAL SHALL BE DENSE MIX.

Bituminous Concrete Sidewalk

8/11

N.T.S. Source: VHB LD_422

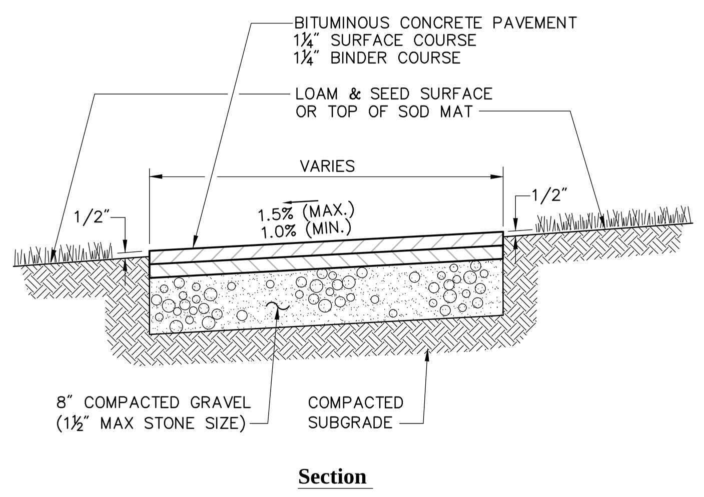

Section

Notes:

1. BOTH SURFACE AND BINDER MATERIAL SHALL BE DENSE MIX

Bituminous Sidewalk in Landscape Area

11/12

N.T.S. Source: VHB LD_426

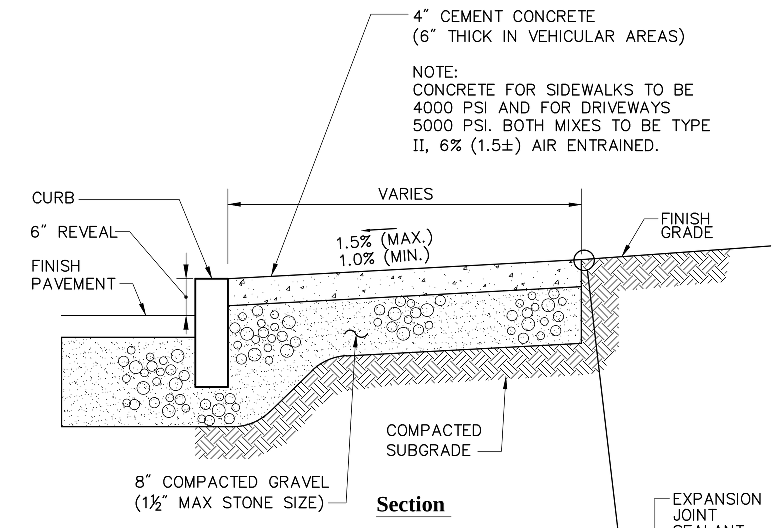

Section

Notes:

1. PROVIDE EXPANSION JOINTS AT MIN. 30 FT. O.C. WITH PRE- FORMED JOINT FILLER.
2. PROVIDE TOOLED CONTROL JOINTS AT 6' O.C.
3. PROVIDE BROOM FINISH IN DIRECTION PERPENDICULAR TO CURB.

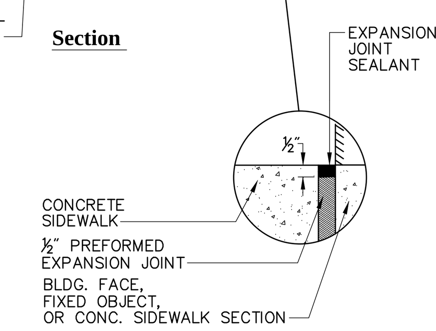

Expansion Joint Detail

Concrete Sidewalk

4/11

N.T.S. Source: VHB LD_420

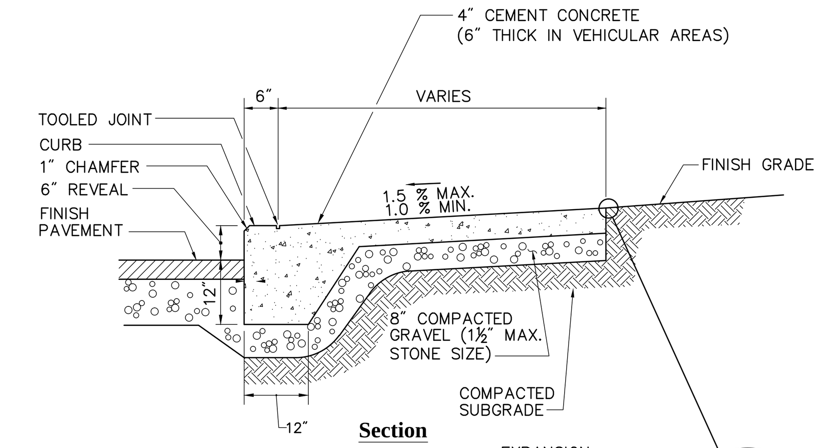

Section

Notes:

1. CONCRETE FOR SIDEWALKS TO BE 4000 PSI AND FOR DRIVEWAYS 5000 PSI. BOTH MIXES TO BE TYPE II, 6% (1.5±) AIR ENTRAINED.
2. PROVIDE EXPANSION JOINTS AT MIN. 30 FT. O.C. WITH PRE- FORMED EXPANSION JOINT FILLER & SEALER.
3. PROVIDE TOOLED CONTROL JOINTS AT 6' O.C.
4. PROVIDE BROOM FINISH IN DIRECTION PERPENDICULAR TO CURB.

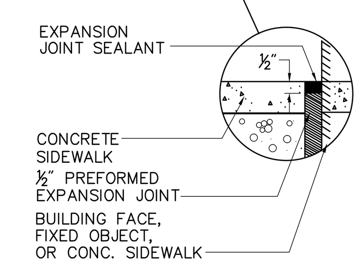

Expansion Joint Detail

Monolithic Concrete Curb (MCC) & Sidewalk

12/11

N.T.S. Source: VHB LD_421

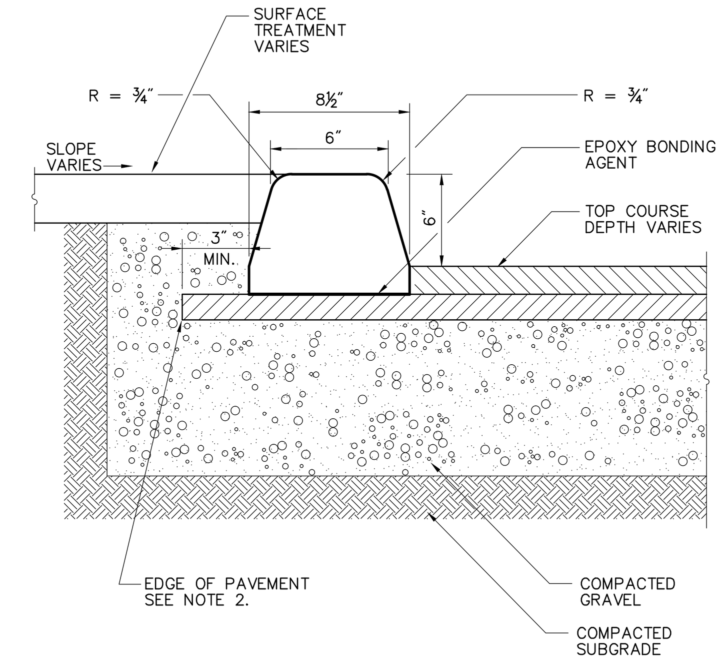

Notes:

1. ECC REFERS TO EXTRUDED CONCRETE CURB WHICH IS CAST-IN-PLACE IN THE FIELD.
2. WHEN ECC IS USED, CONTRACTOR IS TO DETERMINE THE EXTENDED LAYOUT DIMENSIONS OF THE BASE COURSE IN ORDER TO ACCOMODATE PLACEMENT OF THE ECC.

Extruded Concrete Curb (ECC)

12/11

N.T.S. Source: VHB LD_408

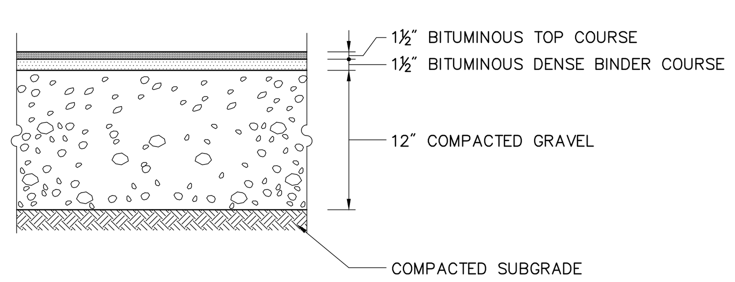

Standard Duty Flexible Pavement

Note:

PAVEMENT SECTIONS ARE SUBJECT TO CHANGE AND WILL BE BASED ON THE RESULTS OF FURTHER GEOTECHNICAL INVESTIGATIONS.

Bituminous Concrete Pavement Sections

12/11

N.T.S. Source: VHB LD_430

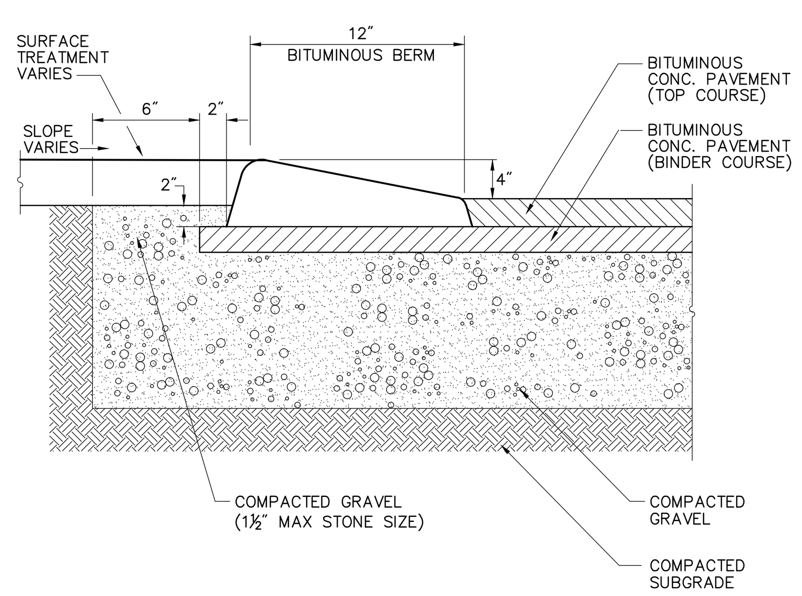

Note:

ALL CURBING TO BE MACHINE EXTRUDED

Bituminous Berm (BB)

6/08

N.T.S. Source: VHB LD_407

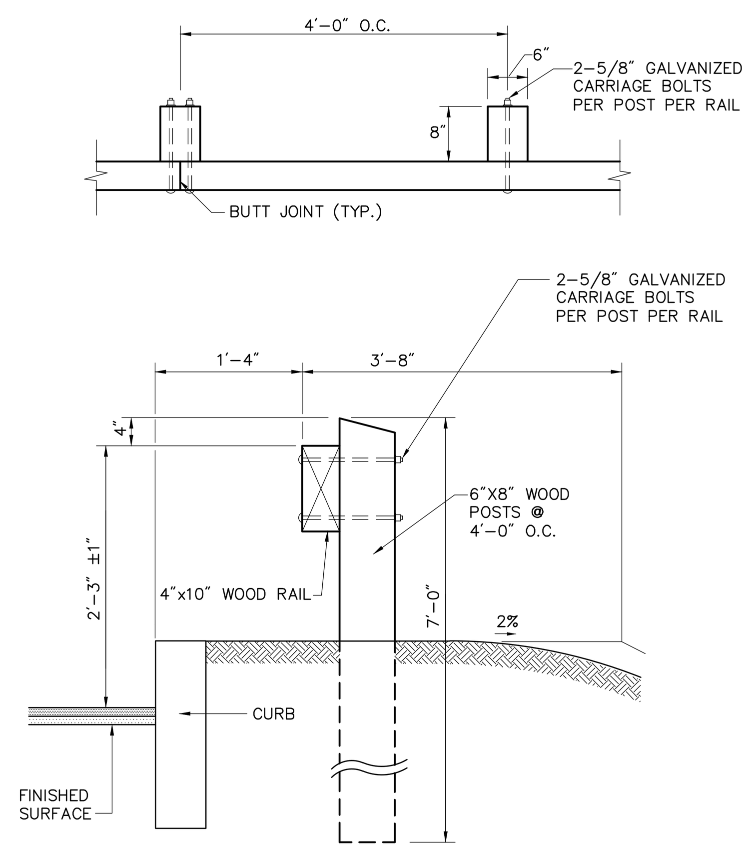

Wood Guardrail

6/08

N.T.S. Source: VHB LD_450

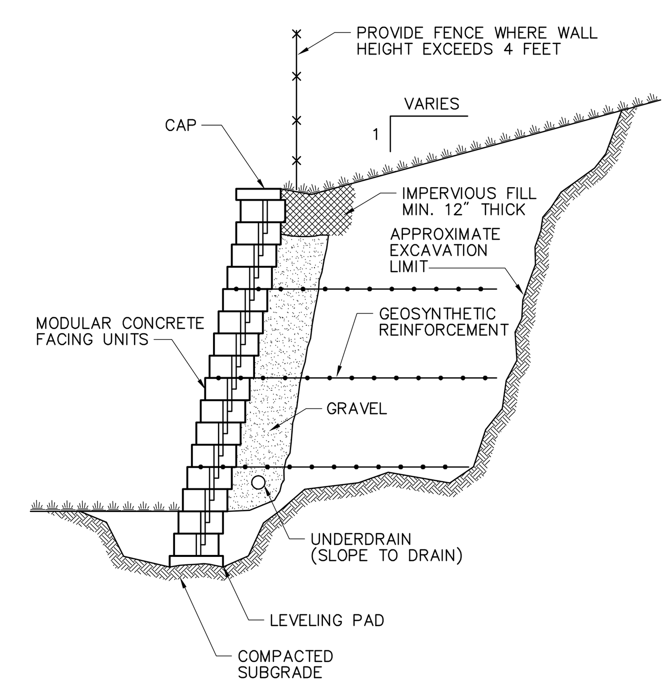

Note:

DETAIL PROVIDED FOR GENERAL INFORMATION ONLY. FINAL DESIGN OF MODULAR WALL SYSTEM, STAMPED BY MASSACHUSETTS REGISTERED PROFESSIONAL ENGINEER, TO BE PROVIDED PRIOR TO CONSTRUCTION BY WALL MANUFACTURER, BASED ON GEOTECHNICAL ENGINEERS RECOMMENDATIONS.

Typical Modular Retaining Wall

6/08

N.T.S. Source: VHB LD_750

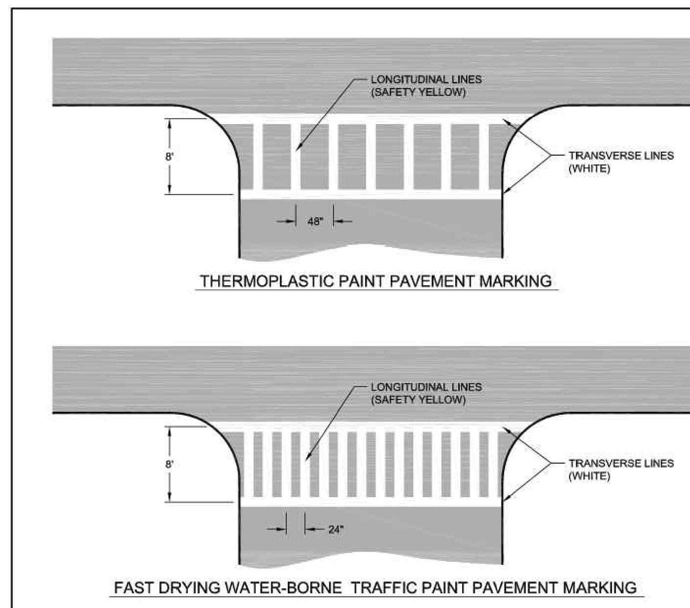

NOTES:

1. CROSSWALK MARKINGS SHALL CONSIST OF SOLID WHITE OR YELLOW (AS INDICATED) LINES (BOTH TRANSVERSE AND LONGITUDINAL) 12 INCHES IN WIDTH.
2. CROSSWALKS SHALL BE 8 FEET WIDE.
3. LONGITUDINAL LINES SHALL BE SPACED 48" APART ON CENTER FOR NEW ROADWAYS, 24" APART ON CENTER FOR EXISTING ROADWAYS.
4. CROSSWALK LINES SHALL EXTEND ACROSS THE FULL WIDTH OF PAVEMENT OR TO THE EDGE OF THE INTERSECTING CROSSWALK.
5. CROSSWALKS SHALL BE MARKED AT ALL INTERSECTIONS WHERE THERE IS SUBSTANTIAL CONFLICT BETWEEN VEHICULAR AND PEDESTRIAN MOVEMENT.
6. CROSSWALK MARKINGS FOR NEW ROADWAYS SHALL BE INSTALLED USING THERMOPLASTIC PAVING MARKING MATERIAL TO MEET MHD SPECIFICATIONS M07.01.03 (WHITE) AND M07.01.04 (YELLOW).
7. CROSSWALK MARKINGS FOR EXISTING ROADWAYS SHALL BE INSTALLED USING FAST DRYING WATER-BORNE TRAFFIC PAINT PAVING MARKING MATERIAL TO MEET MHD SPECIFICATIONS M07.01.23 (WHITE) AND M07.01.24 (YELLOW).

NOT TO SCALE

TOWN OF FRAMINGHAM DEPARTMENT OF PUBLIC WORKS	CROSS WALK	DATE: SEPT. 2008 / REV: 0	DETAIL NO. R-5.5.0

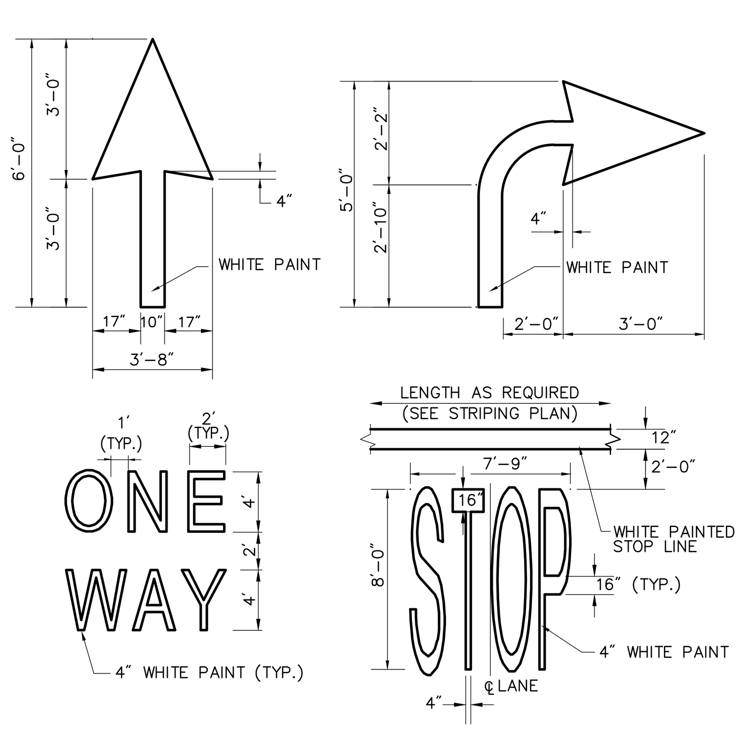

Notes:

1. PAVEMENT MARKINGS TO BE INSTALLED FOR ON SITE WORK IN LOCATIONS SHOWN.

Painted Pavement Markings - On Site

6/08

N.T.S. Source: VHB LD_554

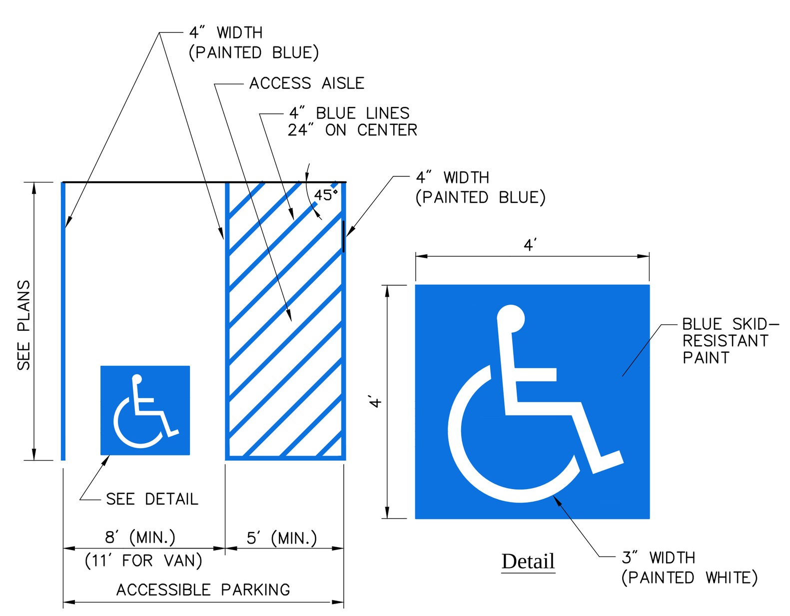

Notes:

1. ALL DIMENSIONS TO EDGES OF 4" PAVEMENT STRIPING.
2. 8' STALL WIDTH REFERS TO 8' CLEAR BETWEEN INSIDE EDGES OF PAVEMENT MARKINGS.
3. ALL SLOPES THROUGHOUT THE ACCESSIBLE PARKING AND AISLE AREAS SHALL NOT EXCEED 1.5%.

Accessible Parking Space

11/10

N.T.S. Source: VHB LD_552

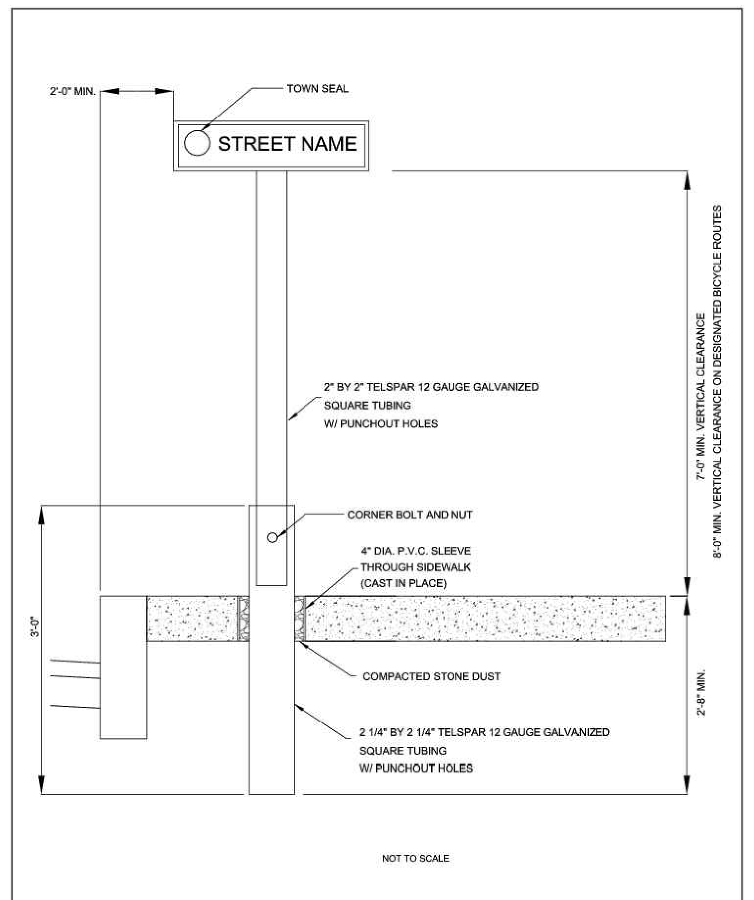

TOWN OF FRAMINGHAM DEPARTMENT OF PUBLIC WORKS	STREET SIGN DETAIL SIDEWALK INSTALLATION	DATE: MARCH 2011 / REV: 0	DETAIL NO. R-5.7.4

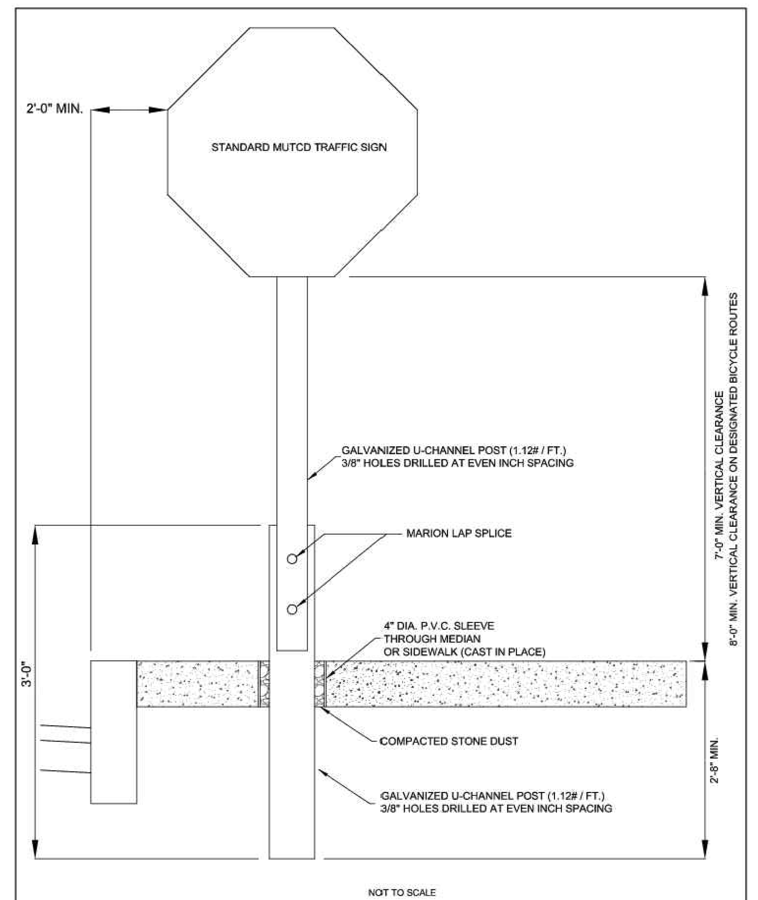

TOWN OF FRAMINGHAM DEPARTMENT OF PUBLIC WORKS	TRAFFIC SIGN DETAIL SIDEWALK OR MEDIAN INSTALLATION	DATE: JAN. 2011 / REV: 0	DETAIL NO. R-5.7.1

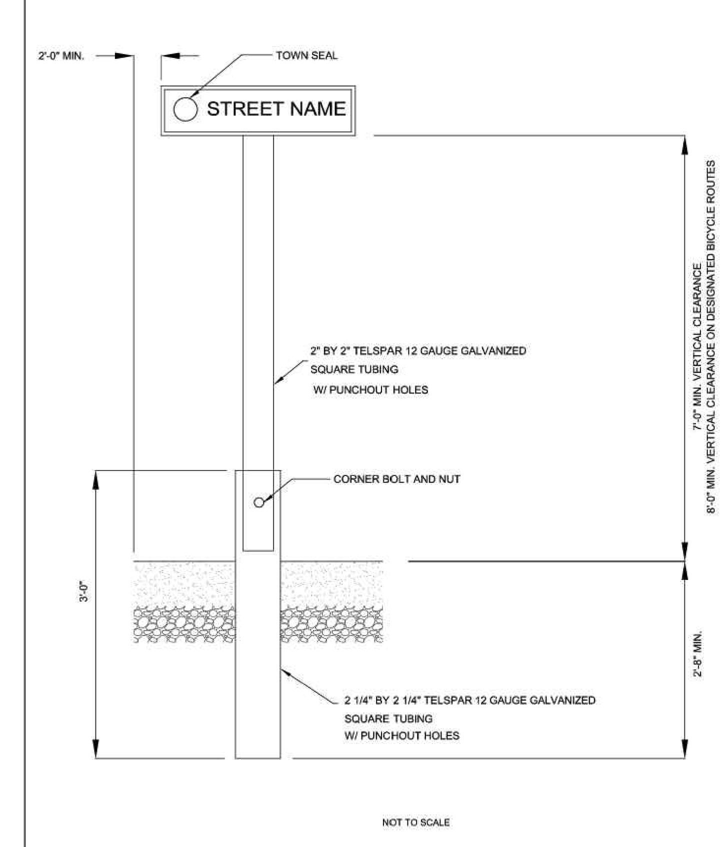

TOWN OF FRAMINGHAM DEPARTMENT OF PUBLIC WORKS	STREET SIGN DETAIL NON-SIDEWALK INSTALLATION	DATE: MARCH 2011 / REV: 0	DETAIL NO. R-5.7.5

VHB
Vanasse Hangen Brustlin, Inc.

Transportation
Land Development
Environmental Services

Union Station, Suite 219
2 Washington Square
Worcester, Massachusetts 01604
508.752.1001 • FAX 508.752.1276

PLAN INTENT:
THIS PLAN DEPICTS THE PROJECT AT A LEVEL OF DETAIL SUFFICIENT TO MEET THE REQUIREMENTS OF PERMITTING BUT IS NOT INTENDED TO INCLUDE DETAILS SUFFICIENT FOR CONSTRUCTION.

Notes:

1. DETAILS SHOWN HEREON ARE INTENDED TO APPLY ONLY TO WORK SHOWN IN THIS PLANSET, WHICH IS TO BE COMPLETED ON PRIVATE PROPERTY AND NOT WITHIN THE TOWN OF FRAMINGHAM RIGHT OF WAY. SPECIFIC OFF-SITE IMPROVEMENT PLANS WILL BE PREPARED FOR WORK WITHIN TOWN OF FRAMINGHAM RIGHT OF WAY AND THESE PLANS WILL INCLUDE TOWN OF FRAMINGHAM DETAILS.

FRAMINGHAM PLANNING BOARD
DEFINITIVE DEVELOPMENT PLAN APPROVALS

THIS ENDORSEMENT OF THE PLANNING BOARD SHOULD NOT BE CONSTRUED TO BE DETERMINATION OF CONFORMANCE WITH ZONING REGULATIONS.

No.	Revision	Date	Appvd.
2	SPECIAL PERMIT REVISIONS	5/14/13	CCL
1	RESPONSE TO COMMENTS	4/16/13	CCL

Designed by REW | Drawn by REW | Checked by CCL
CAD checked by CCL | Approved by CCL
Scale As Noted | Date November 12, 2012

Project Title
Danforth Green

Framingham, Massachusetts

Issued for
Permitting

NOT FOR CONSTRUCTION

Drawing Title
Site Details 1

COMMONWEALTH OF MASSACHUSETTS CRAIG C. LIZOTTE CIVIL No. 39811 REGISTERED PROFESSIONAL ENGINEER

Drawing Number
C-7.1

Sheet 18 of 27

Project Number
12004.00

Saved Tuesday, May 14, 2013 1:33:50 PM BIGSNER Plotted Tuesday, May 14, 2013 1:33:57 PM Gesner, Brittany

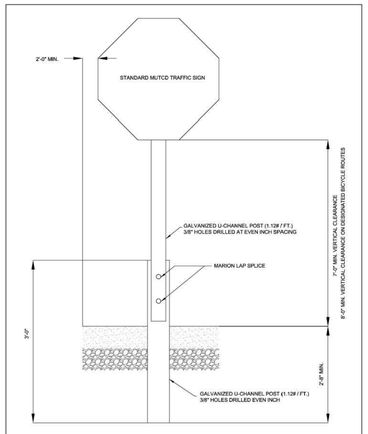

TOWN OF FRAMINGHAM DEPARTMENT OF PUBLIC WORKS	TRAFFIC SIGN DETAIL NON-SIDEWALK INSTALLATION	DATE: MARCH 2011	DETAIL NO.
		REV: 0	R-5.7.2

1. EACH SIGN SHALL CONSIST OF (2) SINGLE SIDED PLATES USING DRIVE PINS TO SECURE PLATES TO POST.
2. OUTER EDGE OF SIGN SHALL BE SECURED WITH POP RIVETS AND 2" SPACER BETWEEN THE 2 PLATES.
3. FONT SHALL BE HIGHWAY GOTHIC B.
4. PLATES SHALL HAVE ROUNDED CORNERS.
5. WHITE AVERY-DENNISON PRISMATIC PLATE SHALL BE UTILIZED.
6. THE SIGNS SHALL INCLUDE 5.5" TOWN SEALS (2 REQUIRED).
7. THE SIGNS SHALL INCLUDE A 0.5" WHITE BORDER.

TOWN OF FRAMINGHAM DEPARTMENT OF PUBLIC WORKS	STREET NAME SIGN INSTALLATION NOTES	DATE: MARCH 2011	DETAIL NO.
		REV: 0	R-5.7.3

1. ALL NEW SIGNS SHALL BE INSTALLED ONLY UPON RESOLUTION OF THE BOARD OF SELECTMEN OR ORDER OF THE TRAFFIC AND ROADWAY SAFETY COMMITTEE, AS APPLICABLE.
2. TYPICALLY, SIGNS SHOULD BE ERECTED INDIVIDUALLY ON SEPARATE POSTS EXCEPT WHERE ONE SIGN SUPPLEMENTS ANOTHER OR WHERE DIRECTIONAL SIGNS MUST BE GROUPED. WHEN USING SUPPLEMENTAL SIGNS, DO NOT OVERLAP WITH THE PRIMARY SIGN. WARNING AND REGULATORY SIGNS SHALL NOT BE COMBINED. IF IN DOUBT ABOUT COMBINING SIGNS, CHECK WITH THE TOWN ENGINEER.
3. THE ENTIRE SIGN SHAPE MUST BE VISIBLE.
4. SIGNS SHALL BE LOCATED SO THEY ARE VISIBLE AT NIGHT.
5. SIGNS SHALL BE LOCATED SO THAT THEY DO NOT BLOCK OR OBSCURE OTHER SIGNS.
6. THE OUTER EDGE OF A SIGN SHALL BE OFFSET A MINIMUM OF TWO FEET HORIZONTALLY FROM THE FACE OF CURB. WHERE SIDEWALK IS LESS THAN FIVE FEET WIDE, ONE FOOT FROM FACE OF CURB IS PERMISSIBLE.
7. SIGNS SHALL BE INSTALLED TO PROVIDE 7 FEET OF VERTICAL CLEARANCE ABOVE SIDEWALKS OR ANY LOCATION WHERE PEDESTRIANS MAY BE PRESENT (8 FEET OF VERTICAL CLEARANCE SHALL BE PROVIDED ON DESIGNATED BICYCLE ROUTES).
8. IF NO SIDEWALK IS PRESENT, SIGNS SHALL BE LOCATED SIX FEET FROM THE EDGE OF PAVEMENT, MEASURED FROM OUTER SIGN EDGE.
9. SIGNS MAY BE INSTALLED ON EXISTING STREET LIGHT POLES, TRAFFIC SIGNAL POLES, ETC., USING METRO WING BRACKETS, WHEN APPROPRIATE AND AS APPROVED, TO REDUCE THE NUMBER OF POSTS. SIGNS SHALL NOT BE INSTALLED ON POWER POLES.
10. SIGNS SHALL BE INSTALLED AT APPROXIMATELY A RIGHT ANGLE TO THE TRAFFIC APPROACH DIRECTION. SIGNS SHALL BE TURNED SLIGHTLY AWAY FROM ROAD TO PREVENT "FLASHBACK" OF REFLECTION.
11. UPON COMPLETION OF SIGN INSTALLATION, THE CONTRACTOR AND ENGINEER SHALL INSPECT THE SIGN'S VISIBILITY AND SHALL CHECK THE SIGN'S LOCATION FOR SUFFICIENT ADVANCE WARNING. THIS SHALL BE ACCOMPLISHED BY DRIVING TOWARDS THE SIGN AT A SAFE AND PRUDENT SPEED, OR AT A SPEED NEAR TO THE SPEED LIMIT.
12. STREET SIGNS ARE TO BE MOUNTED ON A 2" X 2" SQUARE GALVANIZED POST. ALL OTHER SIGNS ARE TO BE MOUNTED ON A U-CHANNEL POST.
13. ALL SIGN POSTS MOUNTED IN CONCRETE MUST BE SLEEVED WITH A CAST-IN-PLACE 4" PVC PIPE.
14. PROPOSED SIGN LOCATIONS SHALL BE STAKED IN THE FIELD FOR REVIEW AND APPROVED BY TOWN, PRIOR TO INSTALLATION.

TOWN OF FRAMINGHAM DEPARTMENT OF PUBLIC WORKS	TRAFFIC SIGN INSTALLATION NOTES	DATE: MARCH 2011	DETAIL NO.
		REV: 0	R-5.7.0

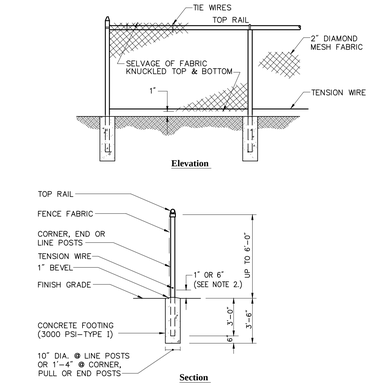

Note:

1. MATERIALS TO BE SUPPLIED AND INSTALLED IN CONFORMANCE WITH "CHAIN LINK MANUFACTURER'S INSTITUTE" PRODUCT MANUAL.
2. PROVIDE 6" OF CLEARANCE BETWEEN THE BOTTOM OF FABRIC AND FINISH GRADE AROUND BMP IF AN ORDER OF CONDITIONS WAS ISSUED FOR THE PROJECT.

Chain Link Fence up to 6'

5/12

N.T.S. Source: VHB LD_481_MA

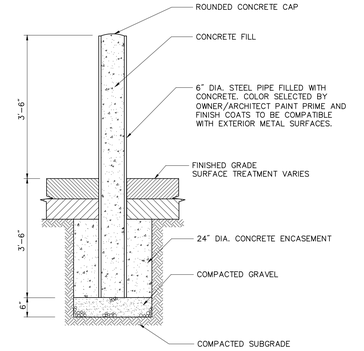

Bollard

6/08

N.T.S. Source: VHB LD_700

Vanasse Hangen Brustlin, Inc.

Transportation
Land Development
Environmental Services

Union Station, Suite 219
2 Washington Square
Worcester, Massachusetts 01604
508.752.1001 • FAX 508.752.1276

PLAN INTENT:
THIS PLAN DEPICTS THE PROJECT AT A LEVEL OF DETAIL SUFFICIENT TO MEET THE REQUIREMENTS OF PERMITTING BUT IS NOT INTENDED TO INCLUDE DETAILS SUFFICIENT FOR CONSTRUCTION.

Notes:

1. DETAILS SHOWN HEREON ARE INTENDED TO APPLY ONLY TO WORK SHOWN IN THIS PLANSET, WHICH IS TO BE COMPLETED ON PRIVATE PROPERTY AND NOT WITHIN THE TOWN OF FRAMINGHAM RIGHT OF WAY. SPECIFIC OFF-SITE IMPROVEMENT PLANS WILL BE PREPARED FOR WORK WITHIN TOWN OF FRAMINGHAM RIGHT OF WAY AND THESE PLANS WILL INCLUDE TOWN OF FRAMINGHAM DETAILS.

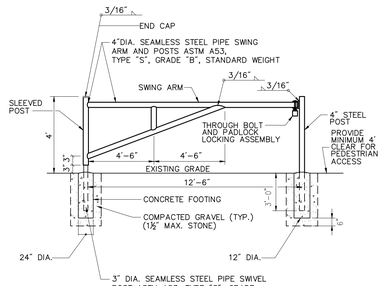

Notes:

1. SHOP PRIME PAINT EXPOSED SURFACES FIELD PAINT EPOXY ENAMEL-YELLOW.
2. PROVIDE "MASTER" PADLOCK WITH 6 WORKING KEYS.
3. 3,000 PSI CONCRETE FOOTING

Access Gate, Meadow Street Extension

2/09

N.T.S. Source: VHB LD_485

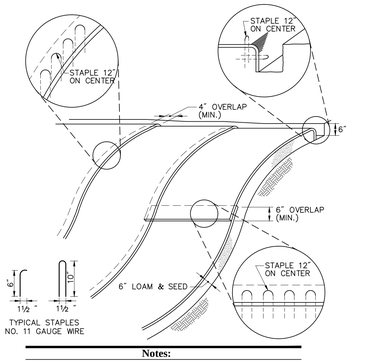

Notes:

1. BEGIN AT THE TOP OF BLANKET INSTALLATION AREA BY ANCHORING BLANKET IN A 6" DEEP TRENCH BACKFILL AND COMPACT TRENCH AFTER STAPLING.
2. ROLL THE BLANKET DOWN THE SWALE IN THE DIRECTION OF THE WATER FLOW.
3. THE EDGES OF BLANKETS MUST BE STAPLED WITH APPROX. 4 INCH OVERLAP WHERE 2 OR MORE STRIP WIDTHS ARE REQUIRED.
4. WHEN BLANKETS MUST BE SPLICED DOWN THE SWALE, PLACE UPPER BLANKET END OVER LOWER END WITH 6 INCH (MIN.) OVERLAP AND STAPLE BOTH TOGETHER.
5. METHOD OF INSTALLATION SHALL BE AS PER MANUFACTURER'S RECOMMENDATIONS.
6. TO BE USED ON ALL SLOPES 2:1 AND STEEPER

Erosion Control Blanket Slope Installation

1/10

N.T.S. Source: VHB LD_680

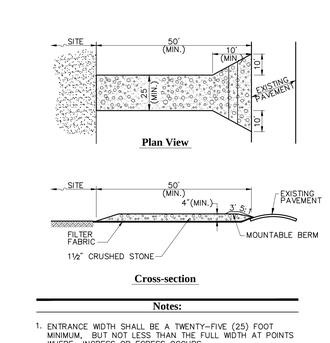

Notes:

1. ENTRANCE WIDTH SHALL BE A TWENTY-FIVE (25) FOOT MINIMUM, BUT NOT LESS THAN THE FULL WIDTH AT POINTS WHERE INGRESS OR EGRESS OCCURS.
2. THE ENTRANCE SHALL BE MAINTAINED IN A CONDITION WHICH SHALL PREVENT TRACKING OR FLOWING OF SEDIMENT ONTO PUBLIC RIGHTS-OF-WAY. THIS MAY REQUIRE PERIODIC TOP DRESSING WITH ADDITIONAL STONE AS CONDITIONS DEMAND AND REPAIR OR CLEANOUT OF ANY MEASURES USED TO TRAP SEDIMENT. ALL SEDIMENT SPILLED, DROPPED, WASHED OR TRACKED ONTO PUBLIC RIGHTS-OF-WAY MUST BE REMOVED IMMEDIATELY. BERM SHALL BE PERMITTED. PERIODIC INSPECTION AND MAINTENANCE SHALL BE PROVIDED AS NEEDED.
3. STABILIZED CONSTRUCTION EXIT SHALL BE REMOVED PRIOR TO FINAL FINISH MATERIALS BEING INSTALLED.

Stabilized Construction Exit

6/08

N.T.S. Source: VHB LD_682

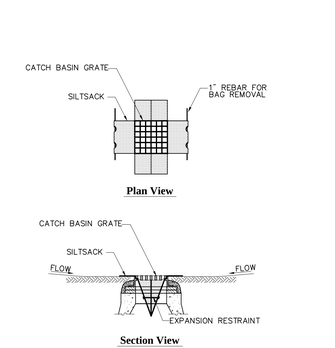

Notes:

1. INSTALL SILTSACK IN ALL CATCH BASINS WHERE INDICATED ON THE PLAN BEFORE COMMENCING WORK OR IN PAVED AREAS AFTER BINDER COURSE IS PLACED AND HAY BALES HAVE BEEN REMOVED.
2. GRATE TO BE PLACED OVER SILTSACK.
3. SILTSACK SHALL BE INSPECTED PERIODICALLY AND AFTER ALL STORM EVENTS AND CLEANING OR REPLACEMENT SHALL BE PERFORMED PROMPTLY AS NEEDED. MAINTAIN UNTIL UPSTREAM AREAS HAVE BEEN PERMANENTLY STABILIZED

Siltsack Sediment Trap

6/08

N.T.S. Source: VHB LD_674

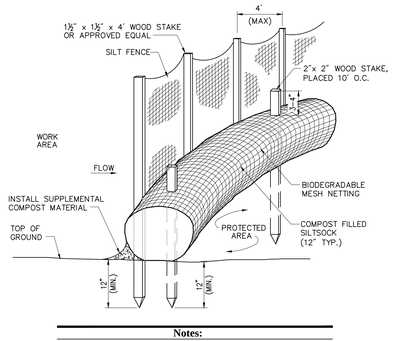

Notes:

1. SILTSOCK SHALL BE FILTREXX SILTSOXX, OR APPROVED EQUAL.
2. SILTSOCKS SHALL OVERLAP A MINIMUM OF 12 INCHES.
3. SILTSOCK SHALL BE INSPECTED PERIODICALLY AND AFTER ALL STORM EVENTS, AND REPAIR OR REPLACEMENT SHALL BE PERFORMED PROMPTLY AS NEEDED.
4. COMPOST MATERIAL SHALL BE DISPERSED ON SITE, AS DETERMINED BY THE ENGINEER.
5. IF NON BIODEGRADABLE NETTING IS USED THE MATTING SHALL BE COLLECTED AND DISPOSED OF OFFSITE.

Siltsock / Silt Fence Barrier

8/12

N.T.S. Source: VHB LD_658-A

FRAMINGHAM PLANNING BOARD
DEFINITIVE DEVELOPMENT PLAN APPROVALS

THIS ENDORSEMENT OF THE PLANNING BOARD SHOULD NOT BE CONSTRUED TO BE DETERMINATION OF CONFORMANCE WITH ZONING REGULATIONS.

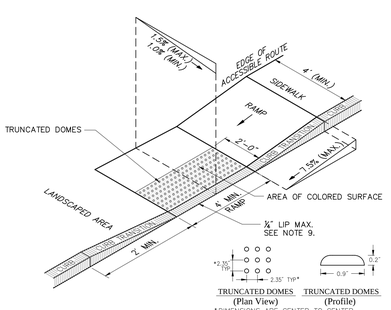

Notes:

1. THE MAXIMUM ALLOWABLE SIDEWALK AND CURB RAMP CROSS SLOPES SHALL BE 1.5 (1% MIN.).
2. THE MAXIMUM ALLOWABLE SLOPE OF ACCESSIBLE ROUTE EXCLUDING CURB RAMPS SHALL BE 5%
3. THE MAXIMUM ALLOWABLE SLOPE OF ACCESSIBLE ROUTE AT CURB RAMPS SHALL BE 7.5%.
4. A MINIMUM OF 3 FEET CLEAR SHALL BE MAINTAINED AT ANY PERMANENT OBSTACLE IN ACCESSIBLE ROUTE (I.E., HYDRANTS, UTILITY POLES, TREE WELLS, SIGNS, ETC.).
5. CURB TREATMENT VARIES, SEE PLANS FOR CURB TYPE.
6. RAMP, CURB, AND ADJACENT PAVEMENTS SHALL BE GRADED TO PREVENT PONDING.
7. TYPICAL SIDEWALK SECTION FOR RAMP SECTION CONSTRUCTION.
8. WHERE ACCESSIBLE ROUTES ARE LESS THAN 5' IN WIDTH (EXCLUDING CURBING) A 5' x 5' PASSING AREA SHALL BE PROVIDED AT INTERVALS NOT TO EXCEED 200 FEET.
9. ELIMINATE CURBING AT RAMP WHERE IT ABUTS ROADWAY, EXCEPT WHERE VERTICAL CURBING IS INDICATED ON THE DRAWINGS TO BE INSTALLED AND SET FLUSH.
10. DETECTABLE WARNINGS SHALL CONTRAST VISUALLY WITH ADJOINING SURFACES.
11. DETECTABLE WARNINGS SHALL BE INSTALLED PERPENDICULAR TO THE ACCESSIBLE ROUTE.

Accessible Curb Ramp (ACR) Type 'G-D'

11/10

N.T.S. Source: VHB LD_506

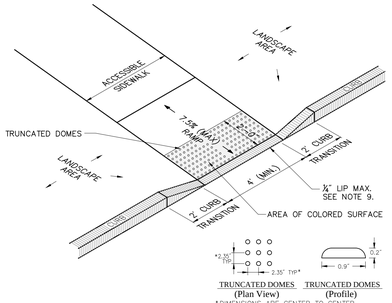

Notes:

1. THE MAXIMUM ALLOWABLE SIDEWALK AND CURB RAMP CROSS SLOPES SHALL BE 1.5 (1% MIN.).
2. THE MAXIMUM ALLOWABLE SLOPE OF ACCESSIBLE ROUTE EXCLUDING CURB RAMPS SHALL BE 5%
3. THE MAXIMUM ALLOWABLE SLOPE OF ACCESSIBLE ROUTE AT CURB RAMPS SHALL BE 7.5%.
4. A MINIMUM OF 3 FEET CLEAR SHALL BE MAINTAINED AT ANY PERMANENT OBSTACLE IN ACCESSIBLE ROUTE (I.E., HYDRANTS, UTILITY POLES, TREE WELLS, SIGNS, ETC.).
5. CURB TREATMENT VARIES, SEE PLANS FOR CURB TYPE.
6. RAMP, CURB AND ADJACENT PAVEMENTS SHALL BE GRADED TO PREVENT PONDING.
7. TYPICAL SIDEWALK SECTION FOR RAMP SECTION CONSTRUCTION.
8. WHERE ACCESSIBLE ROUTES ARE LESS THAN 5' IN WIDTH (EXCLUDING CURBING) A 5' x 5' PASSING AREA SHALL BE PROVIDED AT INTERVALS NOT TO EXCEED 200 FEET.
9. ELIMINATE CURBING (OTHER THAN VERTICAL CURBING, WHICH SHALL BE SET FLUSH) WHERE IT ABUTS ROADWAY.
10. DETECTABLE WARNINGS SHALL CONTRAST VISUALLY WITH ADJOINING SURFACES.
11. DETECTABLE WARNINGS SHALL BE INSTALLED PERPENDICULAR TO THE ACCESSIBLE ROUTE.

Accessible Curb Ramp (ACR) Type 'M-D'

11/10

N.T.S. Source: VHB LD_512

WHEELCHAIR RAMPS SHALL BE CONSTRUCTED IN CONFORMANCE WITH THE CURRENT REGULATIONS OF THE ARCHITECTURAL ACCESS BOARD, THE AMERICANS WITH DISABILITIES ACT AND THE CURRENT MASSHIGHWAY CONSTRUCTION STANDARDS.

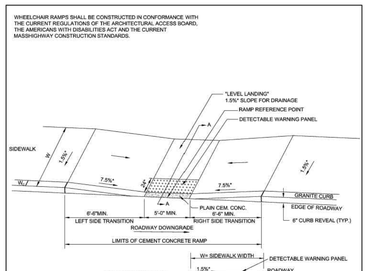

WHEELCHAIR RAMP TYPE A
NOT TO SCALE

LEGEND:
HSL = HIGH SIDE TRANSITION LENGTH
W = SIDEWALK WIDTH
W_1 = CURB WIDTH
* = TOLERANCE FOR CONSTRUCTION ±0.5%
USABLE SIDEWALK WIDTH PER AAB = $W-W_1$
USABLE SIDEWALK WIDTH PER AAB IS NOT TO BE LESS THAN 4'-0"
SEE M/E 107.6.5R FOR DETAILS OF DETECTABLE WARNING PANEL

TOWN OF FRAMINGHAM DEPARTMENT OF PUBLIC WORKS	WHEELCHAIR RAMP TYPE A	DATE: FEB. 2010	DETAIL NO.
		REV: 0	R-5.3.1

WHEELCHAIR RAMPS SHALL BE CONSTRUCTED IN CONFORMANCE WITH THE CURRENT REGULATIONS OF THE ARCHITECTURAL ACCESS BOARD, THE AMERICANS WITH DISABILITIES ACT AND THE CURRENT MASSHIGHWAY CONSTRUCTION STANDARDS.

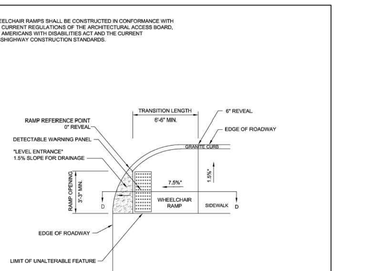

WHEELCHAIR RAMP TYPE D
NOT TO SCALE

LEGEND:
HSL = HIGH SIDE TRANSITION LENGTH
W = SIDEWALK WIDTH
W1 = PERPENDICULAR RAMP LENGTH
* = TOLERANCE FOR CONSTRUCTION ±0.5%
USABLE SIDEWALK WIDTH PER AAB IS NOT TO BE LESS THAN 4'-0"
SEE M/E 107.6.5R FOR DETAILS OF DETECTABLE WARNING PANEL

TOWN OF FRAMINGHAM DEPARTMENT OF PUBLIC WORKS	WHEELCHAIR RAMP TYPE D	DATE: FEB. 2010	DETAIL NO.
		REV: 0	R-5.3.4

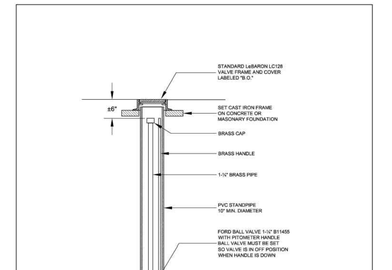

NOT TO SCALE

TOWN OF FRAMINGHAM DEPARTMENT OF PUBLIC WORKS	AIR RELEASE VALVE/BLOW-OFF	DATE: SEPT. 2006	DETAIL NO.
		REV: 0	W-2.4.2

No.	Revision	Date	Appvd.
2	SPECIAL PERMIT REVISIONS	5/14/13	CCL
1	RESPONSE TO COMMENTS	4/16/13	CCL

Designed by REW | Drawn by REW | Checked by CCL
CAD checked by CCL | Approved by CCL
Scale As Noted | Date November 12, 2012

Project Title
Danforth Green

Framingham, Massachusetts

Issued for
Permitting

NOT FOR CONSTRUCTION

Drawing Title
Site Details 2

Drawing Number
C-7.2

Sheet 19 of 27

Project Number
12004.00

12004.00-DT.DWG

Saved Tuesday, May 14, 2013 1:33:50 PM BIGSNER Plotted Tuesday, May 14, 2013 1:54:02 PM Geiner, Brittany

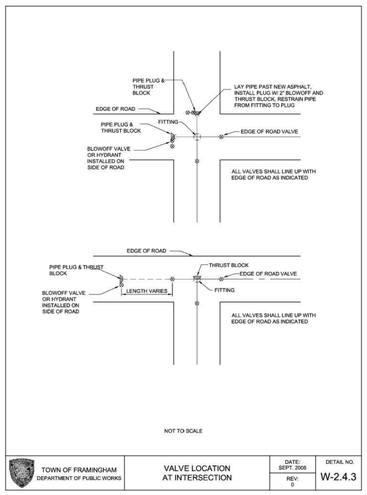

NOT TO SCALE

TOWN OF FRAMINGHAM DEPARTMENT OF PUBLIC WORKS	VALVE LOCATION AT INTERSECTION	DATE: SEPT. 2008	DETAIL NO.
		REV: 0	W-2.4.3

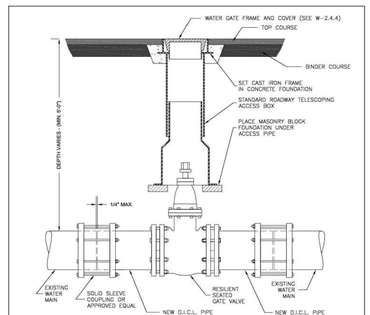

NOTE:
ALL EXCAVATION, BACKFILLING AND PAVING SHALL BE IN ACCORDANCE WITH THE TOWN OF FRAMINGHAM REQUIREMENTS.

NOT TO SCALE

TOWN OF FRAMINGHAM DEPARTMENT OF PUBLIC WORKS	GATE VALVE	DATE: MARCH 2010	DETAIL NO.
		REV: 1	W-2.4.0

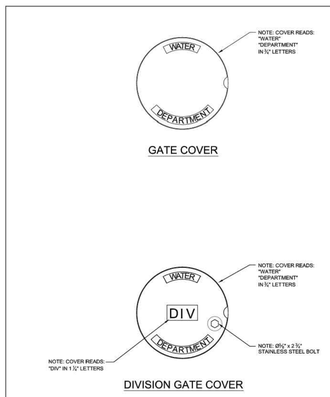

NOT TO SCALE

TOWN OF FRAMINGHAM DEPARTMENT OF PUBLIC WORKS	WATER GATE COVER	DATE: MAR. 2012	DETAIL NO.
		REV: 2	W-2.4.4

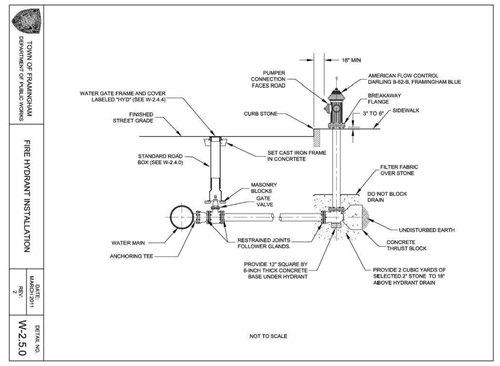

NOT TO SCALE

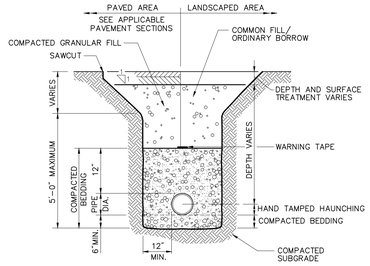

Notes:

1. WHERE UTILITY TRENCHES ARE CONSTRUCTED THROUGH DETENTION BASIN BERMS OR OTHER SUCH SPECIAL SECTIONS, PLACE TRENCH BACKFILL WITH MATERIALS SIMILAR TO THE SPECIAL SECTION REQUIREMENTS.
2. USE METALLIC TRACING/WARNING TAPE OVER ALL PIPES.
3. FOR WATER MAIN AND HDPE DRAIN PIPE TRENCH INFORMATION, REFER TO DETAILS TITLED "WATER MAIN TRENCH DETAIL" AND "TYPICAL HDPE PIPE TRENCH DETAIL" BY TOWN OF FRAMINGHAM.

Utility Trench

8/11

N.T.S. Source: VHB LD_300

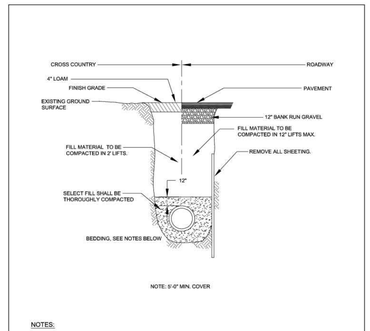

NOTE: 5'-0" MIN. COVER

NOTES:

1. TOWN OF FRAMINGHAM MAY REQUIRE FLOWABLE FILL AT ITS DISCRETION.
2. FOR LOCATIONS WHERE LEDGE IS NOT ENCOUNTERED IN TRENCH, PIPE CAN LAY ON UNDISTURBED EARTH; OR ON SAND BEDDING CONSISTENT WITH AWWA GUIDELINES.
3. FOR LOCATIONS WHERE LEDGE IS ENCOUNTERED, SAND BEDDING SHALL BE MINIMUM OF 12" THICK UNDER PIPE.
4. FILL MATERIAL SHALL BE COMPACTED TO 95% PROCTOR DENSITY.

NOT TO SCALE

TOWN OF FRAMINGHAM DEPARTMENT OF PUBLIC WORKS	WATER MAIN TRENCH DETAIL	DATE: MARCH 2011	DETAIL NO.
		REV: 2	W-2.3.0

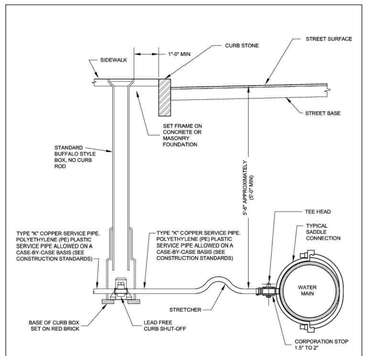

NOT TO SCALE

TOWN OF FRAMINGHAM DEPARTMENT OF PUBLIC WORKS	TYPICAL WATER CONNECTION FOR 1-½" TO 2" SERVICE	DATE: MARCH 2011	DETAIL NO.
		REV: 2	W-2.1.1

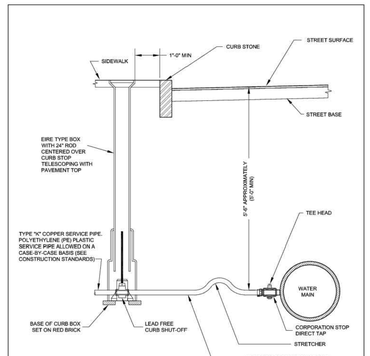

NOT TO SCALE

TOWN OF FRAMINGHAM DEPARTMENT OF PUBLIC WORKS	TYPICAL WATER CONNECTION FOR 1" SERVICE	DATE: MARCH 2010	DETAIL NO.
		REV: 1	W-2.1.0

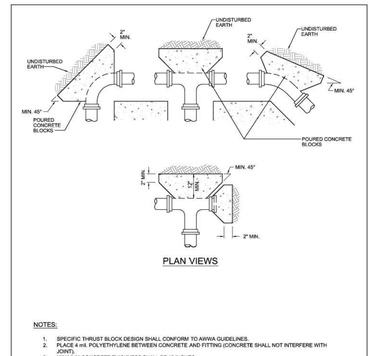

NOTES:

1. SPECIFIC THRUST BLOCK DESIGN SHALL CONFORM TO AWWA GUIDELINES.
2. PLACE 4 mil. POLYETHYLENE BETWEEN CONCRETE AND FITTING (CONCRETE SHALL NOT INTERFERE WITH JOINT).
3. MINIMUM CONCRETE THICKNESS SHALL BE 12 INCHES.
4. THRUST BLOCK ORIENTATION SHALL BE SUCH THAT THE CENTER OF THE FITTING CORRESPONDS WITH THE CENTER OF THE THRUST BLOCK.
5. THE MINIMUM ALLOWABLE ANGLE (EITHER VERTICAL OR HORIZONTAL) SHALL BE 45 DEGREES.

NOT TO SCALE

TOWN OF FRAMINGHAM DEPARTMENT OF PUBLIC WORKS	TYPICAL THRUST BLOCK DETAIL	DATE: SEPT. 2008	DETAIL NO.
		REV: 0	W-2.2.2

SCHEDULE OF TIE RODS		
PIPE SIZE	NUMBER OF RODS PER FITTING	DIAMETER OF RODS
4" - 12"	2	3/4"
16"	4	3/4"
20" - 24"	4	1 1/2"

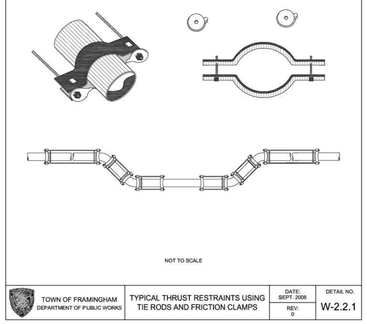

NOT TO SCALE

TOWN OF FRAMINGHAM DEPARTMENT OF PUBLIC WORKS	TYPICAL THRUST RESTRAINTS USING TIE RODS AND FRICTION CLAMPS	DATE: SEPT. 2008	DETAIL NO.
		REV: 0	W-2.2.1

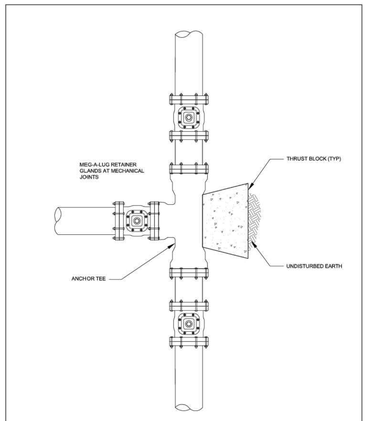

NOT TO SCALE

TOWN OF FRAMINGHAM DEPARTMENT OF PUBLIC WORKS	TYPICAL ANCHOR TEE INSTALLATION	DATE: SEPT. 2008	DETAIL NO.
		REV: 0	W-2.4.1

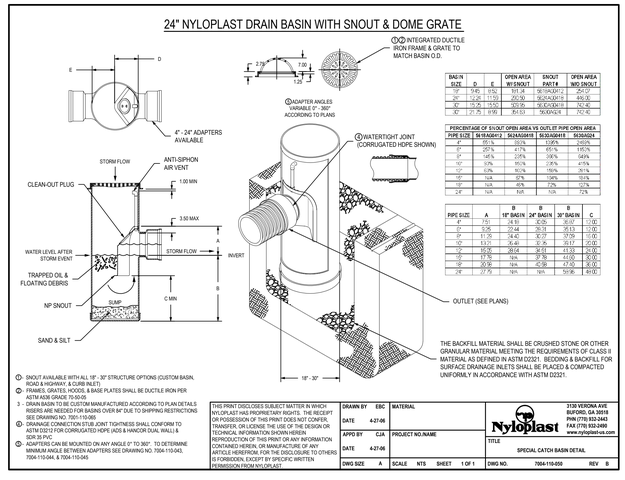

BASIN SIZE	D	E	OPEN AREA W/ SNOUT	SNOUT PART#	OPEN AREA W/O SNOUT
18"	19.25	11.50	161.4	9E7SNOUT18	254.0
24"	12.25	11.50	252.0	9E7SNOUT24	446.0
30"	15.25	13.50	352.6	9E7SNOUT30	742.4
30"	21.75	9.98	354.0	9E6SNOUT24	742.4

PERCENTAGE OF SNOUT OPEN AREA VS OUTLET PIPE OPEN AREA

PIPE SIZE	18 IN BASIN	24 IN BASIN	30 IN BASIN	36 IN BASIN
4"	85.1%	89%	139%	245%
6"	25%	47%	85%	149%
8"	14%	26%	48%	84%
10"	9%	16%	29%	51%
12"	6%	10%	19%	34%
15"	N/A	6%	10%	18%
18"	N/A	4%	7%	12%
24"	N/A	N/A	3%	7%

PIPE SIZE	A	B 15° BASIN	B 24° BASIN	B 30° BASIN	C
4"	7.93	24.93	31.05	36.07	11.00
6"	9.26	27.44	34.31	39.53	11.00
8"	11.75	34.42	42.27	47.79	11.00
10"	13.21	36.40	43.75	49.17	17.00
12"	15.25	39.04	46.13	51.55	23.00
15"	17.92	N/A	47.79	44.00	30.00
18"	20.92	N/A	47.80	47.80	36.00
24"	27.75	N/A	N/A	59.86	49.00

① SNOUT AVAILABLE WITH ALL 18", 30" STRUCTURE OPTIONS (CUSTOM BASIN, ROAD & HIGHWAY, & CURB INLET)
② FRAMES, GRATES, HOODS, & BASE PLATES SHALL BE DUCTILE IRON PER ASTM A536 GRADE 70-50-05
③ DRAIN BASIN TO BE CUSTOM MANUFACTURED ACCORDING TO PLAN DETAILS. RISERS ARE NEEDED FOR BASINS OVER 84" DUE TO SHIPPING RESTRICTIONS SEE DRAWING NO. 7051-110-060
④ DRAINAGE CONNECTION STUB JOINT TIGHTNESS SHALL CONFORM TO ASTM D3212 FOR CORRUGATED HDPE (ADS & HANCOR DUAL WALL) & SDR 35 PVC
⑤ ADAPTERS CAN BE MOUNTED ON ANY ANGLE 0° TO 360°. TO DETERMINE MINIMUM ANGLE BETWEEN ADAPTERS SEE DRAWING NO. 7004-110-043, 7004-110-044, & 7004-110-045

THE BACKFILL MATERIAL SHALL BE CRUSHED STONE OR OTHER GRANULAR MATERIAL MEETING THE REQUIREMENTS OF CLASS II MATERIAL AS DEFINED IN ASTM D2321. BEDDING & BACKFILL FOR SURFACE DRAINAGE INLETS SHALL BE PLACED & COMPACTED UNIFORMLY IN ACCORDANCE WITH ASTM D2321.

THIS PRINT DISCLOSES SUBJECT MATTER IN WHICH NYLOPLAST HAS PROPRIETARY RIGHTS. THE RECEIPT OR POSSESSION OF THIS PRINT DOES NOT CONFER, TRANSFER OR LICENSE THE USE OF THE DESIGN OR TECHNICAL INFORMATION SHOWN HEREIN. REPRODUCTION OF THIS PRINT OR ANY INFORMATION CONTAINED HEREIN, OR MANUFACTURE OF ANY ARTICLE HEREFROM, FOR THE DISCLOSURE TO OTHERS IS FORBIDDEN, EXCEPT BY SPECIFIC WRITTEN PERMISSION FROM NYLOPLAST.

DRAWN BY	ESC	MATERIAL
DATE	4-27-06	
APPD BY	CJA	PROJECT NO./NAME
DATE	4-27-06	
DWG SIZE	A	SCALE NTS SHEET 1 OF 1

Nyloplast
3150 VERONA AVE
BUFORD, GA 30518
PH (770) 932-2618
FAX (770) 932-2460
www.nyloplast-us.com

TITLE: SPECIAL CATCH BASIN DETAIL

DWG NO. 7004-110-050 REV B

Landscape Drain (LD)

4/06

N.T.S. Source: NYLOPLAST

VHB
Vanasse Hangen Brustlin, Inc.
Transportation
Land Development
Environmental Services
Union Station, Suite 219
2 Washington Square
Worcester, Massachusetts 01604
508.752.1001 • FAX 508.752.1276

PLAN INTENT:
THIS PLAN DEPICTS THE PROJECT AT A LEVEL OF DETAIL SUFFICIENT TO MEET THE REQUIREMENTS OF PERMITTING BUT IS NOT INTENDED TO INCLUDE DETAILS SUFFICIENT FOR CONSTRUCTION.

Notes:

1. DETAILS SHOWN HEREON ARE INTENDED TO APPLY ONLY TO WORK SHOWN IN THIS PLANSET, WHICH IS TO BE COMPLETED ON PRIVATE PROPERTY AND NOT WITHIN THE TOWN OF FRAMINGHAM RIGHT OF WAY. SPECIFIC OFF-SITE IMPROVEMENT PLANS WILL BE PREPARED FOR WORK WITHIN TOWN OF FRAMINGHAM RIGHT OF WAY AND THESE PLANS WILL INCLUDE TOWN OF FRAMINGHAM DETAILS.

FRAMINGHAM PLANNING BOARD
DEFINITIVE DEVELOPMENT PLAN APPROVALS

THIS ENDORSEMENT OF THE PLANNING BOARD SHOULD NOT BE CONSTRUED TO BE DETERMINATION OF CONFORMANCE WITH ZONING REGULATIONS.

No.	Revision	Date	Appvd.
2	SPECIAL PERMIT REVISIONS	5/14/13	CCL
1	RESPONSE TO COMMENTS	4/16/13	CCL

Designed by REW Drawn by REW Checked by CCL
CAD checked by CCL Approved by CCL
Scale As Noted Date November 12, 2012

Project Title
Danforth Green

Framingham, Massachusetts
Issued for
Permitting

NOT FOR CONSTRUCTION

Drawing Title
Site Details 3

COMMONWEALTH OF MASSACHUSETTS CRAIG C. LYZOTTE CIVIL No. 49201 REGISTERED PROFESSIONAL ENGINEER

Drawing Number
C-7.3
Sheet 20 of 27
Project Number
12004.00

\\VHB\PROJ\WORCESTER\12004.00\CAD\LD\PLANSET\12004.00-DT

Saved Tuesday, May 14, 2013 1:33:50 PM BIGSNER Plotted Tuesday, May 14, 2013 1:54:08 PM Gesner, Brittany

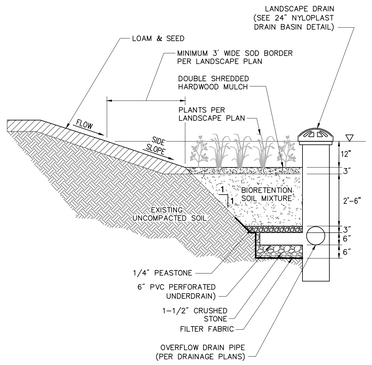

Notes:

1. SURFACE SIDE SLOPES SHALL BE 3:1 MAX. 2% MIN.

Rain Garden with Underdrain

6/08

N.T.S. Source: VHB LD_351

PLANT SPACING ("A")	ROW SPACING ("B")
6 IN. O.C.	5 IN. O.C.
8 IN. O.C.	7 IN. O.C.
10 IN. O.C.	8-1/2 IN. O.C.
12 IN. O.C.	10-1/2 IN. O.C.
15 IN. O.C.	13 IN. O.C.
18 IN. O.C.	16 IN. O.C.

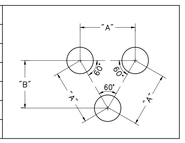

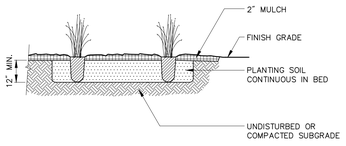

Rain Garden Perennial Plug Planting

11/09

N.T.S. Source: VHB LD_618

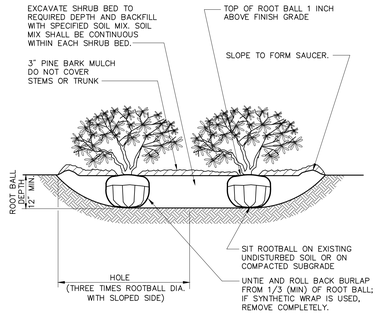

Notes:

1. LOOSEN ROOTS AT THE OUTER EDGE OF ROOTBALL OF CONTAINER GROWN SHRUBS.

Rain Garden Shrub Bed Planting

6/08

N.T.S. Source: VHB REV LD_601

THE INSTALLED CHAMBER SYSTEM SHALL PROVIDE THE LOAD FACTORS SPECIFIED IN THE AASHTO LRFD BRIDGE DESIGN SPECIFICATIONS SECTION 12.12 FOR EARTH AND LIVE LOADS, WITH CONSIDERATION FOR IMPACT AND MULTIPLE VEHICLE PRESENCE.

SC-740 CHAMBER
CHAMBERS SHALL MEET ASTM F 2418-05 "STANDARD SPECIFICATION FOR POLYPROPYLENE (PP) CORRUGATED WALL STORMWATER COLLECTION CHAMBERS".

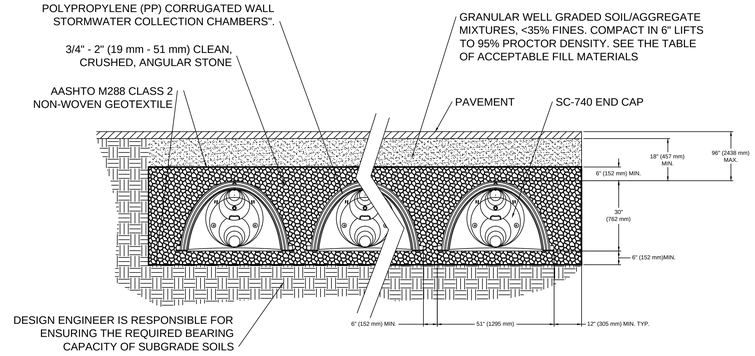

THIS CROSS SECTION DETAILS THE REQUIREMENTS NECESSARY TO SATISFY THE LOAD FACTORS SPECIFIED IN THE AASHTO LRFD BRIDGE DESIGN SPECIFICATIONS SECTION 12.12 FOR EARTH AND LIVE LOADS USING STORMTECH CHAMBERS

Stormtech SC-740 Typical Cross-Section

6/12

N.T.S. Source: Stormtech

Vanasse Hangen Brustlin, Inc.

Transportation
Land Development
Environmental Services

Union Station, Suite 219
2 Washington Square
Worcester, Massachusetts 01604
508.752.1001 • FAX 508.752.1276

PLAN INTENT:
THIS PLAN DEPICTS THE PROJECT AT A LEVEL OF DETAIL SUFFICIENT TO MEET THE REQUIREMENTS OF PERMITTING BUT IS NOT INTENDED TO INCLUDE DETAILS SUFFICIENT FOR CONSTRUCTION.

Notes:

1. DETAILS SHOWN HEREON ARE INTENDED TO APPLY ONLY TO WORK SHOWN IN THIS PLANSET, WHICH IS TO BE COMPLETED ON PRIVATE PROPERTY AND NOT WITHIN THE TOWN OF FRAMINGHAM RIGHT OF WAY. SPECIFIC OFF-SITE IMPROVEMENT PLANS WILL BE PREPARED FOR WORK WITHIN TOWN OF FRAMINGHAM RIGHT OF WAY AND THESE PLANS WILL INCLUDE TOWN OF FRAMINGHAM DETAILS.

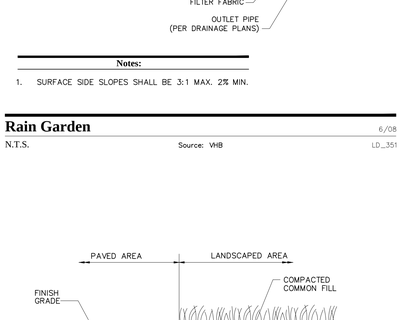

Notes:

1. SURFACE SIDE SLOPES SHALL BE 3:1 MAX. 2% MIN.

Rain Garden

6/08

N.T.S. Source: VHB LD_351

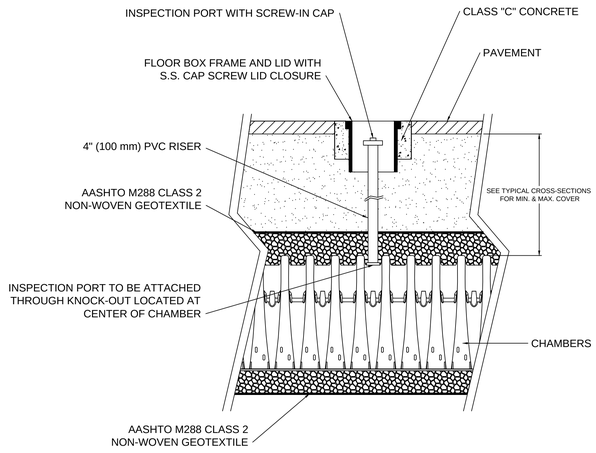

Stormtech Inspection Port Detail

6/12

N.T.S. Source: Stormtech

THE INSTALLED CHAMBER SYSTEM SHALL PROVIDE THE LOAD FACTORS SPECIFIED IN THE AASHTO LRFD BRIDGE DESIGN SPECIFICATIONS SECTION 12.12 FOR EARTH AND LIVE LOADS, WITH CONSIDERATION FOR IMPACT AND MULTIPLE VEHICLE PRESENCES.

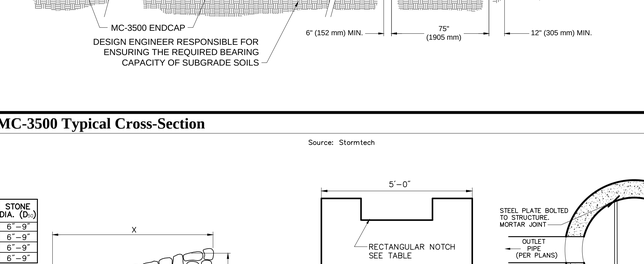

Stormtech MC-3500 Typical Cross-Section

6/12

N.T.S. Source: Stormtech

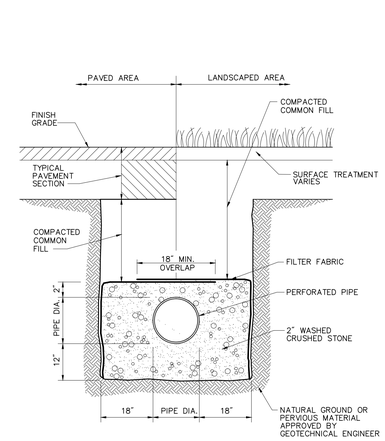

Subsurface Recharge Trench

6/08

N.T.S. Source: VHB LD_181

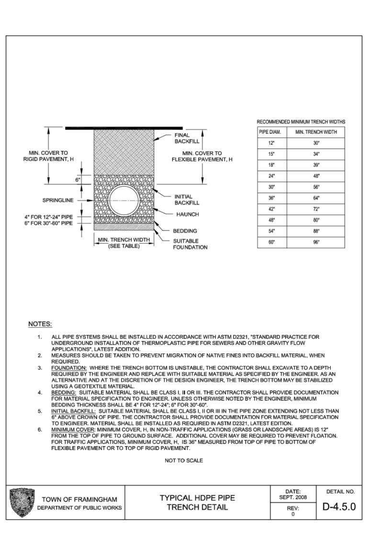

NOTES:

1. ALL PIPE SYSTEMS SHALL BE INSTALLED IN ACCORDANCE WITH ASTM D2321, "STANDARD PRACTICE FOR UNDERGROUND INSTALLATION OF THERMOPLASTIC PIPE FOR SEWERS AND OTHER GRAVITY FLOW APPLICATIONS", LATEST ADDITION.
2. MEASURES SHOULD BE TAKEN TO PREVENT MIGRATION OF NATIVE FINES INTO BACKFILL MATERIAL, WHEN REQUIRED.
3. FOUNDATION: WHERE THE TRENCH BOTTOM IS UNSTABLE, THE CONTRACTOR SHALL EXCAVATE TO A DEPTH DIRECTED BY THE ENGINEER AND REPLACE WITH SUITABLE MATERIAL AS SPECIFIED BY THE ENGINEER, AS AN ALTERNATIVE AND AT THE DISCRETION OF THE DESIGN ENGINEER, THE TRENCH BOTTOM MAY BE STABILIZED USING A GEOTEXTILE MATERIAL.
4. BEDDING: SUITABLE MATERIAL SHALL BE CLASS I, II OR III. THE CONTRACTOR SHALL PROVIDE DOCUMENTATION FOR MATERIAL SPECIFICATION TO ENGINEER, UNLESS OTHERWISE NOTED BY THE ENGINEER, MINIMUM BEDDING THICKNESS SHALL BE 4" FOR 12"-24", 6" FOR 30"-60".
5. INITIAL BACKFILL: SUITABLE MATERIAL SHALL BE CLASS I, II OR III IN THE PIPE ZONE EXTENDING NOT LESS THAN 6" ABOVE CROWN OF PIPE. THE CONTRACTOR SHALL PROVIDE DOCUMENTATION FOR MATERIAL SPECIFICATION TO ENGINEER, UNLESS OTHERWISE NOTED BY THE ENGINEER, COMPACTED TO 95% ASTM D698.
6. MINIMUM COVER, MINIMUM COVER, H, IN NON-TRAFFIC APPLICATIONS (GRASS OR LANDSCAPE AREAS) IS 12" FROM THE TOP OF PIPE TO GROUND SURFACE. ADDITIONAL COVER MAY BE REQUIRED TO PREVENT FLOATION. FOR TRAFFIC APPLICATIONS, MINIMUM COVER, H, IS 36" MEASURED FROM TOP OF PIPE TO BOTTOM OF FLEXIBLE PAVEMENT OR TO TOP OF RIGID PAVEMENT.

NOT TO SCALE

TOWN OF FRAMINGHAM DEPARTMENT OF PUBLIC WORKS	TYPICAL HDPE PIPE TRENCH DETAIL	DATE: SEPT. 2008	DETAIL NO. D-4.5.0
		REV: 0	

Stormtech Detail

6/12

N.T.S. Source: Stormtech

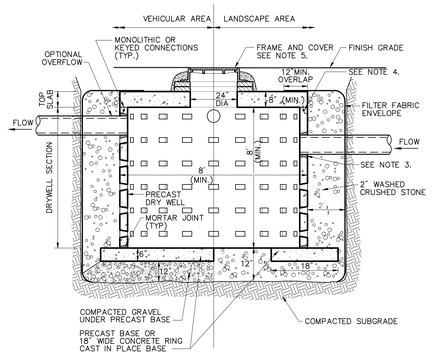

Notes:

1. BASE SECTION SHALL BE PRECAST CONCRETE WITH MORTARED JOINTS OR CAST IN PLACE.
2. ALL COMPONENTS SHALL BE DESIGNED FOR HS-20 LOADING.
3. PROVIDE PRECAST OPENINGS FOR PIPES WITH 2" MAX. CLEARANCE TO OUTSIDE OF PIPE. MORTAR ALL PIPE CONNECTIONS.
4. JOINT SEALANT BETWEEN PRECAST SECTIONS SHALL BE PREFORMED BUTYL RUBBER.
5. FRAME AND COVER SHALL BE SET IN FULL MORTAR BED. ADJUST TO GRADE WITH CLAY BRICK AND MORTAR (2 BRICK COURSE MINIMUM, 5 BRICK COURSE MAXIMUM)

Leaching Chamber

2/09

N.T.S. Source: VHB LD_180

PIPE SIZE	X	Y	Z	STONE DIA. (D_S)
8"	10'	11'	14'	6"-9"
12"	10'	11'	14'	6"-9"
18"	12'	14'	14'	6"-9"
24"	20'	22'	14'	6"-9"

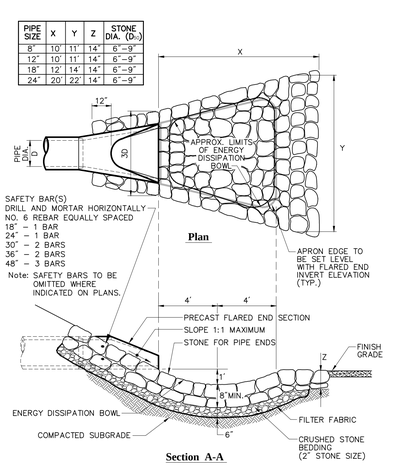

Flared End Section (FES) with Stone Protection

5/12

N.T.S. Source: VHB LD_134

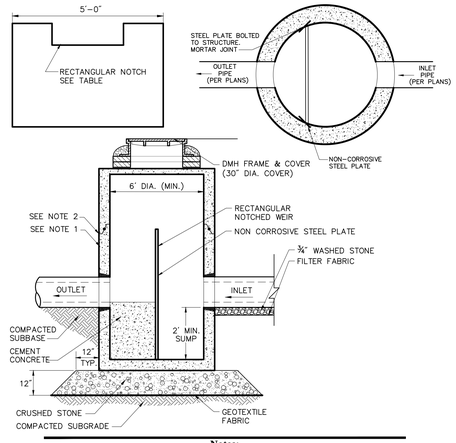

Notes:

1. PROVIDE "V" KNOCKOUTS FOR PIPES WITH 2" MAX. CLEARANCE TO OUTSIDE OF PIPE. MORTAR ALL PIPE CONNECTIONS.
2. JOINT SEALANT BETWEEN PRECAST SECTIONS SHALL BE PREFORMED BUTYL RUBBER.

Outlet Control Structures

N.T.S. Source: VHB LD_163

FRAMINGHAM PLANNING BOARD
DEFINITIVE DEVELOPMENT PLAN APPROVALS

THIS ENDORSEMENT OF THE PLANNING BOARD SHOULD NOT BE CONSTRUED TO BE DETERMINATION OF CONFORMANCE WITH ZONING REGULATIONS.

No.	Revision	Date	Appvd.
2	SPECIAL PERMIT REVISIONS	5/14/13	CCL
1	RESPONSE TO COMMENTS	4/16/13	CCL

Designed by REW | Drawn by REW | Checked by CCL
CAD checked by CCL | Approved by CCL
Scale As Noted | Date November 12, 2012

Project Title
Danforth Green

Framingham, Massachusetts

Issued for
Permitting

NOT FOR CONSTRUCTION

Drawing Title
Site Details 4

Drawing Number
C-7.4

Sheet 21 of 27

Project Number
12004.00

COMMONWEALTH OF MASSACHUSETTS
CRAIG C. LIZOTTE
CIVIL
No. 39081
REGISTERED PROFESSIONAL ENGINEER

Saved Tuesday, May 14, 2013 1:33:50 PM BGESNER Plotted Tuesday, May 14, 2013 1:54:13 PM Gesner, Brittany

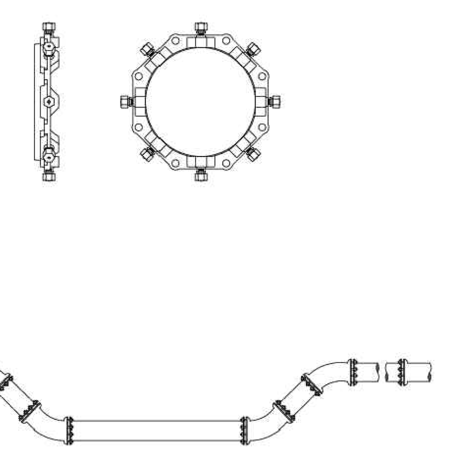

NOTES:

1. DEVICES NEED TO BE PLACED BEYOND THE AREA OF RESTRAINTS IN ACCORDANCE WITH MANUFACTURES RECOMMENDATIONS.

NOT TO SCALE

TOWN OF FRAMINGHAM DEPARTMENT OF PUBLIC WORKS	TYPICAL THRUST RESTRAINT WEDGE ACTION TYPE JOINTS	DATE: SEPT. 2008 / REV: 0	DETAIL NO. W-2.2.0

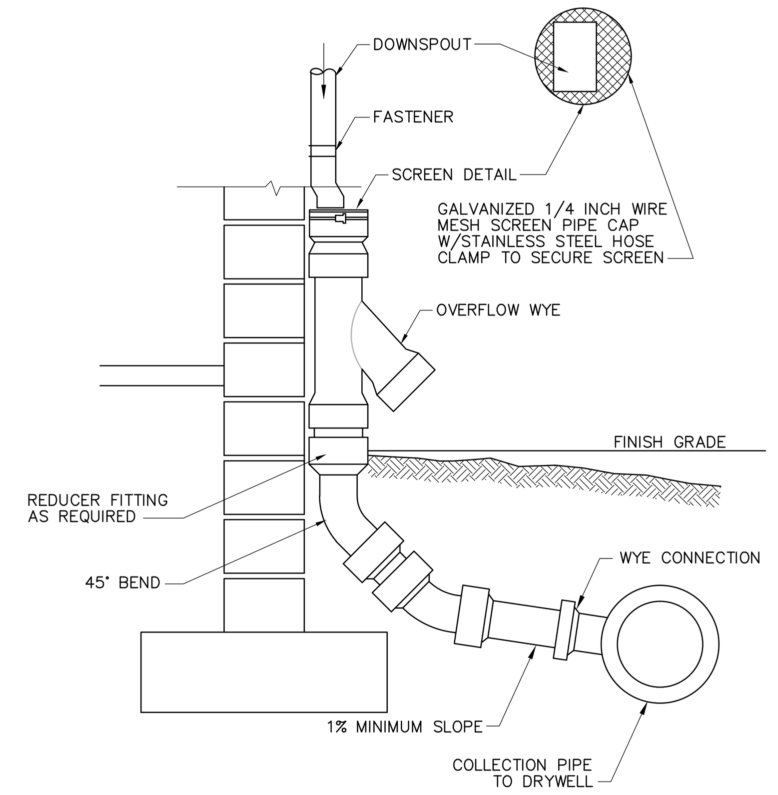

Downspout Rain Leader (Typ)
6/08

N.T.S. Source: VHB LD_195

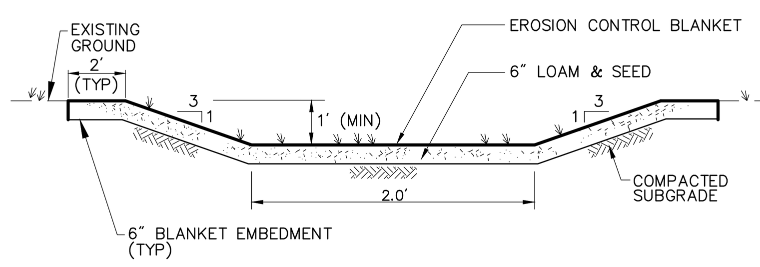

Grassed Swale
6/08

N.T.S. Source: VHB LD_171

Rinker MATERIALS — Concrete Pipe Division

STC 900 Precast Concrete Stormceptor® (900 U.S. Gallon Capacity)

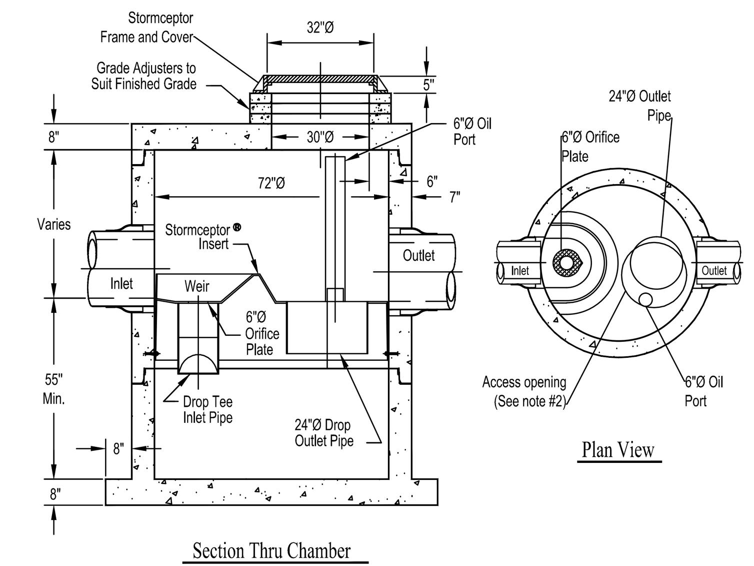

Notes:
1. The Use Of Flexible Connection is Recommended at The Inlet and Outlet Where Applicable.
2. The Cover Should be Positioned Over The Outlet Drop Pipe and The Oil Port.
3. The Stormceptor System is protected by one or more of the following U.S. Patents: #4985148, #5498331, #5725760, #5753115, #5849181, #6068765, #6371690.
4. Contact a Concrete Pipe Division representative for further details not listed on this drawing.

Rinker 028

Stormceptor Model: STC 900 (WQU)
6/12

N.T.S. Source: Rinker Materials

Rinker MATERIALS — Concrete Pipe Division

STC 450i Precast Concrete Stormceptor® (450 U.S. Gallon Capacity)

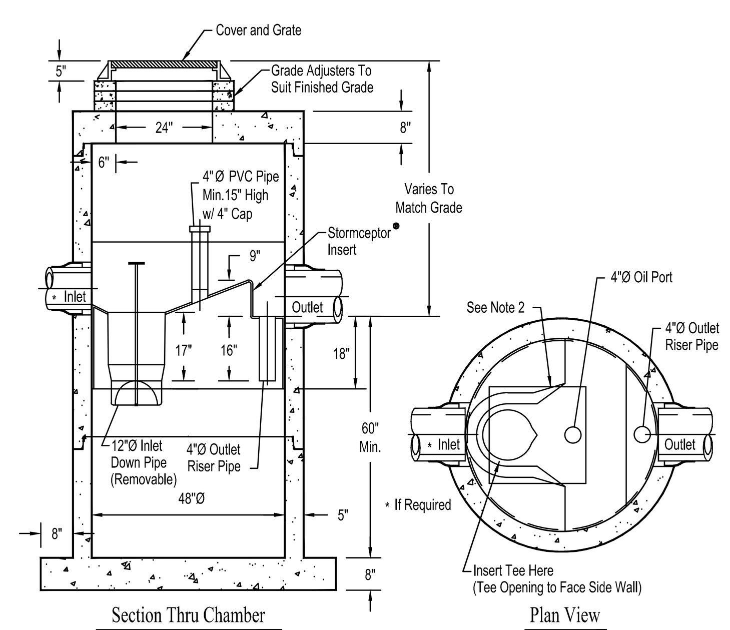

Notes:
1. The Use Of Flexible Connection is Recommended at The Inlet and Outlet Where Applicable.
2. The Cover Should be Positioned Over The Inlet Drop Pipe and The Oil Port.
3. The Stormceptor System is protected by one or more of the following U.S. Patents: #4985148, #5498331, #5725760, #5753115, #5849181, #6068765, #6371690.
4. Contact a Concrete Pipe Division representative for further details not listed on this drawing.

Rinker 027

Stormceptor Model: STC 450 (WQU)
6/12

N.T.S. Source: Rinker Materials

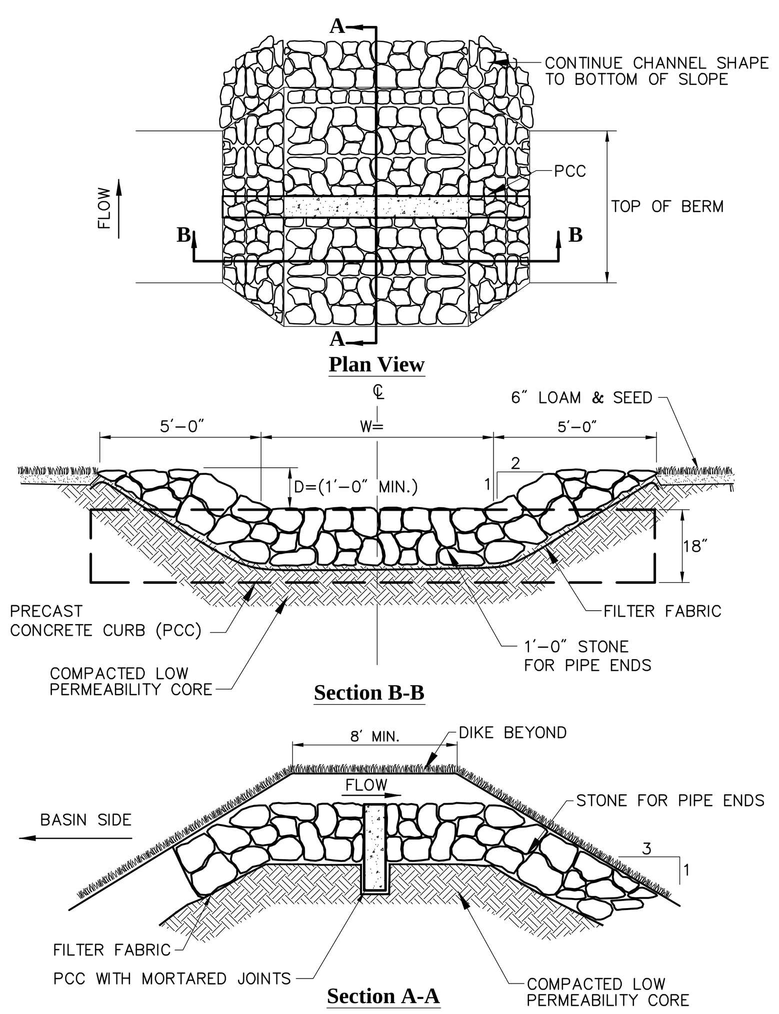

Overflow Stone Swale
6/08

N.T.S. Source: VHB LD_161

TRENCH PAY LIMIT TABLE FOR MANHOLES AND CATCH BASINS

WALL THICKNESS	MAX TRENCH WIDTH
LESS THAN 6"	I.D. + 5'-0"
6" TO 12"	I.D. + 6'-0"
13" TO 18"	I.D. + 7'-0"
19" & GREATER	O.D. + 6'-0"

I.D. = INSIDE DIMENSION
O.D. = OUTSIDE DIMENSION

FOR TRENCHES GREATER THAN 5' DEEP ADD 3' FOR TEMPORARY SUPPORT OF EXCAVATION

GENERAL CATCH BASIN NOTES:

1. FACE OF PIPE SHALL NOT PROJECT MORE THAN 4-INCHES FROM FACE OF WALL ALONG CENTERLINE OF PIPE.
2. DESIGN PRECAST SECTIONS WITH FRAME AND GRATE FOR AASHTO H20 LOADING UNLESS OTHERWISE NOTED.
3. PRECAST TOP SLAB OPENING CAN BE CENTERED OR OFFSET AS NECESSARY.
4. GRATE VANES SHALL BE INSTALLED IN DIRECTION TO RECEIVE FLOWS.
5. CATCH BASIN BASE SHALL BE SOLID (NO HOLE IN CENTER) IF THE SEASONAL HIGH GROUNDWATER TABLE IS LESS THAN 2 FEET BELOW THE BASE.

TABLE 1

MANHOLE DIAMETER	SIDE WALL MIN. THICKNESS	BOTTOM SLAB MIN. THICKNESS	MAX PIPE DIAMETER * RCP	MAX PIPE DIAMETER * DI/PVC
4'	5"	6"	24"	30"
5'	6"	8"	36"	42"
6'	6"	8"	48"	54"
8'	8"	8"	66"	72"
10'	10"	10"	72"	84"

* MAY VARY DEPENDING ON SIZE AND LOCATION OF ADDITIONAL PENETRATIONS OR RELATIONSHIP OF PENETRATIONS IN MANHOLE

MANHOLE GENERAL NOTES:

1. DRAIN MANHOLE DIAMETER SHALL BE 4', 5', 6', 8' OR 10' AS SHOWN ON PLAN/PROFILE VIEWS.
2. DESIGN PRECAST SECTIONS WITH FRAME AND COVER FOR AASHTO H20 LOADINGS UNLESS OTHERWISE NOTED.
3. MANHOLES LARGER THAN 4' IN DIAMETER AT THE BASE SHALL BE REDUCED IN DIAMETER TO 4' AT THE NEXT RISER SECTION UNLESS NOTED OTHERWISE ON PLANS.

TOWN OF FRAMINGHAM DEPARTMENT OF PUBLIC WORKS	MANHOLES & CATCH BASINS GENERAL NOTES AND DIMENSIONS	DATE: MARCH 2011 / REV: 1	DETAIL NO. D-4.3.0

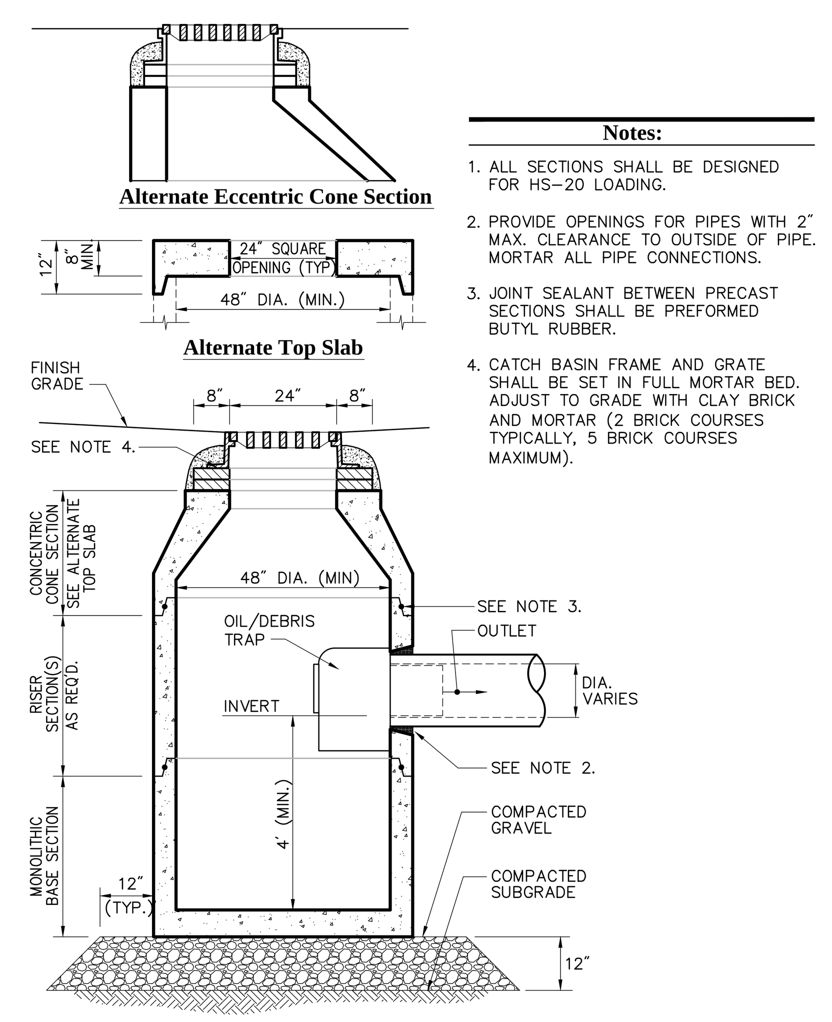

Notes:

1. ALL SECTIONS SHALL BE DESIGNED FOR HS-20 LOADING.
2. PROVIDE OPENINGS FOR PIPES WITH 2" MAX. CLEARANCE TO OUTSIDE OF PIPE. MORTAR ALL PIPE CONNECTIONS.
3. JOINT SEALANT BETWEEN PRECAST SECTIONS SHALL BE PREFORMED BUTYL RUBBER.
4. CATCH BASIN FRAME AND GRATE SHALL BE SET IN FULL MORTAR BED. ADJUST TO GRADE WITH CLAY BRICK AND MORTAR (2 BRICK COURSES TYPICALLY, 5 BRICK COURSES MAXIMUM).

Catch Basin (CB) With Oil/Debris Trap
6/08

N.T.S. Source: VHB LD_101

TOWN OF FRAMINGHAM DEPARTMENT OF PUBLIC WORKS	TYPICAL DRAIN MANHOLE	DATE: MARCH 2012 / REV: 3	DETAIL NO. D-4.2.0

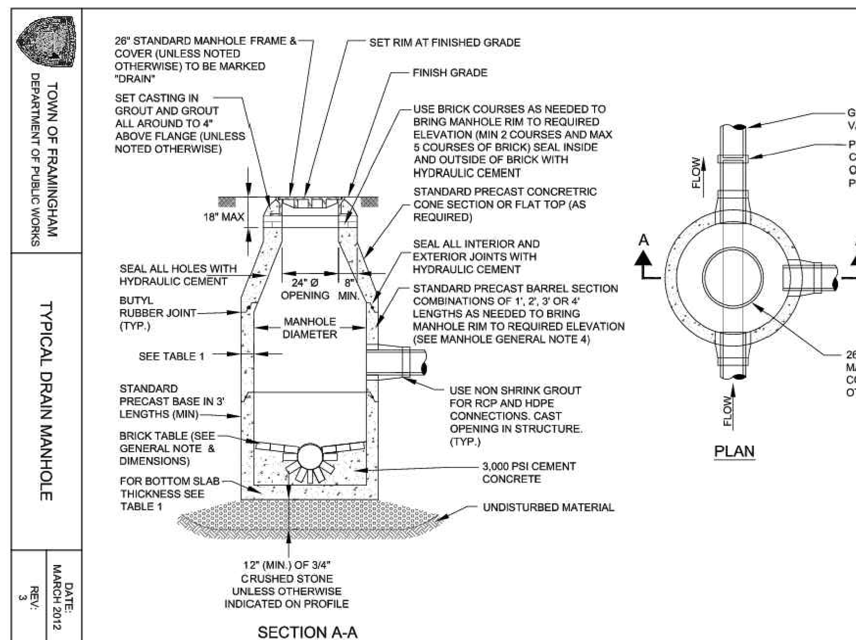

NOT TO SCALE

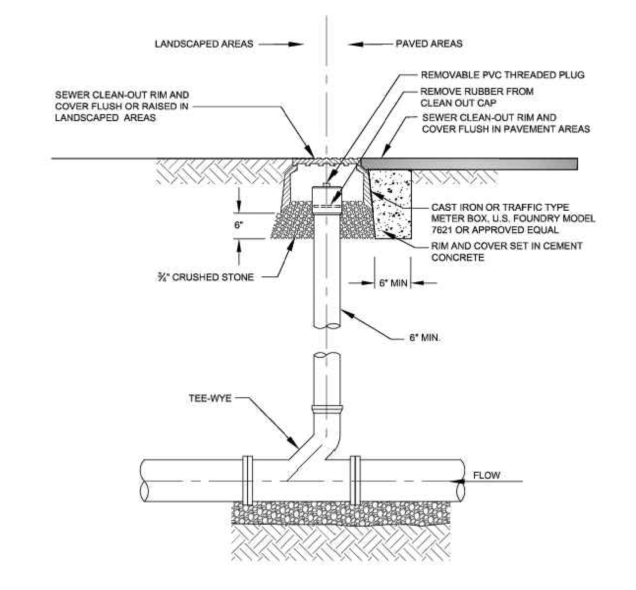

NOTES:

1. PLACE CLEAN OUT WITHIN 5 FEET OF HOUSE FOUNDATION.
2. CLEAN OUT SHALL BE ACCESSIBLE AT ALL TIMES.
3. 6" MIN. LAYER OF ¾" CRUSHED STONE 12" IN LEDGE.
4. FLUSH MOUNT BOLT-DOWN BOX ACCEPTABLE UPON SPECIFIC APPROVAL BY DPW.

NOT TO SCALE

TOWN OF FRAMINGHAM DEPARTMENT OF PUBLIC WORKS	SEWER SERVICE CLEAN OUT	DATE: MARCH 2012 / REV: 1	DETAIL NO. S-3.2.0

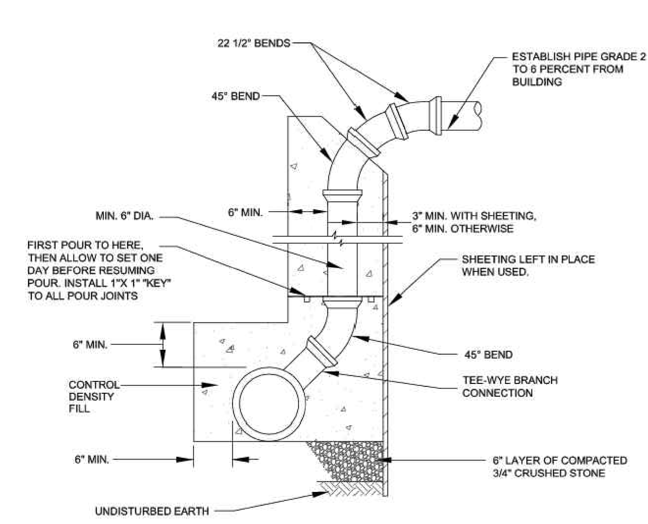

NOTE:

1. SEE SECTION 3.3.1.7.D.

NOT TO SCALE

TOWN OF FRAMINGHAM DEPARTMENT OF PUBLIC WORKS	CHIMNEY	DATE: MAR. 2012 / REV: 1	DETAIL NO. S-3.1.2

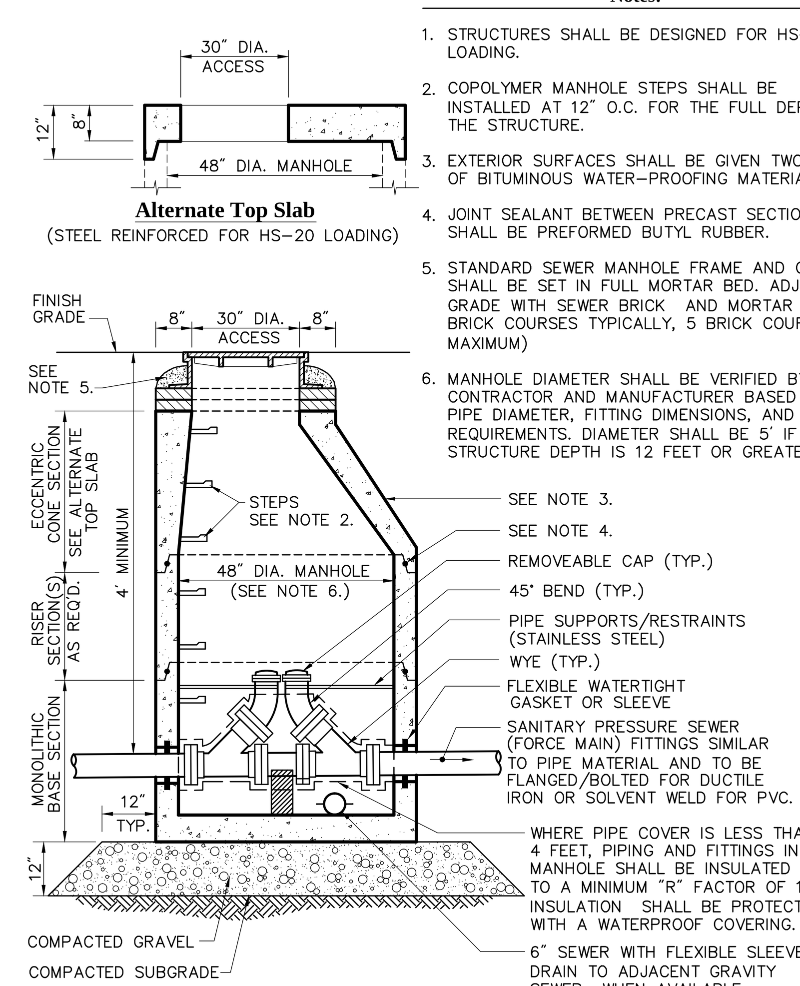

Notes:

1. STRUCTURES SHALL BE DESIGNED FOR HS-20 LOADING.
2. COPOLYMER MANHOLE STEPS SHALL BE INSTALLED AT 12" O.C. FOR THE FULL DEPTH OF THE STRUCTURE.
3. EXTERIOR SURFACES SHALL BE GIVEN TWO COATS OF BITUMINOUS WATER-PROOFING MATERIAL.
4. JOINT SEALANT BETWEEN PRECAST SECTIONS SHALL BE PREFORMED BUTYL RUBBER.
5. STANDARD SEWER MANHOLE FRAME AND COVER SHALL BE SET IN FULL MORTAR BED. ADJUST TO GRADE WITH SEWER BRICK AND MORTAR (2 BRICK COURSES TYPICALLY, 5 BRICK COURSES MAXIMUM)
6. MANHOLE DIAMETER SHALL BE VERIFIED BY CONTRACTOR AND MANUFACTURER BASED ON PIPE DIAMETER, FITTING DIMENSIONS, AND LOCAL REQUIREMENTS. DIAMETER SHALL BE 5' IF STRUCTURE DEPTH IS 12 FEET OR GREATER.

Sanitary Pressure Sewer Cleanout Manhole (SMH-CO)
6/08

N.T.S. Source: VHB LD_206

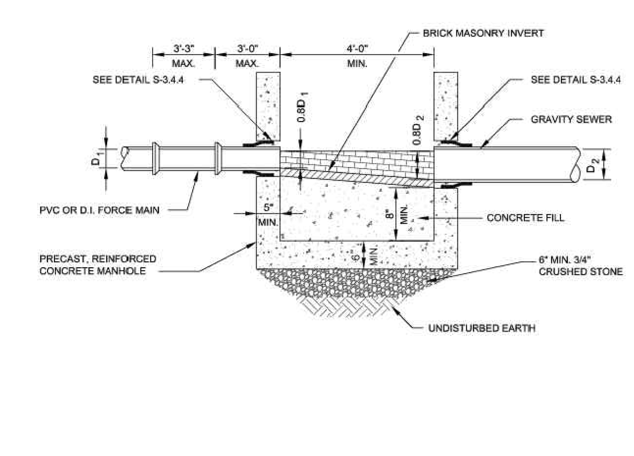

NOT TO SCALE

TOWN OF FRAMINGHAM DEPARTMENT OF PUBLIC WORKS	FORCEMAIN MANHOLE	DATE: SEPT. 2008 / REV: 0	DETAIL NO. S-3.4.2

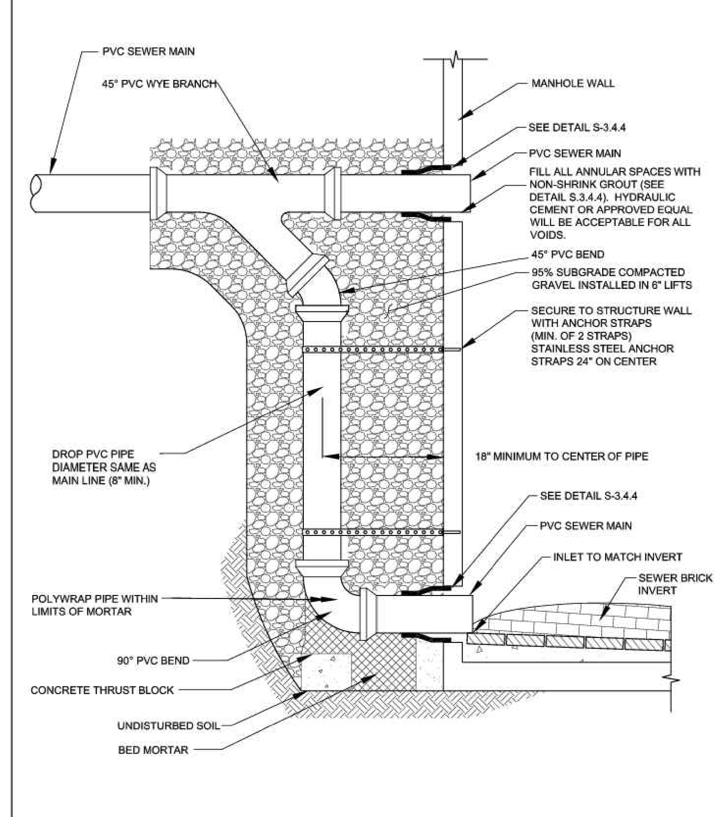

NOT TO SCALE

TOWN OF FRAMINGHAM DEPARTMENT OF PUBLIC WORKS	TYPICAL DROP MANHOLE (OUTSIDE)	DATE: MARCH 2012 / REV: 3	DETAIL NO. S-3.4.1

VHB
Vanasse Hangen Brustlin, Inc.

Transportation
Land Development
Environmental Services

Union Station, Suite 219
2 Washington Square
Worcester, Massachusetts 01604
508.752.1001 • FAX 508.752.1276

PLAN INTENT:
THIS PLAN DEPICTS THE PROJECT AT A LEVEL OF DETAIL SUFFICIENT TO MEET THE REQUIREMENTS OF PERMITTING BUT IS NOT INTENDED TO INCLUDE DETAILS SUFFICIENT FOR CONSTRUCTION.

Notes:

1. DETAILS SHOWN HEREON ARE INTENDED TO APPLY ONLY TO WORK SHOWN IN THIS PLANSET, WHICH IS TO BE COMPLETED ON PRIVATE PROPERTY AND NOT WITHIN THE TOWN OF FRAMINGHAM RIGHT OF WAY. SPECIFIC OFF-SITE IMPROVEMENT PLANS WILL BE PREPARED FOR WORK WITHIN TOWN OF FRAMINGHAM RIGHT OF WAY AND THESE PLANS WILL INCLUDE TOWN OF FRAMINGHAM DETAILS.

FRAMINGHAM PLANNING BOARD
DEFINITIVE DEVELOPMENT PLAN APPROVALS

THIS ENDORSEMENT OF THE PLANNING BOARD SHOULD NOT BE CONSTRUED TO BE DETERMINATION OF CONFORMANCE WITH ZONING REGULATIONS.

No.	Revision	Date	Appvd.
2	SPECIAL PERMIT REVISIONS	5/14/13	CCL
1	RESPONSE TO COMMENTS	4/16/13	CCL

Designed by JWD | Drawn by JWD | Checked by CCL
CAD checked by JWD | Approved by CCL
Scale As Noted | Date November 12, 2012

Project Title
Danforth Green

Framingham, Massachusetts

Issued for
Permitting

NOT FOR CONSTRUCTION

Drawing Title
Site Details 5

Drawing Number
C-7.5

Sheet 22 of 27

Project Number
12004.00

Saved Tuesday, May 14, 2013 1:33:50 PM BGESNER Plotted Tuesday, May 14, 2013 1:54:16 PM Gesner, Brittany

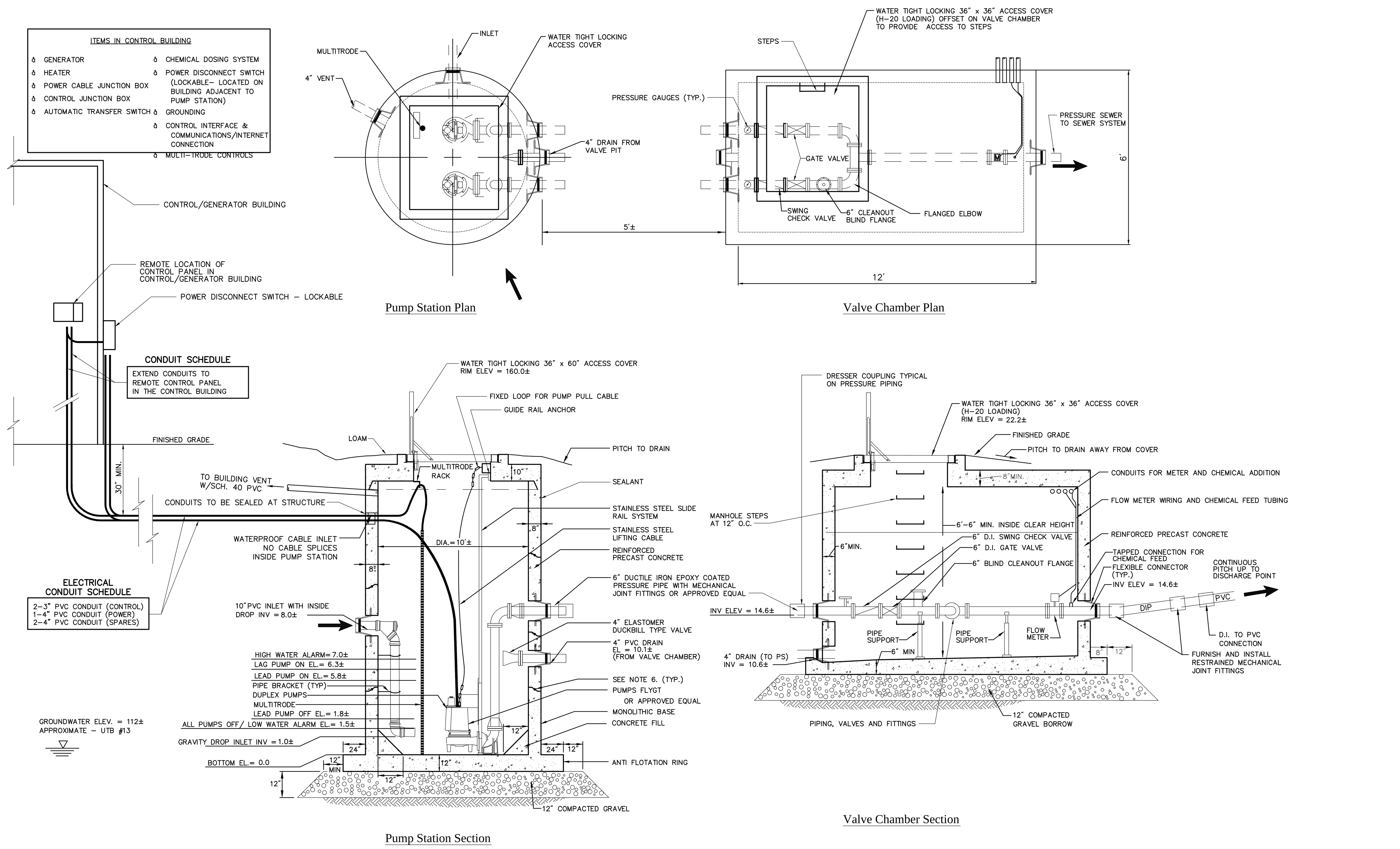

Typical Sewer Pump Station

REV

SEWER PUMP STATION INTENT AND DESIGN CRITERIA

INTENT THE SEWER PUMP STATION DETAIL PRESENTED HEREIN IS INTENDED TO REPRESENT THE GENERAL CONFIGURATION AND MINIMUM CRITERIA FOR THE PROJECT. IT IS ASSUMED THAT THE OWNER AND CONTRACTOR WILL WORK WITH MULTIPLE SEWER PUMP STATION PACKAGE MANUFACTURERS TO DETERMINE THE BEST PRODUCT FOR THIS APPLICATION. THE OWNER, CONTRACTOR, AND PACKAGED PUMP STATION MANUFACTURER WILL BE RESPONSIBLE FOR SUBMITTING DETAILED CONSTRUCTION PLANS FOR REVIEW AND APPROVAL BY THE ENGINEER, OWNER, AND THE TOWN OF FRAMINGHAM DPW.

DESIGN CRITERIA THE FOLLOWING DESIGN CRITERIA SHALL APPLY TO THE PUMP STATION:
1. PUMP STATION SHALL BE GENERALLY CONFIGURED AS SHOWN HEREON
2. PUMP STATION SHALL HAVE DUPLEX PUMPS AND A BACK UP GENERATOR. BACK UP GENERATOR SHALL BE POWERED BY DIESEL FUEL OR PROPANE AND SHALL BE ENCLOSED IN A FULLY SOUND INSULATED ENCLOSURE APPROVED BY OWNER
3. SEWAGE VELOCITY IN FORCE MAIN SHALL BE 2 FEET PER SECOND MINIMUM AND 4 FEET PER SECOND MAXIMUM
4. PUMP STATION SHALL BE FULLY AUTOMATED AND ALARMED AND SHALL HAVE FULL REMOTE ACCESS, MONITORING, AND OPERATIONAL CAPABILITIES
5. PUMP STATION SHALL COMPLY WITH ALL APPLICABLE MA DEP AND TOWN OF FRAMINGHAM RULES AND REGULATIONS
6. PUMP STATION SHALL BE COMPLIANT WITH ALL REQUIREMENTS AND CONDITIONS SET FORTH IN THE SEWER CONNECTION PERMIT ISSUED BY MA DEP ON JULY 15, 2010 AS AMENDED
7. PUMP STATION TO BE FITTED WITH FULLY AUTOMATIC CHEMICAL INJECTION SYSTEM TO PREVENT BUILD UP OF HYDROGEN SULFIDE AND OTHER CORROSIVE AGENTS
8. PUMP STATION TO INCLUDE CONTROL BUILDING, WITH ARCHITECTURE APPROVED BY OWNER, TO HOUSE CHEMICAL DOSING SYSTEM AND ELECTRICAL GEAR AND CONTROLS
9. SEE PLANS FOR INVERT ELEVATIONS

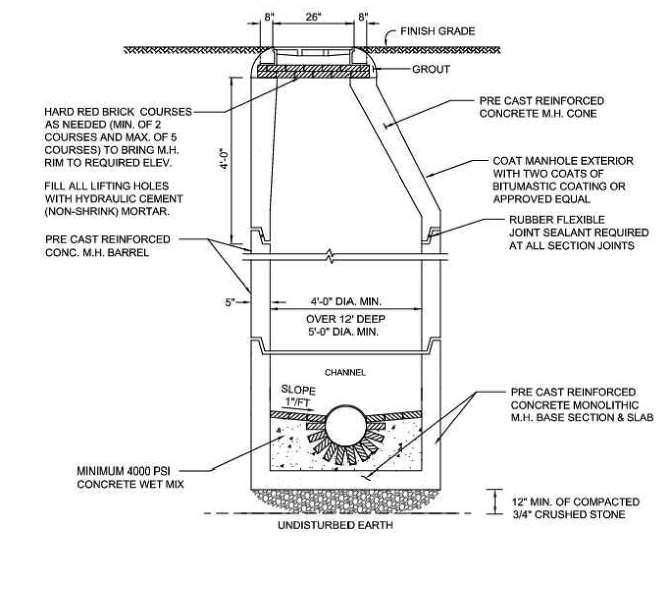

NOTES:
1. TYPICAL SANITARY MANHOLE TO BE 4 FEET IN DIAMETER.
2. 5'-0" DIAMETER FOR ALL MANHOLE DEPTHS GREATER THAN 12 FEET OR WHEN ORDERED BY THE ENGINEER.
3. 6" MIN. WALL THICKNESS AND 7" MIN. BASE THICKNESS WITH 5'-0" DIAMETER MANHOLES.
4. INNER EDGE OF BRICK TABLE TO BE AT ELEVATION OF CROWN OF TOP OF PIPE.
5. DESIGN LOAD - HS20.
6. ALL INVERTS SHALL BE 4,000 PSI CEMENT CONCRETE IN VOID AREAS AND RED SEWER BRICK CONSTRUCTION.
7. INVERTS SHALL NOT BE BUILT ABOVE GRADE. ALL INVERTS SHALL BE BUILT IN PLACE AFTER ALL PIPES HAVE BEEN INSTALLED.

NOT TO SCALE

TOWN OF FRAMINGHAM DEPARTMENT OF PUBLIC WORKS	TYPICAL SEWER MANHOLE	DATE: MARCH 2012 REV: 2	DETAIL NO. S-3.4.0

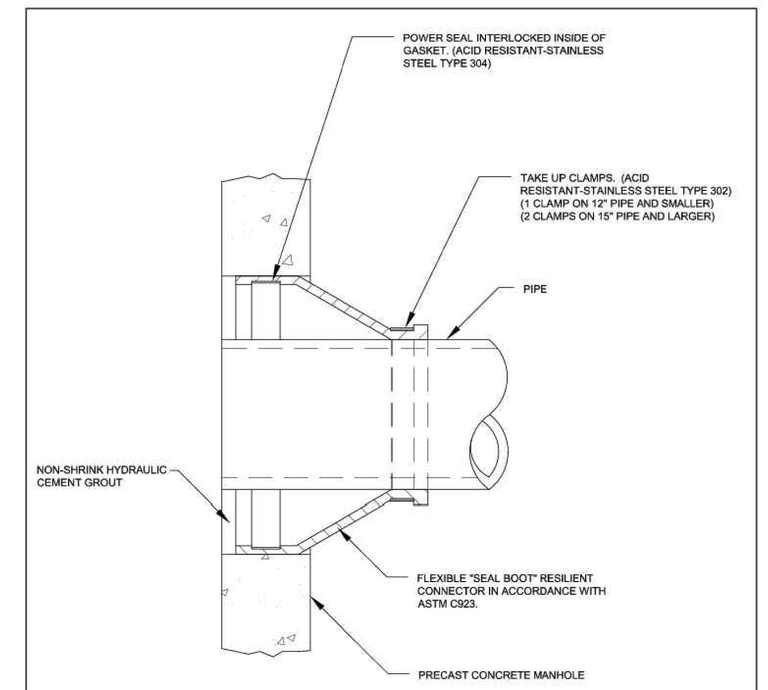

NOT TO SCALE

TOWN OF FRAMINGHAM DEPARTMENT OF PUBLIC WORKS	MANHOLE SEAL (TYPICAL)	DATE: MARCH 2011 REV: 2	DETAIL NO. S-3.4.4

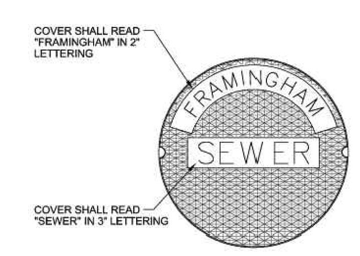

NOTES:
1. COVER LETTERING DETAIL APPLIES TO ALL COVER SIZES AND WATERTIGHT MANHOLE COVERS IN ACCORDANCE WITH NOTES IN TYPICAL MANHOLE DETAIL.
2. ALL COVERS MUST BE MIN. 26 INCH WIDE.
3. ALL FRAMES MUST BE MIN. 6 INCH HIGH.

NOT TO SCALE

TOWN OF FRAMINGHAM DEPARTMENT OF PUBLIC WORKS	SEWER MANHOLE COVER	DATE: MARCH 2011 REV: 1	DETAIL NO. S-3.4.3

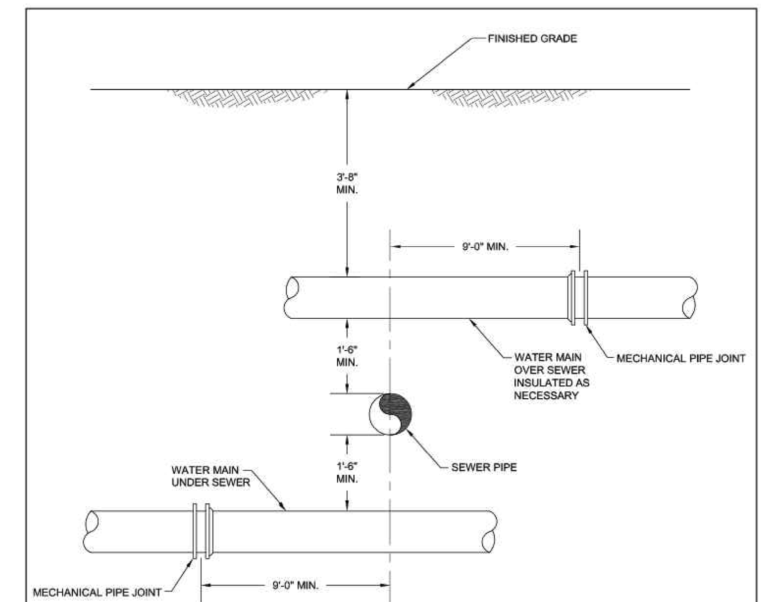

NOTES:
1. SEWERS SHALL BE KEPT REMOTE FROM WATER SUPPLY PIPING AND STRUCTURES. WHEREVER FEASIBLE, SEWERS SHOULD BE LAID AT A MINIMUM HORIZONTAL DISTANCE OF 10 FEET FROM WATER MAINS. IF LOCAL CONDITIONS PREVENT THIS, THE WATER MAIN SHOULD BE LAID IN A SEPARATE TRENCH, AND THE ELEVATIONS OF THE CROWN OF THE SEWER PLACED AT LEAST 18 INCHES BELOW THE INVERT OF THE WATER MAIN.
2. WHENEVER SEWERS MUST CROSS UNDER WATER MAINS, THE CROWN OF THE SEWER SHOULD BE PLACED A MINIMUM OF 18 INCHES BELOW THE INVERT OF THE WATER MAIN. IN ADDITION, THE WATER MAIN MUST BE CONSTRUCTED WITH ONE FULL LENGTH OF PIPE CENTERED ABOVE THE CROSSING. THE WATER PIPE SHALL HAVE MECHANICAL JOINTS FOR A MINIMUM DISTANCE OF 10 FEET ON EACH SIDE OF THE CROSSING.
3. WHEN IT IS IMPOSSIBLE TO OBTAIN HORIZONTAL OR VERTICAL SEPARATION AS STIPULATED ABOVE, BOTH THE WATER AND THE SEWER PIPING SHALL BE CONSTRUCTED SUCH THAT THE PIPE JOINTS ARE PLACED AS FAR AWAY FROM THE CROSSING AS POSSIBLE AND THE PIPE CROSSING SHALL BE ENCASED IN CONTROL DENSITY FILL FOR A DISTANCE OF 10 FEET ON ALL SIDES OF THE CROSSING.
4. SEE SECTION 3.3.1.2 PIPE INSTALLATION.

NOT TO SCALE

TOWN OF FRAMINGHAM DEPARTMENT OF PUBLIC WORKS	SEWER CROSSING	DATE: MAR. 2012 REV: 1	DETAIL NO. S-3.5.0

Vanasse Hangen Brustlin, Inc.
Transportation
Land Development
Environmental Services
Union Station, Suite 219
2 Washington Square
Worcester, Massachusetts 01604
508.752.1001 • FAX 508.752.1276

PLAN INTENT:
THIS PLAN DEPICTS THE PROJECT AT A LEVEL OF DETAIL SUFFICIENT TO MEET THE REQUIREMENTS OF PERMITTING BUT IS NOT INTENDED TO INCLUDE DETAILS SUFFICIENT FOR CONSTRUCTION.

Notes:

1. DETAILS SHOWN HEREON ARE INTENDED TO APPLY ONLY TO WORK SHOWN IN THIS PLANSET, WHICH IS TO BE COMPLETED ON PRIVATE PROPERTY AND NOT WITHIN THE TOWN OF FRAMINGHAM RIGHT OF WAY. SPECIFIC OFF-SITE IMPROVEMENT PLANS WILL BE PREPARED FOR WORK WITHIN TOWN OF FRAMINGHAM RIGHT OF WAY AND THESE PLANS WILL INCLUDE TOWN OF FRAMINGHAM DETAILS.

FRAMINGHAM PLANNING BOARD
DEFINITIVE DEVELOPMENT PLAN APPROVALS

THIS ENDORSEMENT OF THE PLANNING BOARD SHOULD NOT BE CONSTRUED TO BE DETERMINATION OF CONFORMANCE WITH ZONING REGULATIONS.

No.	Revision	Date	Appvd.
2	SPECIAL PERMIT REVISIONS	5/14/13	CCL
1	RESPONSE TO COMMENTS	4/16/13	CCL

Designed by JWD | Drawn by JWD | Checked by CCL
CAD checked by JWD | Approved by CCL
Scale As Noted | Date November 12, 2012

Project Title
Danforth Green

Framingham, Massachusetts

Issued for
Permitting

NOT FOR CONSTRUCTION

Drawing Title
Site Details 6

COMMONWEALTH OF MASSACHUSETTS CRAIG C. LIZOTTE CIVIL No. 39817 REGISTERED PROFESSIONAL ENGINEER

Drawing Number
C-7.6

Sheet 23 of 27

Project Number
12004.00

Saved Tuesday, May 14, 2013 1:14:14 PM BIESNER Plotted Tuesday, May 14, 2013 1:7:12 PM Gesmer, Brittany

Landscape Notes

1. REFER TO PLANS BY LANDSCAPE ARCHITECT FOR ALL PLANTINGS AND LANDSCAPE EXCEPT THOSE AREAS SHOWN HEREON.
2. ALL PROPOSED PLANTING LOCATIONS SHALL BE STAKED AS SHOWN ON THE PLANS FOR FIELD REVIEW AND APPROVAL BY THE LANDSCAPE ARCHITECT PRIOR TO INSTALLATION.
3. CONTRACTOR SHALL VERIFY LOCATIONS OF ALL BELOW GRADE AND ABOVE GROUND UTILITIES AND NOTIFY OWNERS REPRESENTATIVE OF CONFLICTS.
4. NO PLANT MATERIALS SHALL BE INSTALLED UNTIL ALL GRADING AND CONSTRUCTION HAS BEEN COMPLETED IN THE IMMEDIATE AREA. CONTRACTOR SHALL NOTIFY OWNER'S REPRESENTATIVE OF ANY CONFLICT.
5. ALL SMALL TREES SHALL BE PROTECTED WITH MINIMUM 2' HT. BLACK MESH TREE GUARDS, INSTALLED PER MANUFACTURER'S INSTRUCTIONS. OTHER MEANS TO PROTECT SMALL TREES FROM ANIMALS AND MAINTENANCE EQUIPMENT MUST BE APPROVED BY THE CIVIL ENGINEER PRIOR TO INSTALLATION.
6. A 3-INCH DEEP MULCH PER SPECIFICATION SHALL BE INSTALLED UNDER ALL TREES AND SHRUBS, AND IN ALL PLANTING BEDS, UNLESS OTHERWISE INDICATED ON THE PLANS, OR AS DIRECTED BY OWNER'S REPRESENTATIVE.
7. FINAL QUANTITY FOR EACH PLANT TYPE SHALL BE AS GRAPHICALLY SHOWN ON THE PLAN. THIS NUMBER SHALL TAKE PRECEDENCE IN CASE OF ANY DISCREPANCY BETWEEN QUANTITIES SHOWN ON THE PLANT LIST AND ON THE PLAN. THE CONTRACTOR SHALL REPORT ANY DISCREPANCIES BETWEEN THE NUMBER OF PLANTS SHOWN ON THE PLANT LIST AND PLANT LABELS PRIOR TO BIDDING.
8. ANY PROPOSED PLANT SUBSTITUTIONS MUST BE REVIEWED BY LANDSCAPE ARCHITECT AND APPROVED IN WRITING BY THE OWNER'S REPRESENTATIVE.
9. ALL PLANT MATERIALS INSTALLED SHALL MEET THE SPECIFICATIONS OF THE "AMERICAN STANDARDS FOR NURSERY STOCK" BY THE AMERICAN ASSOCIATION OF NURSERYMEN AND CONTRACT DOCUMENTS.
10. ALL PLANT MATERIALS SHALL BE GUARANTEED FOR ONE YEAR FOLLOWING DATE OF FINAL ACCEPTANCE.
11. THIS PLAN IS INTENDED FOR PLANTING PURPOSES. REFER TO SITE / CIVIL DRAWINGS FOR ALL OTHER SITE CONSTRUCTION INFORMATION.

Rain Garden Construction Notes

1. RAIN GARDEN SHALL NOT BE PLACED ON-LINE UNTIL THE ENTIRE CONTRIBUTING DRAINAGE AREA HAS BEEN STABILIZED. THE RAIN GARDEN AREA SHALL BE PROTECTED FROM SEDIMENT LADEN RUNOFF.
2. THE RAIN GARDEN AREAS SHALL CONTAIN A PLANTING SOIL MIXTURE OF 40% SAND, 20-30% SANDY TOPSOIL, 0-5% CLAY, AND 30%-40% COMPOST. SOIL SHALL BE FREE FROM STONES OVER 2" DIAMETER, STUMPS, ROOTS OR OTHER DEBRIS. PLANTING SOIL SHALL CONFORM TO THE FOLLOWING: pH RANGE-5.5 TO 6.5; ORGANIC MATTER - 1.5% TO 3%; MAGNESIUM, SOLUABLE SALTS - LESS THAN 500 PPM. PROVIDE SOIL TEST RESULTS TO CONFIRM SOIL COMPLIANCE TO THE ABOVE CRITERIA.
3. COMPOST SHALL BE PROCESSED YARD WASTE. COMPOST SHALL NOT CONTAIN BIOSOLIDS.
4. PROVIDE A 3" DEEP LAYER OF COMPOSTED, SHREDDED HARDWOOD MULCH OVER SOIL SURFACE.
5. SAND SHALL CONFORM TO ASTM D 422, AND BE FREE OF DELETERIOUS MATERIAL.
6. TOPSOIL SHALL CONSIST OF TOPSOIL FROM ON SITE STOCKPILE, OR LOAM BORROW, WITH SOIL AMENDMENTS ADDED TO MEET THE ABOVE SPECIFICATION.
7. PLANTING SOIL SHALL BE PLACED IN LIFTS OF LESS THAN 12 INCHES AND LIGHTLY COMPACTED (MINIMUM COMPACTIVE EFFORT) BY TAMPING OR ROLLING WITH A HAND-OPERATED LANDSCAPE ROLLER. HEAVY EQUIPMENT SHALL BE RESTRICTED FROM TRAVELING OVER THE BIORETENTION AREA.
8. SEE GRADING AND DRAINAGE PLAN FOR DIMENSIONS, ELEVATIONS, PIPE MATERIALS AND SIZES, LOCATIONS AND INVERTS OF RAIN GARDEN DRAINAGE ELEMENTS.

Plant Maintenance Notes

1. CONTRACTOR SHALL PROVIDE COMPLETE MAINTENANCE OF THE LAWNS AND PLANTINGS. NO IRRIGATION IS PROPOSED FOR THIS SITE. THE CONTRACTOR SHALL SUPPLY SUPPLEMENTAL WATERING FOR NEW LAWNS AND PLANTINGS DURING THE ONE YEAR PLANT GUARANTEE PERIOD.
2. CONTRACTOR SHALL PROVIDE ALL MATERIALS, LABOR, AND EQUIPMENT FOR THE COMPLETE LANDSCAPE MAINTENANCE WORK. WATER SHALL BE PROVIDED BY THE CONTRACTOR.
3. WATERING SHALL BE REQUIRED DURING THE GROWING SEASON, WHEN NATURAL RAINFALL IS BELOW ONE INCH PER WEEK.
4. WATER SHALL BE APPLIED IN SUFFICIENT QUANTITY TO THOROUGHLY SATURATE THE SOIL IN THE ROOT ZONE OF EACH PLANT.
5. CONTRACTOR SHALL REPLACE DEAD OR DYING PLANTS AT THE END OF THE ONE YEAR GUARANTEE PERIOD. CONTRACTOR SHALL TURN OVER MAINTENANCE TO THE FACILITY MAINTENANCE STAFF AT THAT TIME.

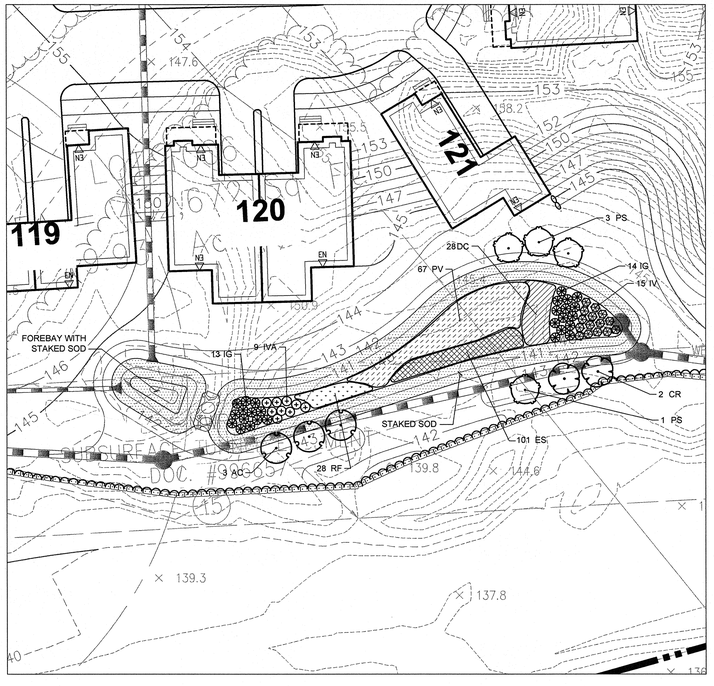

RG-E-1

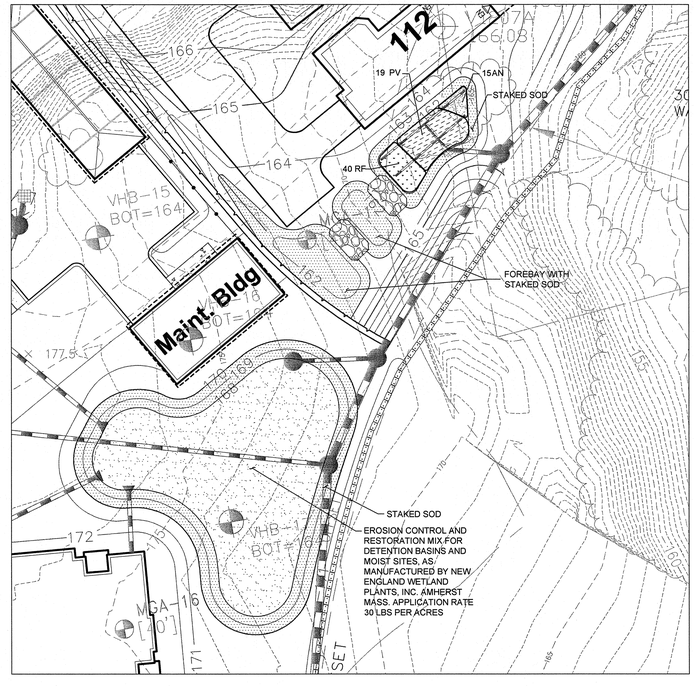

RG-E-2 &
Infiltration Basin DET-E-1

PLANT SCHEDULE

SMALL TREES	QTY	BOTANICAL NAME	COMMON NAME	SIZE
AI	1	Alnus incana	Thinleaf Alder	3 - 4' HT. MULTI
AC	21	Amelanchier canadensis	Shadblow Serviceberry	5 - 6' HT. MULTI
BP	9	Betula populifolia	Gray Birch	4 - 5' HT.
CR	6	Cornus racemosa	Gray Dogwood	5 - 6' HT.
PS	4	Prunus serotina	Wild Black Cherry	4 - 5' HT.

SHRUBS	QTY	BOTANICAL NAME	COMMON NAME	SIZE
CA	134	Clethra alnifolia	Summersweet Clethra	3 gal
CS	68	Cornus sericea	Red Twig Dogwood	5 gal
IG	131	Ilex glabra	Inkberry Holly	3 gal
IV	15	Ilex verticillata	Winterberry	3 gal 10% male plants
IVA	9	Itea virginica	Virginia Willow	3 gal

SHRUB AREAS	QTY	BOTANICAL NAME	COMMON NAME	SIZE
JV	63	Juniperus virginiana `Grey Owl`	Eastern Redcedar	3 gal@ 36" oc

GRASSES	QTY	BOTANICAL NAME	COMMON NAME	SIZE
CLR	0	Chasmanthium latifolium `River Mist`	Variegated Northern Sea Oats	1 gal@ 36" oc
DC	796	Deschampsia cespitosa	Tufted Hair Grass	1 gal@ 30" oc
ES	101	Eragrostis spectabilis	Purple Love Grass	1 gal@ 18" oc
PV	635	Panicum virgatum	Switch Grass	1 gal@ 36" oc
SS	220	Schizachyrium scoparium	Little Bluestem Grass	4"/quart@ 18" oc

PERENNIALS	QTY	BOTANICAL NAME	COMMON NAME	SIZE
AN	440	Aster novae-angliae	New England Aster	1 gal@ 24" oc
IVF	320	Iris versicolor	Blue Flag	1 gal@ 36" oc
RF	275	Rudbeckia fulgida	Coneflower	1 gal@ 24" oc
SSP	283	Solidago rugosa	Goldenrod	1 gal@ 36" oc

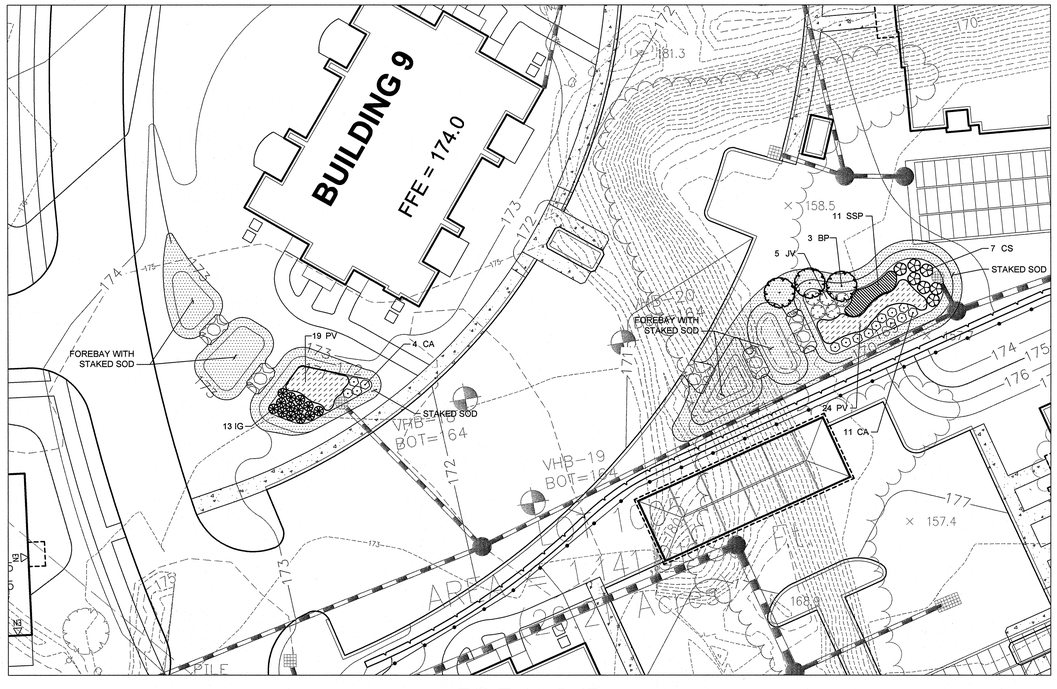

RG-E-4A & 4B

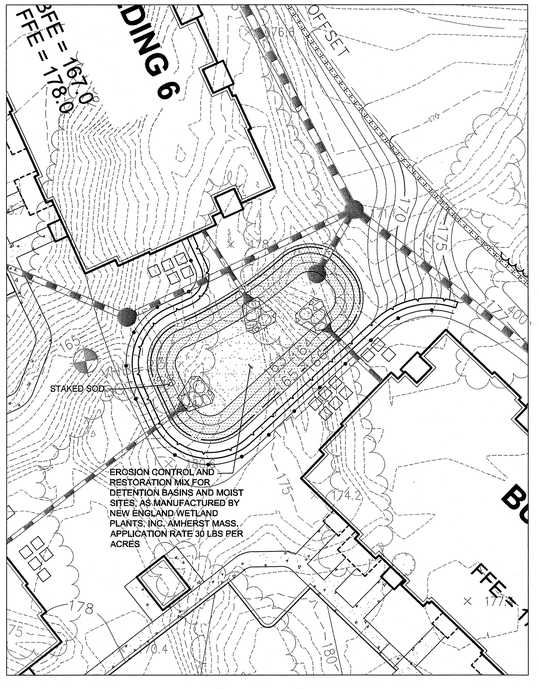

Infiltration Basin
DET-E-2 SEE SHEET C-7.4 FOR BIOFILTRATION SWALE AND RAIN GARDEN DETAILS.

N

20 0 20 40
SCALE IN FEET

VHB
Vanasse Hangen Brustlin, Inc.
Transportation
Land Development
Environmental Services
Union Station, Suite 219
2 Washington Square
Worcester, Massachusetts 01604
508.752.1001 • FAX 508.752.1276

PLAN INTENT:
THIS PLAN DEPICTS THE PROJECT AT A LEVEL OF DETAIL SUFFICIENT TO MEET THE REQUIREMENTS OF PERMITTING BUT IS NOT INTENDED TO INCLUDE DETAILS SUFFICIENT FOR CONSTRUCTION.

FRAMINGHAM PLANNING BOARD
DEFINITIVE DEVELOPMENT PLAN APPROVALS

THIS ENDORSEMENT OF THE PLANNING BOARD SHOULD NOT BE CONSTRUED TO BE DETERMINATION OF CONFORMANCE WITH ZONING REGULATIONS.

No.	Revision	Date	Appvd.
2	SPECIAL PERMIT REVISIONS	5/14/13	CCL
1	RESPONSE TO COMMENTS	4/16/13	CCL

Designed by NNR | Drawn by WHH | Checked by CCL
CAD checked by WHH | Approved by CCL
Scale 1"=20' | Date November 12, 2012

Project Title
Danforth Green

Framingham, Massachusetts

Issued for
Permitting

NOT FOR CONSTRUCTION

Drawing Title
Rain Garden
Planting Plan

MASSACHUSETTS James E. Fiasconaro No. 814 REGISTERED LANDSCAPE ARCHITECT
5-14-13

Drawing Number
RG-1
Sheet 24 of 27
Project Number 12004.00

\\VHB\PROJ\WORCESTER\12004.00\CAD\LD\PLANSET\12004.00-RG-PLANTING

Saved Tuesday, May 14, 2013 1:14:14 PM BGESNER Plotted Tuesday, May 14, 2013 1:17:49 PM Gesner, Brittany

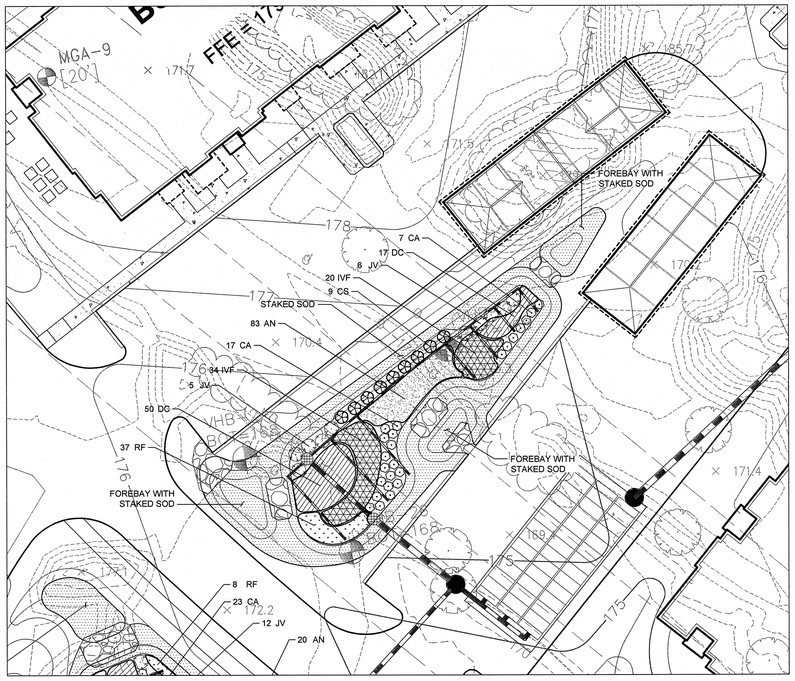

RG-E-7

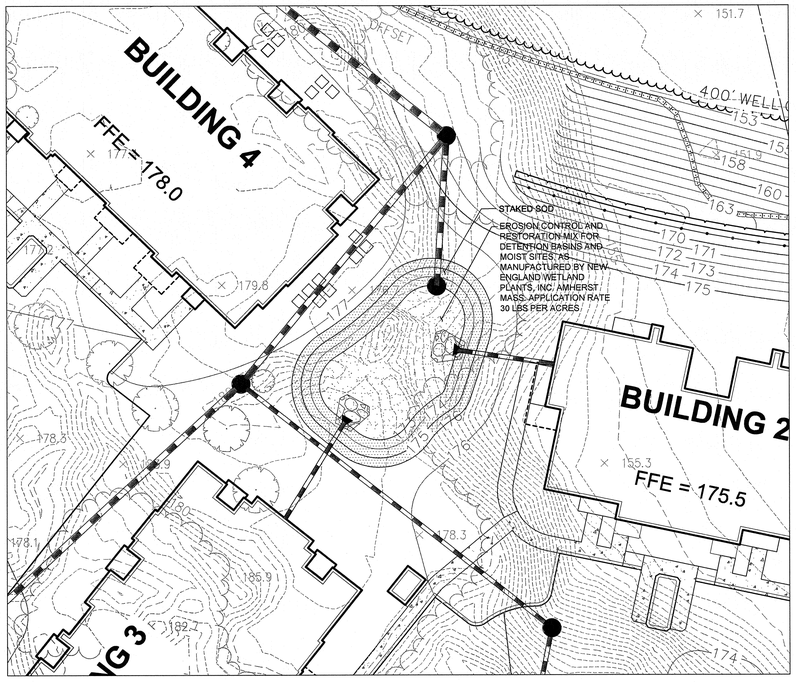

Infiltration Basin
DET-E-3

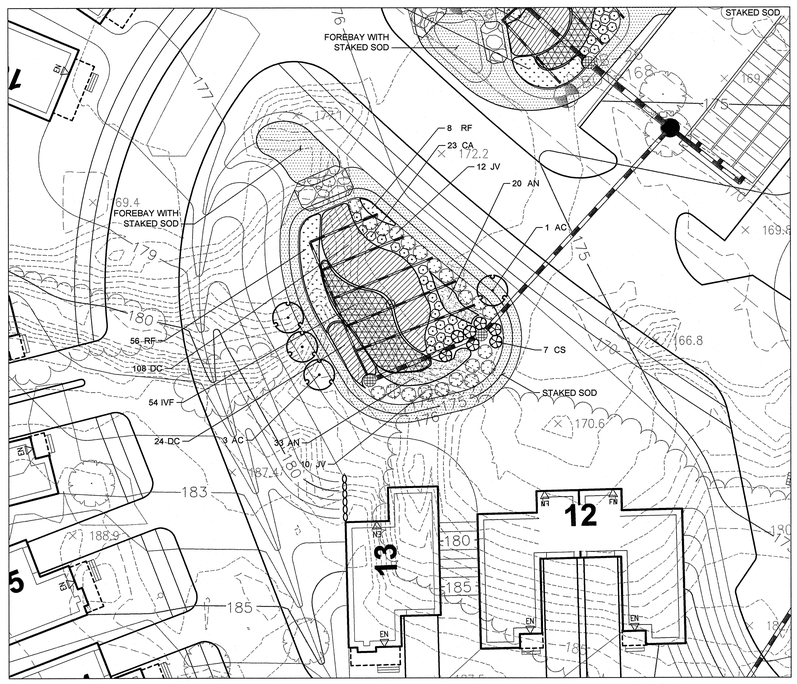

RG-E-8

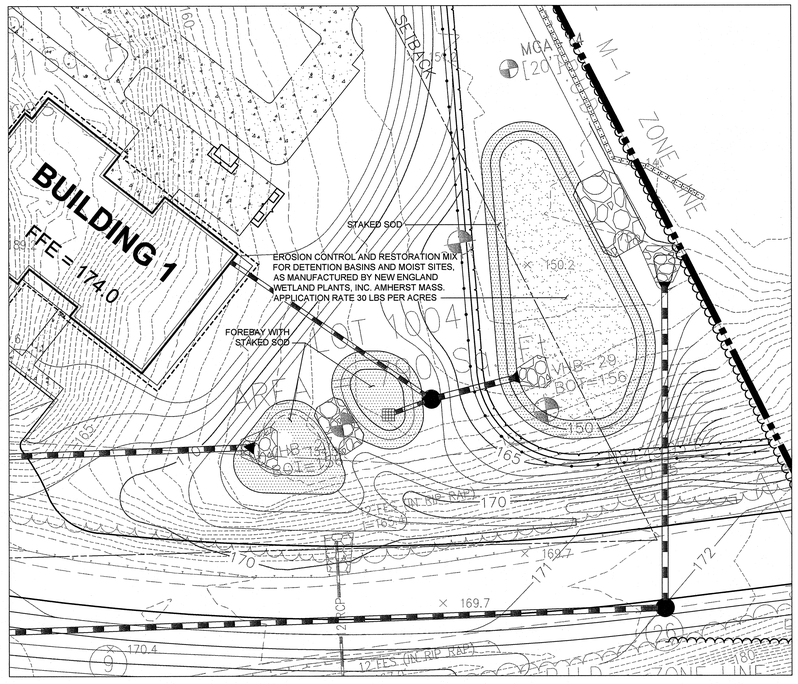

Infiltration Basin
E-9

N

20 0 20 40
SCALE IN FEET

SEE SHEET RG-1 FOR PLANT SCHEDULE AND NOTES.

SEE SHEET C-7.4 FOR BIOFILTRATION SWALE AND RAIN GARDEN DETAILS.

Vanasse Hangen Brustlin, Inc.

Transportation
Land Development
Environmental Services

Union Station, Suite 219
2 Washington Square
Worcester, Massachusetts 01604
508.752.1001 • FAX 508.752.1276

PLAN INTENT:
THIS PLAN DEPICTS THE PROJECT AT A LEVEL OF DETAIL SUFFICIENT TO MEET THE REQUIREMENTS OF PERMITTING BUT IS NOT INTENDED TO INCLUDE DETAILS SUFFICIENT FOR CONSTRUCTION.

FRAMINGHAM PLANNING BOARD
DEFINITIVE DEVELOPMENT PLAN APPROVALS

THIS ENDORSEMENT OF THE PLANNING BOARD SHOULD NOT BE CONSTRUED TO BE DETERMINATION OF CONFORMANCE WITH ZONING REGULATIONS.

No.	Revision	Date	App'd
2	SPECIAL PERMIT REVISIONS	5/14/13	CCL
1	RESPONSE TO COMMENTS	4/16/13	CCL

Designed by NNR | Drawn by WHH | Checked by CCL
CAD checked by WHH | Approved by CCL
Scale 1"=20' | Date November 12, 2012

Project Title
Danforth Green

Framingham, Massachusetts

Issued for
Permitting

NOT FOR CONSTRUCTION

Drawing Title

Rain Garden
Planting Plan

Drawing Number
RG-2

Sheet 25 of 27

Project Number
12004.00

5-14-13

Saved Tuesday, May 14, 2013 1:14:14 PM BGESNER Plotted Tuesday, May 14, 2013 1:18:09 PM Gesner, Brittany

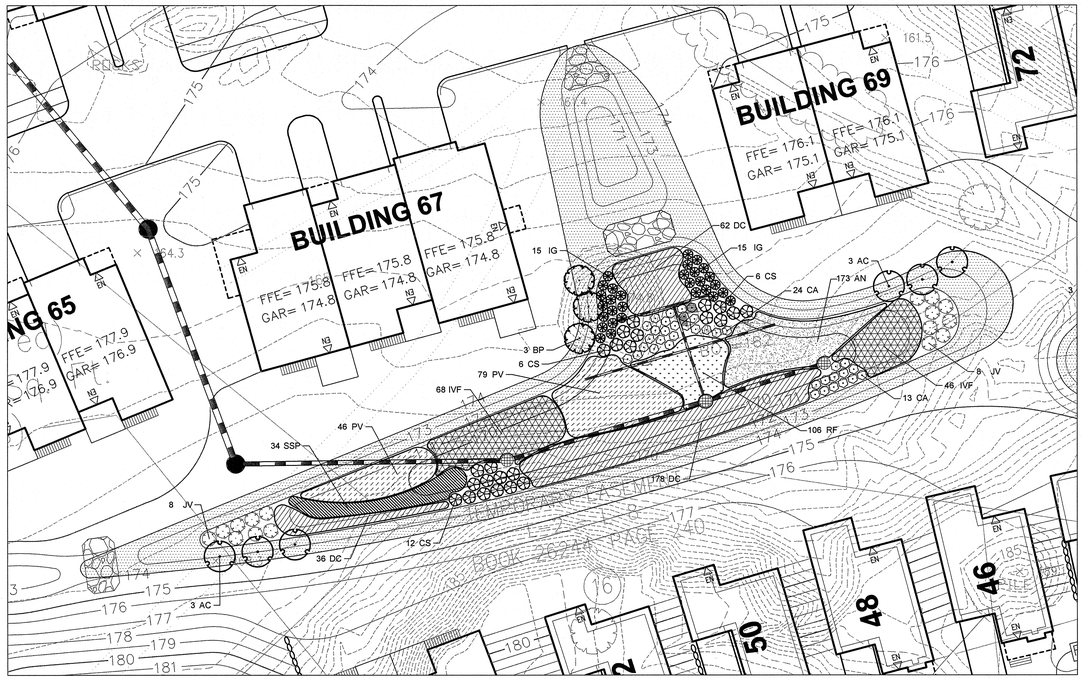

RG-W-2

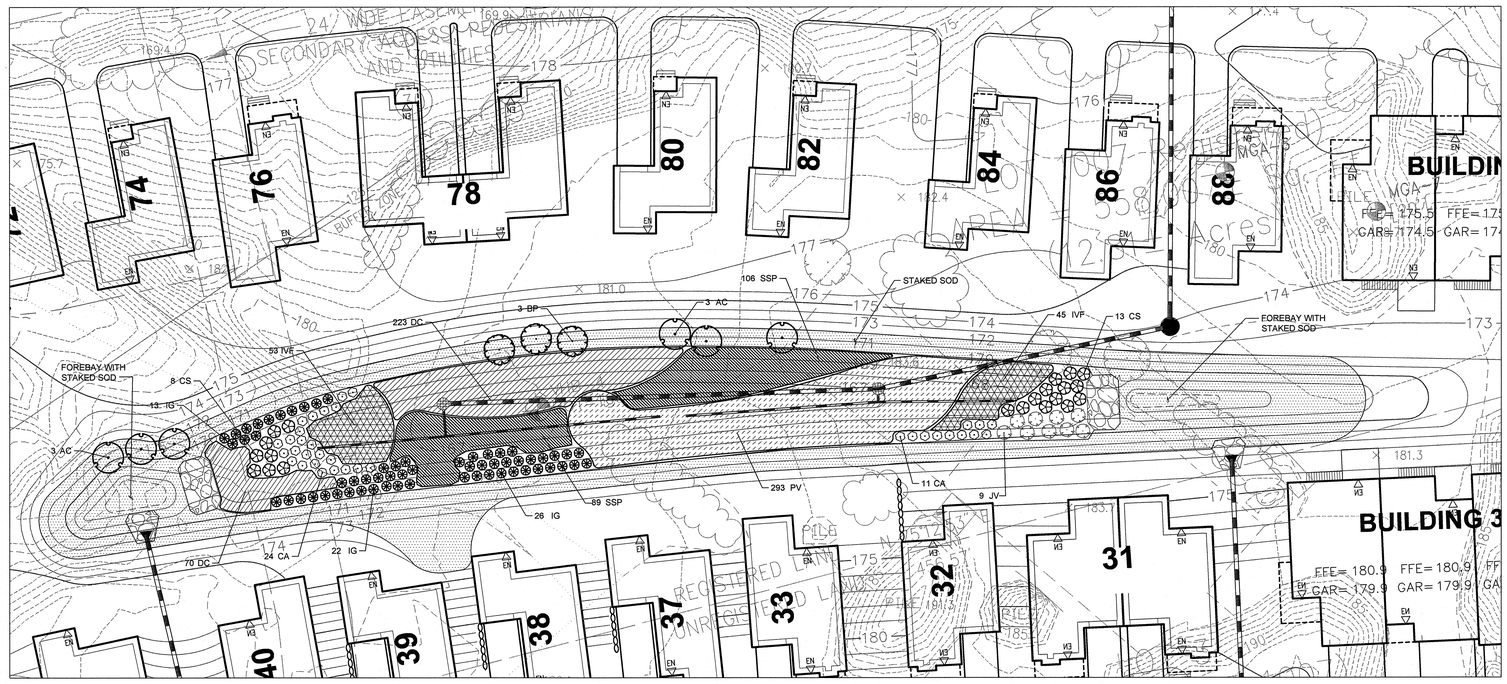

RG-W-3

N

20 0 20 40

SCALE IN FEET

SEE SHEET RG-1 FOR PLANT SCHEDULE AND NOTES.

SEE SHEET C-7.4 FOR BIOFILTRATION SWALE AND RAIN GARDEN DETAILS.

VHB

Vanasse Hangen Brustlin, Inc.

Transportation
Land Development
Environmental Services

Union Station, Suite 219
2 Washington Square
Worcester, Massachusetts 01604
508.752.1001 • FAX 508.752.1276

PLAN INTENT:
THIS PLAN DEPICTS THE PROJECT AT A LEVEL OF DETAIL SUFFICIENT TO MEET THE REQUIREMENTS OF PERMITTING BUT IS NOT INTENDED TO INCLUDE DETAILS SUFFICIENT FOR CONSTRUCTION.

FRAMINGHAM PLANNING BOARD
DEFINITIVE DEVELOPMENT PLAN APPROVALS

THIS ENDORSEMENT OF THE PLANNING BOARD SHOULD NOT BE CONSTRUED TO BE DETERMINATION OF CONFORMANCE WITH ZONING REGULATIONS.

No.	Revision	Date	Apprvd.
2	SPECIAL PERMIT REVISIONS	5/14/13	CCL
1	RESPONSE TO COMMENTS	4/16/13	CCL

Designed by NNR | Drawn by WHH | Checked by CCL
CAD checked by WHH | Approved by CCL
Scale 1"=20' | Date November 12, 2012

Project Title
Danforth Green

Framingham, Massachusetts

Issued for
Permitting

NOT FOR CONSTRUCTION

Drawing Title
Rain Garden
Planting Plan

MASSACHUSETTS
James E. Fasser
No. 814
REGISTERED LANDSCAPE ARCHITECT
5.14.13

Drawing Number
RG-3

Sheet 26 of 27

Project Number
12004.00

12004.00-RG-PLANTING.DWG

Saved Tuesday, May 14, 2013 1:14:14 PM BKESNER Plotted Tuesday, May 14, 2013 1:18:52 PM Gesner, Brittany

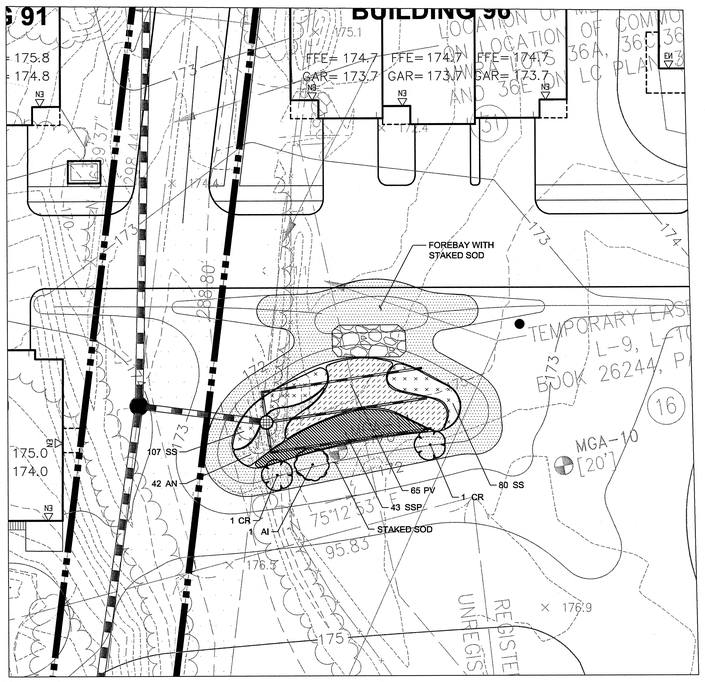

RG-W-4

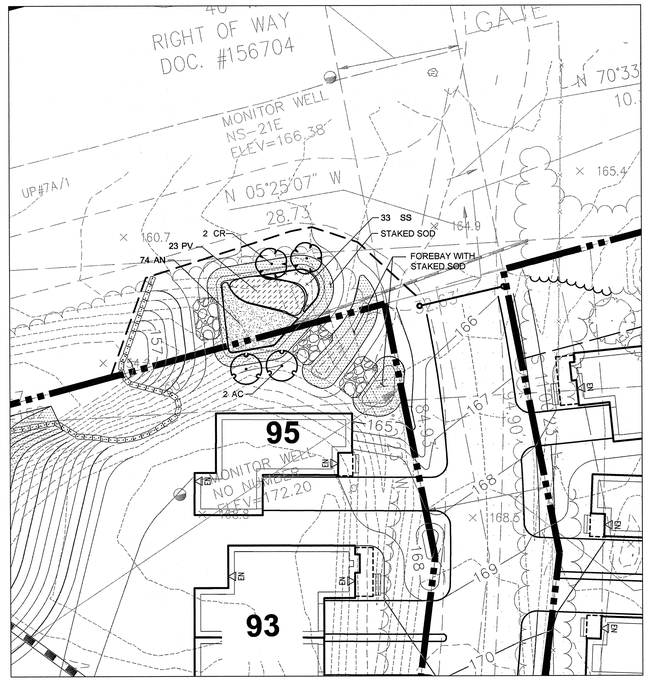

RG-W-5

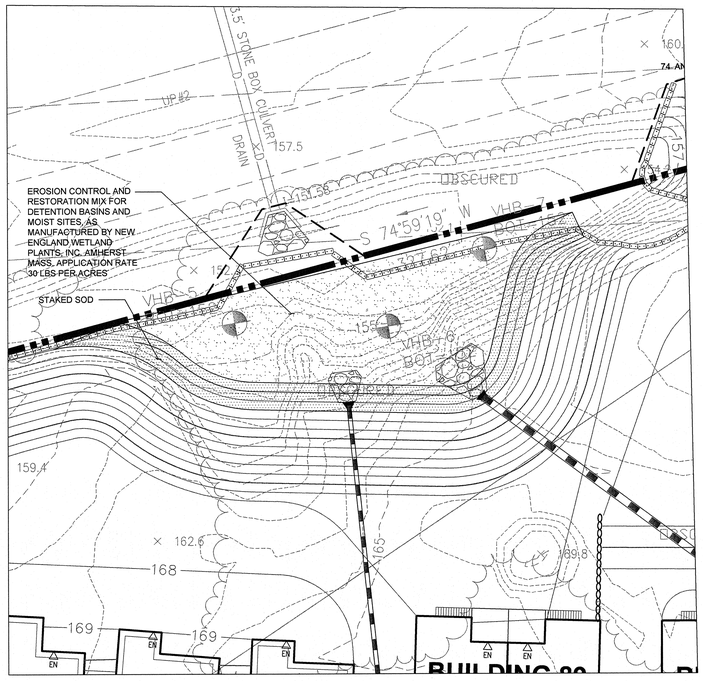

Detention Basin
CULV-N

N

20 0 20 40
SCALE IN FEET

SEE SHEET RG-1 FOR PLANT SCHEDULE AND NOTES.

SEE SHEET C-7.4 FOR BIOFILTRATION SWALE AND RAIN GARDEN DETAILS.

VHB
Vanasse Hangen Brustlin, Inc.
Transportation
Land Development
Environmental Services
Union Station, Suite 219
2 Washington Square
Worcester, Massachusetts 01604
508.752.1001 • FAX 508.752.1276

PLAN INTENT:
THIS PLAN DEPICTS THE PROJECT AT A LEVEL OF DETAIL SUFFICIENT TO MEET THE REQUIREMENTS OF PERMITTING BUT IS NOT INTENDED TO INCLUDE DETAILS SUFFICIENT FOR CONSTRUCTION.

FRAMINGHAM PLANNING BOARD
DEFINITIVE DEVELOPMENT PLAN APPROVALS

THIS ENDORSEMENT OF THE PLANNING BOARD SHOULD NOT BE CONSTRUED TO BE DETERMINATION OF CONFORMANCE WITH ZONING REGULATIONS.

No.	Revision	Date	Appvd.
2	SPECIAL PERMIT REVISIONS	5/14/13	CCL
1	RESPONSE TO COMMENTS	4/16/13	CCL

Designed by RGL | Drawn by MO | Checked by CCL
CAD checked by RGL | Approved by CCL
Scale 1"=20' | Date November 12, 2012

Project Title
Danforth Green

Framingham, Massachusetts
Issued for
Permitting

NOT FOR CONSTRUCTION

Drawing Title
Rain Garden
Planting Plan

MASSACHUSETTS James E. Fuller No. 814 REGISTERED LANDSCAPE ARCHITECT
5.14.13

Drawing Number
RG-4
Sheet 27 of 27
Project Number
12004.00

VHB
Vanasse Hangen Brustlin, Inc.

Transportation
Land Development
Environmental Services

101 Walnut Street, P.O. Box 9151
Watertown, Massachusetts 02471-9151
617 924 1770 • FAX 617 924 2286

N

MASS GRID
NAD 83

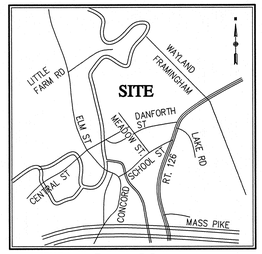

Locus Map
(NOT TO SCALE)

Area

PARCEL	SQUARE FEET	ACRES
LOT 7B	22,500	0.52
LOT 1004	790	0.02
LOT 1005	1,141,911	26.21
LOT 1006	432,672	9.93
LOT 1007	558,007±	12.81±
LOT 1	48,274	1.11
LOT 3	474,837±	10.90±
TOTAL	2,678,991±	61.50±

References

MIDDLESEX SOUTH COUNTY REGISTRY OF DEEDS

DEEDS:
BOOK 1044, PAGE 83 CERT. #182833
BOOK 1044, PAGE 84 CERT. #182384
L. C. DOCUMENT #156704
L. C. DOCUMENT #162868
L. C. DOCUMENT #164539
L. C. DOCUMENT #996657
L. C. DOCUMENT #1000317

PLANS:
L.C. PLAN 3857V
L.C. PLAN 3857L
L.C. PLAN 3857-7
L.C. PLAN 3857-106
L.C. PLAN 16547G

General Notes

1) THE PROPERTY LINES SHOWN ON THIS PLAN WERE TAKEN FROM AN ACTUAL FIELD SURVEY BY METROWEST ENGINEERING INC. AND VHB AND FROM PLANS AND DEEDS OF RECORD.
2) THE EXISTING CONDITIONS SHOWN ON THIS PLAN WERE DEVELOPED FROM AERIAL PHOTOGRAMMETRIC MAPPING BY EASTERN TOPOGRAPHICS, INC., BASED ON AERIAL PHOTOGRAPHS TAKEN IN JUNE, 2012.
3) THE LOCATIONS OF EXISTING UNDERGROUND UTILITIES SHOWN ON THIS PLAN ARE BASED ON FIELD OBSERVATIONS AND INFORMATION OF RECORD. THEY ARE NOT WARRANTED TO BE EXACTLY LOCATED NOR IS IT WARRANTED THAT ALL UNDERGROUND UTILITIES OR OTHER STRUCTURES ARE SHOWN ON THIS PLAN.
4) HORIZONTAL DATUM IS BASED ON MASS. GRID SYSTEM, NAD 1983. ELEVATIONS SHOWN ON THIS PLAN REFER TO NAVD OF 1988.
5) WETLANDS SHOWN ON THIS PLAN WERE DELINEATED AND SURVEYED BY VHB.
6) THE PARCELS LIES IN FLOOD HAZARD ZONES AE (AREA OF 100 YEAR FLOOD), ZONE X (AREA BETWEEN 100 YEAR AND 500 YEAR FLOOD) AND ZONE X (AREA OUTSIDE OF THE 500 YEAR FLOOD), AS SHOWN ON THE FLOOD INSURANCE RATE MAP FOR MIDDLESEX COUNTY, MASSACHUSETTS, MAP NUMBER 25017C0509E, EFFECTIVE DATE JUNE 4, 2010.
7) THE PARCEL LIES WITHIN A MANUFACTURING (M) ZONING DISTRICT, SINGLE RESIDENCE (R-1) ZONING DISTRICT AS WELL AS A PLANNED DEVELOPMENT (PUD) AS SHOWN ON THE TOWN OF FRAMINGHAM, MASSACHUSETTS ZONING MAP, REVISED MAY 23, 2000. DIMENSIONAL REQUIREMENTS FOR A PLANNED UNIT DEVELOPMENT (PUD) GENERAL MANUFACTURING (M) AND SINGLE RESIDENCE R-1 ZONING DISTRICT AT THE TIME OF THIS SURVEY ARE:

PLANNED UNIT DEVELOPMENT (P.U.D.)

MINIMUM LOT AREA	50 ACRES
MINIMUM FRONTAGE	VARIABLE
MINIMUM FRONT YARD SETBACK	30 FEET
MINIMUM SIDE YARD SETBACK	VARIABLE
MINIMUM REAR YARD SETBACK	VARIABLE
MAXIMUM BUILDING HEIGHT	40 FEET
MINIMUM DISTANCE BETWEEN STRUCTURES	30 FEET
MINIMUM DISTANCE FROM P.U.D. BOUNDARY	50 FEET
MAXIMUM FLOOR AREA RATIO	32%
MAXIMUM LOT COVERAGE	40%

GENERAL MANUFACTURING (M)

NON-RESIDENTIAL USE

MINIMUM LOT AREA	6,000 S.F.
MINIMUM FRONTAGE	50 FEET
MINIMUM FRONT YARD SETBACK	50 FEET
MINIMUM SIDE YARD SETBACK	15 FEET
MINIMUM REAR YARD SETBACK	15 FEET
MAXIMUM BUILDING HEIGHT	80 FEET
MAXIMUM FLOOR AREA RATIO	32%

SINGLE RESIDENCE (R-1)

MINIMUM LOT AREA	8,000 FEET
MINIMUM FRONTAGE	65 FEET
MINIMUM FRONT YARD SETBACK	30 FEET
MINIMUM SIDE YARD SETBACK	10 FEET
MINIMUM REAR YARD SETBACK	10 FEET
MAXIMUM BUILDING HEIGHT	35 FEET
MAXIMUM FLOOR AREA RATIO	N/A
MAXIMUM LOT COVERAGE	35%

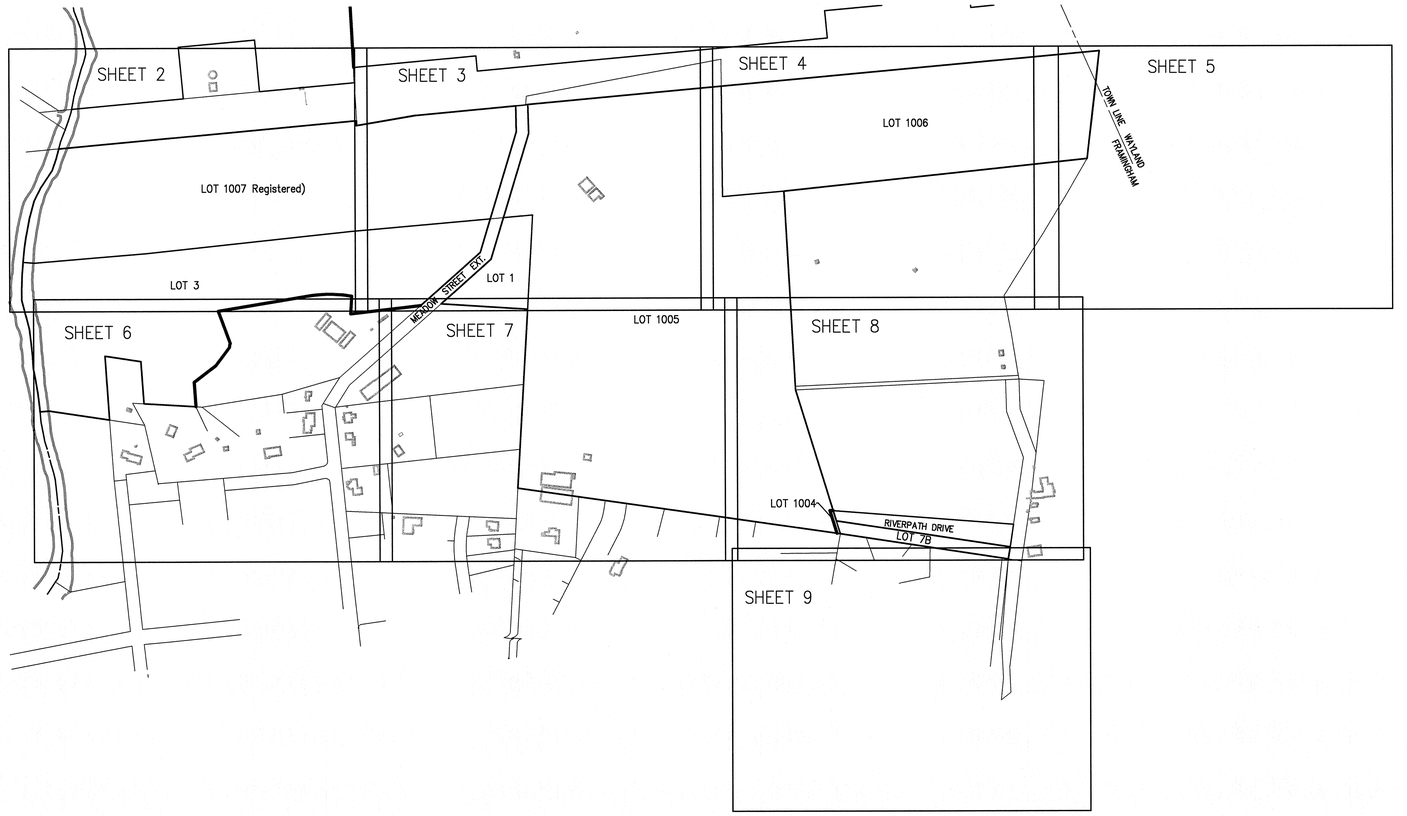

200 0 200 400
SCALE IN FEET

Legend

- DRAIN MANHOLE
- CATCH BASIN
- SEWER MANHOLE
- ELECTRIC MANHOLE
- TELEPHONE MANHOLE
- MANHOLE
- HH HAND HOLE
- WATER GATE
- FIRE HYDRANT
- GAS GATE
- BOLLARD w/LIGHT
- STREET SIGN
- LIGHT POLE
- UTILITY POLE
- GUY POLE
- GUY WIRE
- MONITORING WELL
- FLOOD LIGHT
- WELL
- TREE
- MARSH
- F.F.E.=45.27' FINISHED FLOOR ELEVATION
- CNO COULD NOT OPEN
- NPV NO PIPES VISIBLE
- DYL DOUBLE YELLOW LINE
- DWL DASHED WHITE LINE
- SYL SINGLE WHITE LINE
- EOP EDGE OF PAVEMENT
- CC CONCRETE CURB
- VGC VERTICAL GRANITE CURB
- SGE SLOPED GRANITE EDGE
- BB BITUMINOUS BERM
- BC BITUMINOUS CURB
- GUARD RAIL
- CHAIN LINK FENCE
- DRAINAGE LINE
- SEWER LINE
- OHW OVERHEAD WIRE
- E UNDERGROUND ELECTRIC
- T TELEPHONE LINE
- G GAS LINE
- W WATER LINE
- STONE WALL
- TREE LINE
- 100BZ 100-FT BUFFER ZONE
- 100RA 100-FT RIVER FRONT AREA
- 200RA 200-FT RIVER FRONT AREA
- APF1-100' LIMIT MEAN ANNUAL HIGH WATER
- BF1-100 LIMIT OF BANK
- AF1-100 VEGETATED WETLAND BOUNDARY

No.	Revision	Date	Appvd.

Designed by	Drawn by	Checked by
CAD checked by		Approved by
Scale 1"=200'		Date November 8, 2012

Project Title

Danforth Green, LLC

Framingham, Massachusetts
Issued for

Drawing Title

Existing Conditions Plan of Land

Drawing Number
Sv-1
Sheet 1 of 9

Project Number
12004.00

COMMONWEALTH OF MASSACHUSETTS
RUSSELL J. BOUSQUET
NO. 36309
REGISTERED PROFESSIONAL ENGINEER
11/14/12

\\vhb\proj\Worcester\12004.00\~From Other Offices\Watertown, MA\project
2012-07-03\12004.00\cad\sr\planset\12004.00-AERIAL.dwg

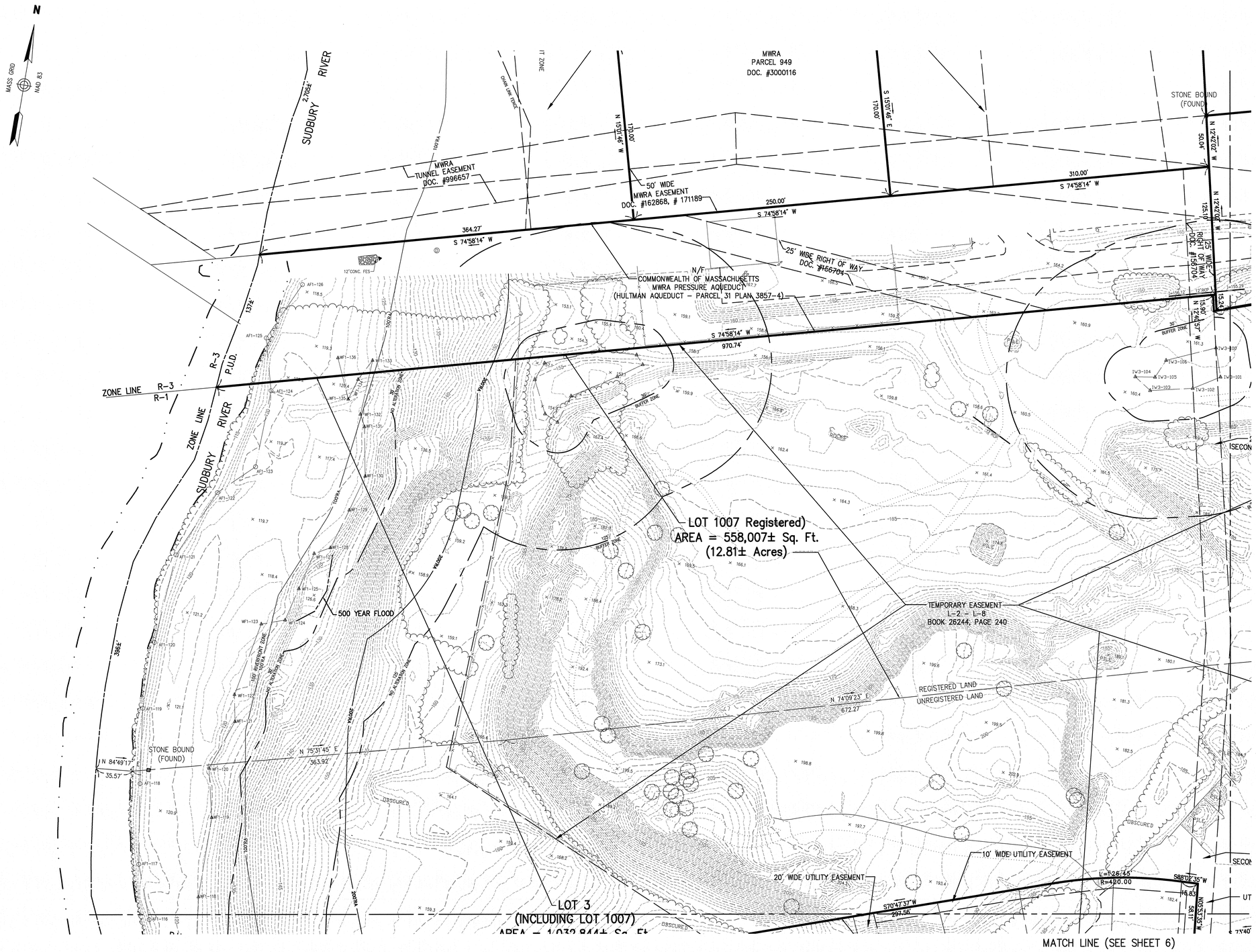

40 0 40 80
SCALE IN FEET

Legend

- DRAIN MANHOLE
- CATCH BASIN
- SEWER MANHOLE
- ELECTRIC MANHOLE
- TELEPHONE MANHOLE
- MANHOLE
- HAND HOLE
- WATER GATE
- FIRE HYDRANT
- GAS GATE
- BOLLARD w/LIGHT
- STREET SIGN
- LIGHT POLE
- UTILITY POLE
- GUY POLE
- GUY WIRE
- MONITORING WELL
- FLOOD LIGHT
- WELL
- TREE
- MARSH
- F.F.E.=45.27' FINISHED FLOOR ELEVATION
- CNO COULD NOT OPEN
- NPV NO PIPES VISIBLE
- DYL DOUBLE YELLOW LINE
- DWL DASHED WHITE LINE
- SYL SINGLE WHITE LINE
- EOP EDGE OF PAVEMENT
- CC CONCRETE CURB
- VGC VERTICAL GRANITE CURB
- SGE SLOPED GRANITE EDGE
- BB BITUMINOUS BERM
- BC BITUMINOUS CURB
- GUARD RAIL
- CHAIN LINK FENCE
- DRAINAGE LINE
- SEWER LINE
- OHW OVERHEAD WIRE
- E UNDERGROUND ELECTRIC
- T TELEPHONE LINE
- G GAS LINE
- W WATER LINE
- STONE WALL
- TREE LINE
- 100'BZ 100-FT BUFFER ZONE
- 100'RA 100-FT RIVER FRONT AREA
- 200'RA 200-FT RIVER FRONT AREA
- AF1-100' LIMIT MEAN ANNUAL HIGH WATER
- BF1-100' LIMIT OF BANK
- WF1-100' VEGETATED WETLAND BOUNDARY

No.	Revision	Date	Appvd.

Designed by | Drawn by | Checked by
CAD checked by | Approved by
Scale 1"=40' | Date November 8, 2012

Project Title

Danforth Green, LLC

Framingham, Massachusetts

Issued for

Drawing Title

Existing Conditions
Plan of Land

Drawing Number
Sv-2
Sheet 2 of 9

Project Number
12004.00

\\vhb\proj\Worcester\12004.00\~From Other Offices\Watertown, MA\project 2012-07-03\12004.00\cad\ar\planset\12004.00-AERIAL.dwg

VHB
Vanasse Hangen Brustlin, Inc.
Transportation
Land Development
Environmental Services
101 Walnut Street, P.O. Box 9151
Watertown, Massachusetts 02471-9151
617 924 1770 • FAX 617 924 2286

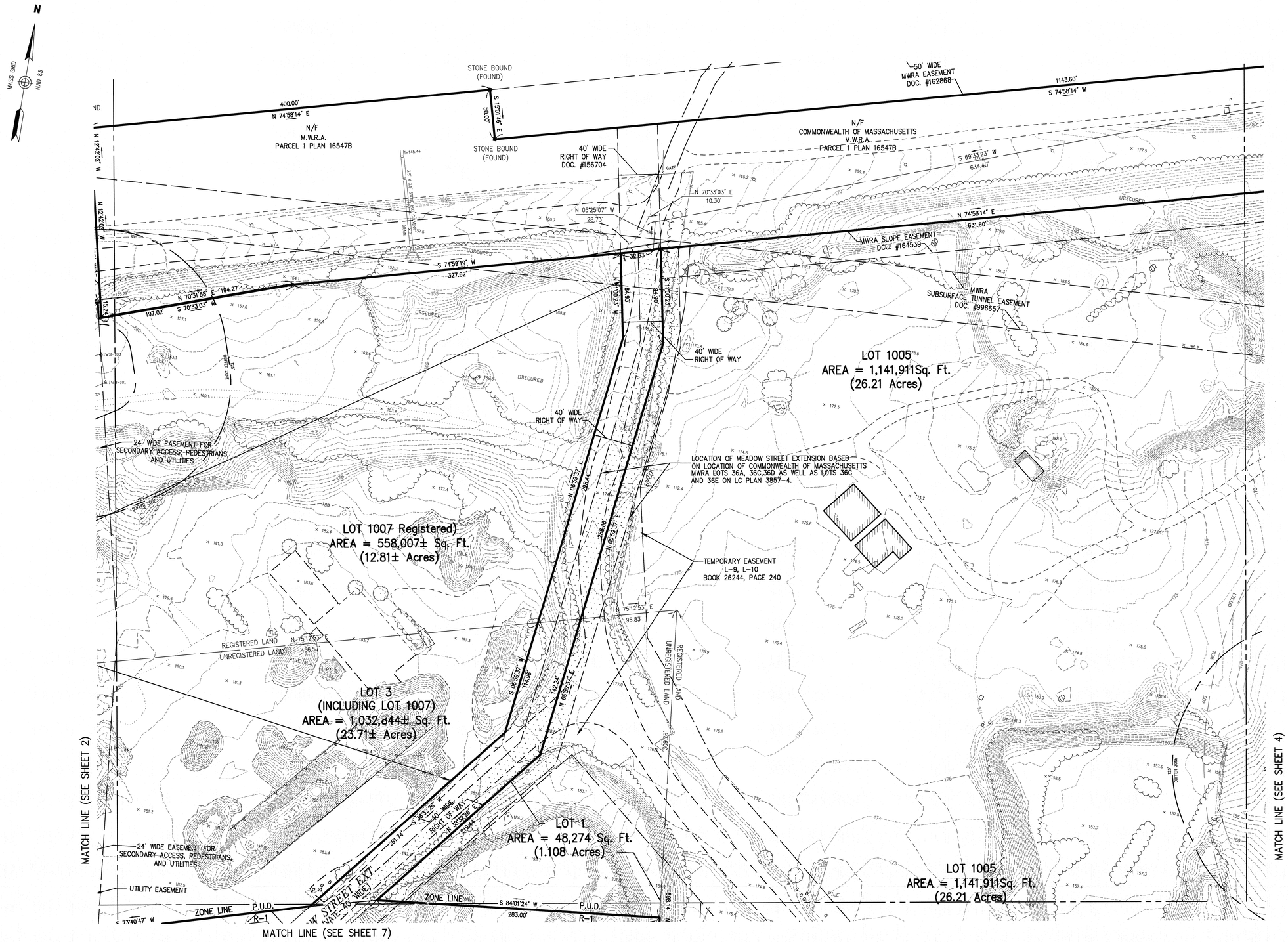

Legend

- DRAIN MANHOLE
- CATCH BASIN
- SEWER MANHOLE
- ELECTRIC MANHOLE
- TELEPHONE MANHOLE
- MANHOLE
- HAND HOLE
- WATER GATE
- FIRE HYDRANT
- GAS GATE
- BOLLARD w/LIGHT
- STREET SIGN
- LIGHT POLE
- UTILITY POLE
- GUY POLE
- GUY WIRE
- MONITORING WELL
- FLOOD LIGHT
- WELL
- TREE
- MARSH
- F.F.E.=45.27' FINISHED FLOOR ELEVATION
- CNO COULD NOT OPEN
- NPV NO PIPES VISIBLE
- DYL DOUBLE YELLOW LINE
- DWL DASHED WHITE LINE
- SYL SINGLE WHITE LINE
- EOP EDGE OF PAVEMENT
- CC CONCRETE CURB
- VGC VERTICAL GRANITE CURB
- SGE SLOPED GRANITE EDGE
- BB BITUMINOUS BERM
- BC BITUMINOUS CURB
- GUARD RAIL
- CHAIN LINK FENCE
- DRAINAGE LINE
- SEWER LINE
- OHW OVERHEAD WIRE
- E UNDERGROUND ELECTRIC
- T TELEPHONE LINE
- G GAS LINE
- W WATER LINE
- STONE WALL
- TREE LINE
- 100'BZ 100-FT BUFFER ZONE
- 100'RA 100-FT RIVER FRONT AREA
- 200'RA 200-FT RIVER FRONT AREA
- LMW-100 LIMIT MEAN ANNUAL HIGH WATER
- LOB-100 LIMIT OF BANK
- WF1-100 VEGETATED WETLAND BOUNDARY

No.	Revision	Date	Appvd.

Designed by	Drawn by	Checked by
CAD checked by		Approved by
Scale 1"=40'	Date November 8, 2012	

Project Title

Danforth Green, LLC

Framingham, Massachusetts

Issued for

Drawing Title

Existing Conditions
Plan of Land

Drawing Number

Sv-3

Sheet 3 of 9

Project Number
12004.00

\\vhb\proj\Worcester\12004.00\~From Other Offices\Watertown, MA\project
2012-07-03\12004.00\cad\sr\planset\12004.00-AERIAL.dwg

VHB
Vanasse Hangen Brustlin, Inc.

Transportation
Land Development
Environmental Services

101 Walnut Street, P.O. Box 9151
Watertown, Massachusetts 02471-9151
617 924 1770 • FAX 617 924 2286

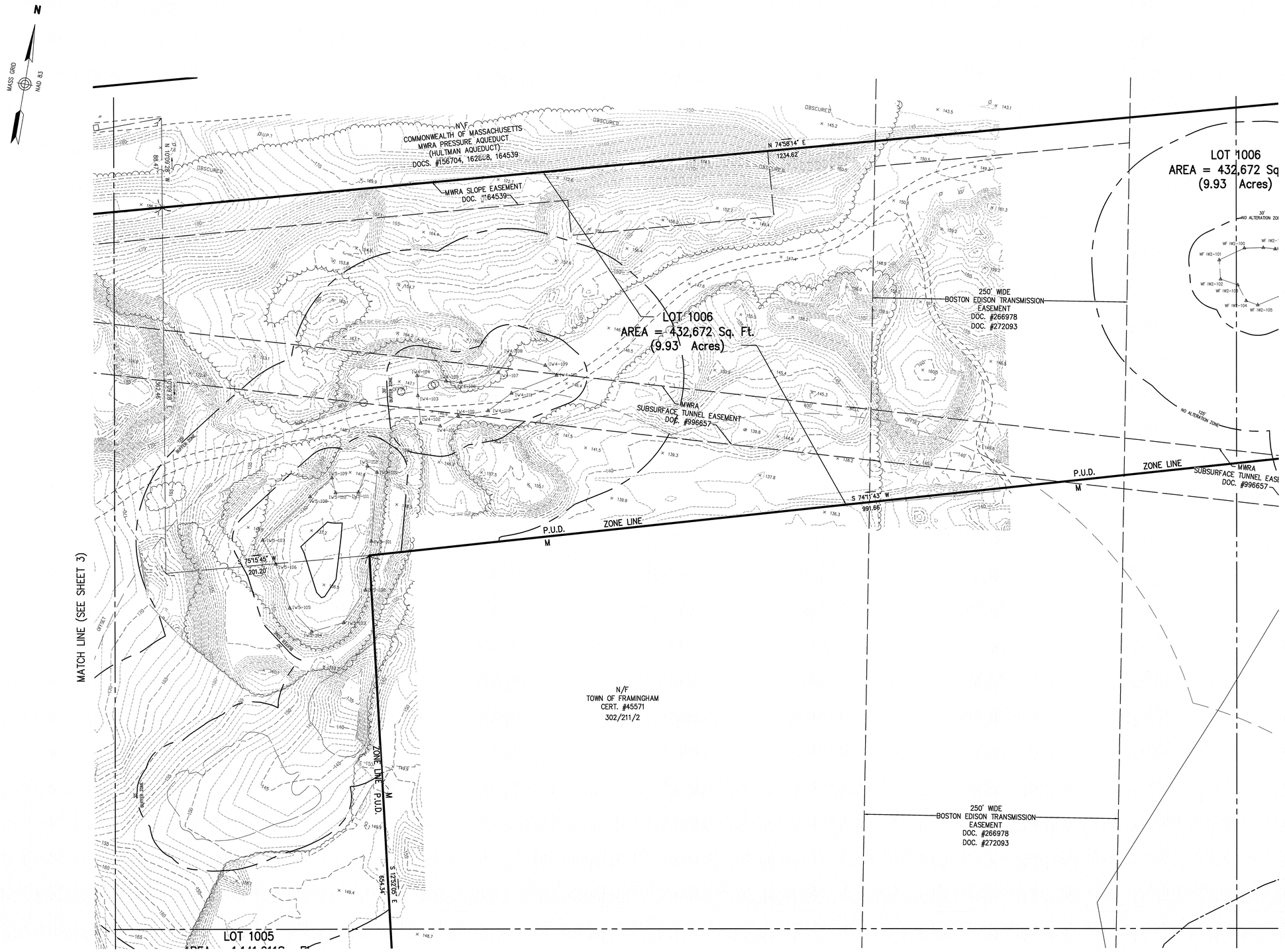

40 0 40 80
SCALE IN FEET

Legend

- DRAIN MANHOLE
- CATCH BASIN
- SEWER MANHOLE
- ELECTRIC MANHOLE
- TELEPHONE MANHOLE
- MANHOLE
- HH HAND HOLE
- WATER GATE
- FIRE HYDRANT
- GAS GATE
- BOLLARD w/LIGHT
- STREET SIGN
- LIGHT POLE
- UTILITY POLE
- GUY POLE
- GUY WIRE
- MONITORING WELL
- FLOOD LIGHT
- W WELL
- TREE
- MARSH
- F.F.E.=45.27' FINISHED FLOOR ELEVATION
- CNO COULD NOT OPEN
- NPV NO PIPES VISIBLE
- DYL DOUBLE YELLOW LINE
- DWL DASHED WHITE LINE
- SYL SINGLE WHITE LINE
- EOP EDGE OF PAVEMENT
- CC CONCRETE CURB
- VGC VERTICAL GRANITE CURB
- SGE SLOPED GRANITE EDGE
- BB BITUMINOUS BERM
- BC BITUMINOUS CURB
- GUARD RAIL
- CHAIN LINK FENCE
- DRAINAGE LINE
- SEWER LINE
- OHW OVERHEAD WIRE
- UNDERGROUND ELECTRIC
- T TELEPHONE LINE
- G GAS LINE
- W WATER LINE
- STONE WALL
- TREE LINE
- 100'BZ 100-FT BUFFER ZONE
- 100'RA 100-FT RIVER FRONT AREA
- 200'RA 200-FT RIVER FRONT AREA
- BF1-100 LIMIT MEAN ANNUAL HIGH WATER
- BF1-100 LIMIT OF BANK
- WF1-100 VEGETATED WETLAND BOUNDARY

No.	Revision	Date	Appvd.

Designed by | Drawn by | Checked by
CAD checked by | Approved by
Scale 1"=40' | Date November 8, 2012

Project Title

Danforth Green, LLC

Framingham, Massachusetts

Issued for

Drawing Title

Existing Conditions
Plan of Land

RUSSELL J. ROUSQUET NO. 35369 REGISTERED PROFESSIONAL LAND SURVEYOR COMMONWEALTH OF MASSACHUSETTS

10/12/12

Drawing Number Sv-4

Sheet 4 of 9

Project Number 12004.00

\\vhb\proj\Worcester\12004.00\~From Other Offices\Watertown, MA\project
2012-07-03\12004.00\cad\sr\planset\12004.00-AERIAL.dwg

VHB
Vanasse Hangen Brustlin, Inc.
Transportation
Land Development
Environmental Services
101 Walnut Street, P.O. Box 9151
Watertown, Massachusetts 02471-9151
617 924 1770 • FAX 617 924 2286

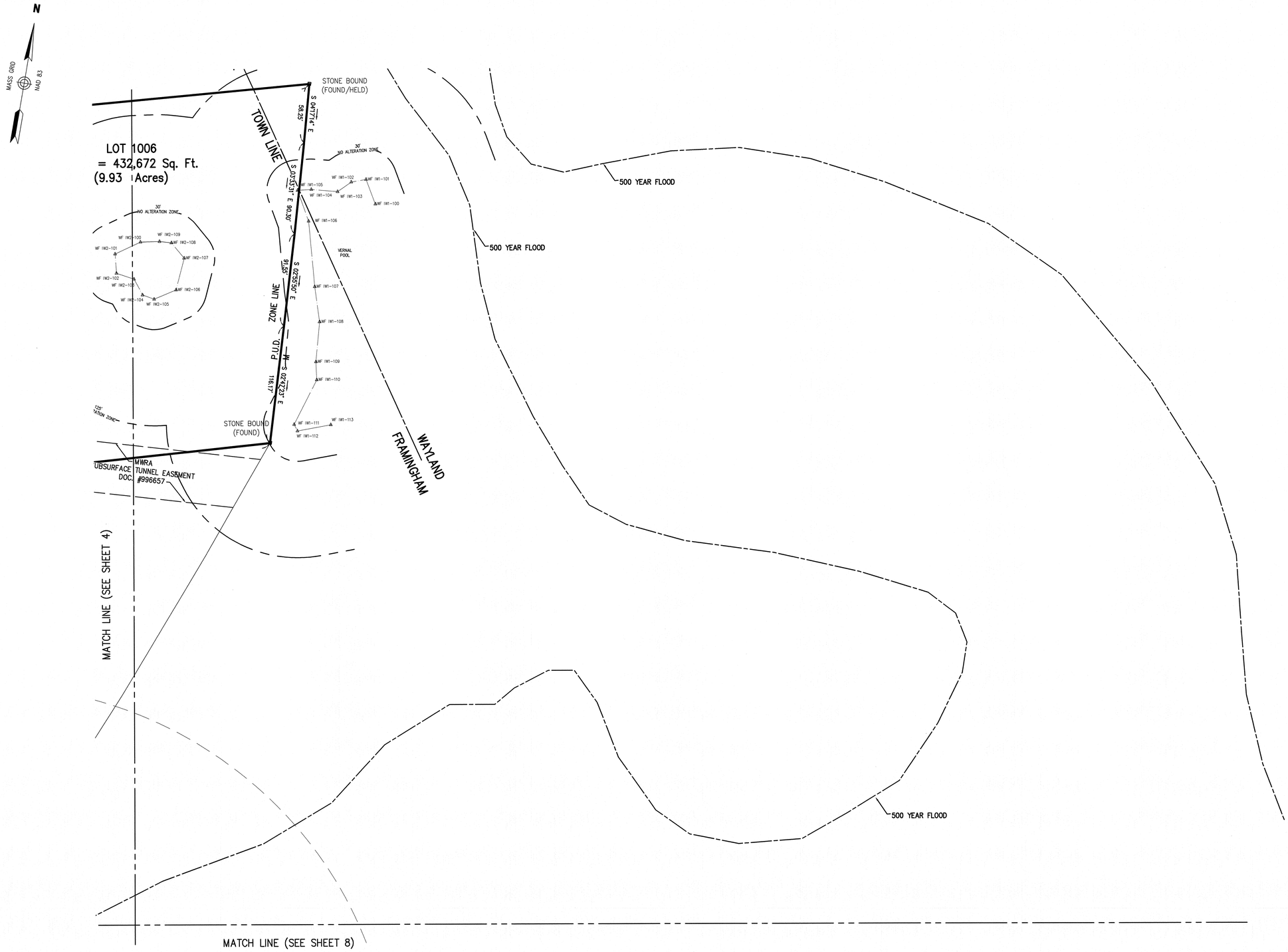

VHB
Vanasse Hangen Brustlin, Inc.

Transportation
Land Development
Environmental Services

101 Walnut Street, P.O. Box 9151
Watertown, Massachusetts 02471-9151
617 924 1770 • FAX 617 924 2286

Legend

- DRAIN MANHOLE
- CATCH BASIN
- SEWER MANHOLE
- ELECTRIC MANHOLE
- TELEPHONE MANHOLE
- MANHOLE
- HH HAND HOLE
- WATER GATE
- FIRE HYDRANT
- GAS GATE
- BOLLARD w/LIGHT
- STREET SIGN
- LIGHT POLE
- UTILITY POLE
- GUY POLE
- GUY WIRE
- MONITORING WELL
- FLOOD LIGHT
- W WELL
- TREE
- MARSH
- F.F.E.=45.27' FINISHED FLOOR ELEVATION
- CNO COULD NOT OPEN
- NPV NO PIPES VISIBLE
- DYL DOUBLE YELLOW LINE
- DWL DASHED WHITE LINE
- SYL SINGLE WHITE LINE
- EOP / EC EDGE OF PAVEMENT
- CC CONCRETE CURB
- VGC VERTICAL GRANITE CURB
- SGE SLOPED GRANITE EDGE
- BB BITUMINOUS BERM
- BC BITUMINOUS CURB
- GUARD RAIL
- CHAIN LINE FENCE
- DRAINAGE LINE
- SEWER LINE
- OHW OVERHEAD WIRE
- E UNDERGROUND ELECTRIC
- T TELEPHONE LINE
- G GAS LINE
- W WATER LINE
- STONE WALL
- TREE LINE
- 100'BZ 100-FT BUFFER ZONE
- 100'RA 100-FT RIVER FRONT AREA
- 200'RA 200-FT RIVER FRONT AREA
- ELEV.=100' LIMIT MEAN ANNUAL HIGH WATER
- BF=100' LIMIT OF BANK
- WF1-100 VEGETATED WETLAND BOUNDARY

No.	Revision	Date	Appvd.

Designed by	Drawn by	Checked by
CAD checked by	Approved by	
Scale 1"=40'	Date November 8, 2012	

Project Title

Danforth Green, LLC

Framingham, Massachusetts

Issued for

Drawing Title

Existing Conditions
Plan of Land

RUSSELL J. BOUSQUET NO. 35389 REGISTERED PROFESSIONAL LAND SURVEYOR COMMONWEALTH OF MASSACHUSETTS

11/9/12

Drawing Number
Sv-5

Sheet 5 of 9

Project Number
12004.00

\\vhb\proj\Worcester\12004.00\~Form Other Offices\Watertown, MA\proj.scf
2012-07-03\12004.00\cad\sr\planset\12004.00-AERIAL.dwg

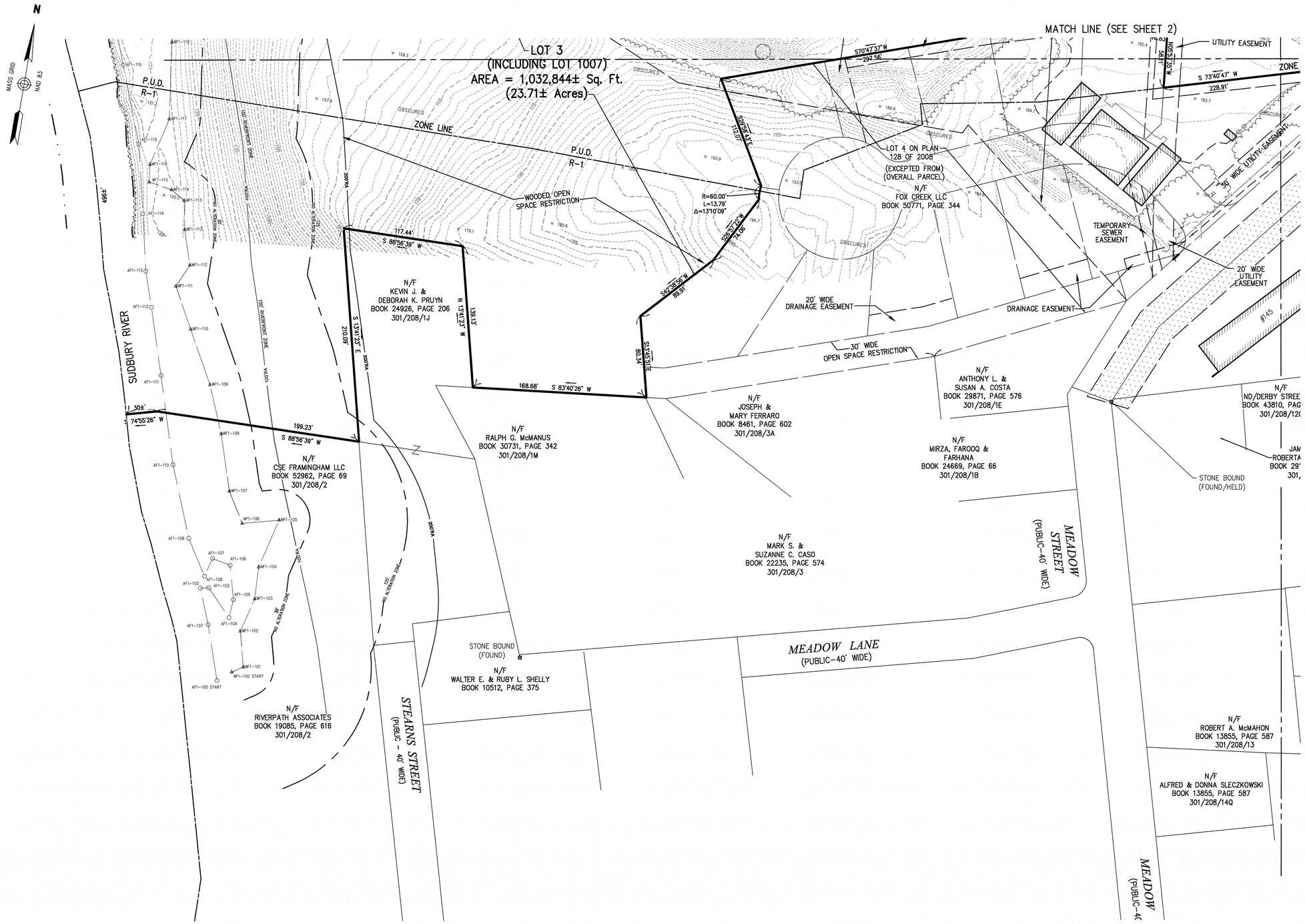

40 0 40 80
SCALE IN FEET

Legend

- DRAIN MANHOLE
- CATCH BASIN
- SEWER MANHOLE
- ELECTRIC MANHOLE
- TELEPHONE MANHOLE
- MANHOLE
- HH HAND HOLE
- WATER GATE
- FIRE HYDRANT
- GAS GATE
- BOLLARD w/LIGHT
- STREET SIGN
- LIGHT POLE
- UTILITY POLE
- GUY POLE
- GUY WIRE
- MONITORING WELL
- FLOOD LIGHT
- WELL
- TREE
- MARSH
- F.F.E.=45.27' FINISHED FLOOR ELEVATION
- CNO COULD NOT OPEN
- NPV NO PIPES VISIBLE
- DYL DOUBLE YELLOW LINE
- DWL DASHED WHITE LINE
- SYL SINGLE WHITE LINE
- EOP EDGE OF PAVEMENT
- CC CONCRETE CURB
- VGC VERTICAL GRANITE CURB
- SGE SLOPED GRANITE EDGE
- BB BITUMINOUS BERM
- BC BITUMINOUS CURB
- GUARD RAIL
- CHAIN LINK FENCE
- DRAINAGE LINE
- SEWER LINE
- OHW OVERHEAD WIRE
- E UNDERGROUND ELECTRIC
- T TELEPHONE LINE
- G GAS LINE
- W WATER LINE
- STONE WALL
- TREE LINE
- 100'BZ 100-FT BUFFER ZONE
- 100'RA 100-FT RIVER FRONT AREA
- 200'RA 200-FT RIVER FRONT AREA
- LIMIT MEAN ANNUAL HIGH WATER
- LIMIT OF BANK
- WF1-100 VEGETATED WETLAND BOUNDARY

VHB
Vanasse Hangen Brustlin, Inc.
Transportation
Land Development
Environmental Services
101 Walnut Street, P.O. Box 9151
Watertown, Massachusetts 02471-9151
617 924 1770 • FAX 617 924 2286

No.	Revision	Date	Appvd.

Designed by | Drawn by | Checked by
CAD checked by | Approved by
Scale 1"=40' | Date November 8, 2012

Project Title
Danforth Green, LLC

Framingham, Massachusetts
Issued for

Drawing Title
Existing Conditions
Plan of Land

Drawing Number
Sv-6
Sheet 6 of 9
Project Number
12004.00

RUSSELL J. ROUSQUET NO. 35389 REGISTERED PROFESSIONAL LAND SURVEYOR COMMONWEALTH OF MASSACHUSETTS
11/12/12

\\vhb\proj\Worcester\12004.00\~From Other Offices\Watertown, MA\proj.scl
2012-07-03\12004.00\cad\sr\planset\12004.00-AERIAL.dwg

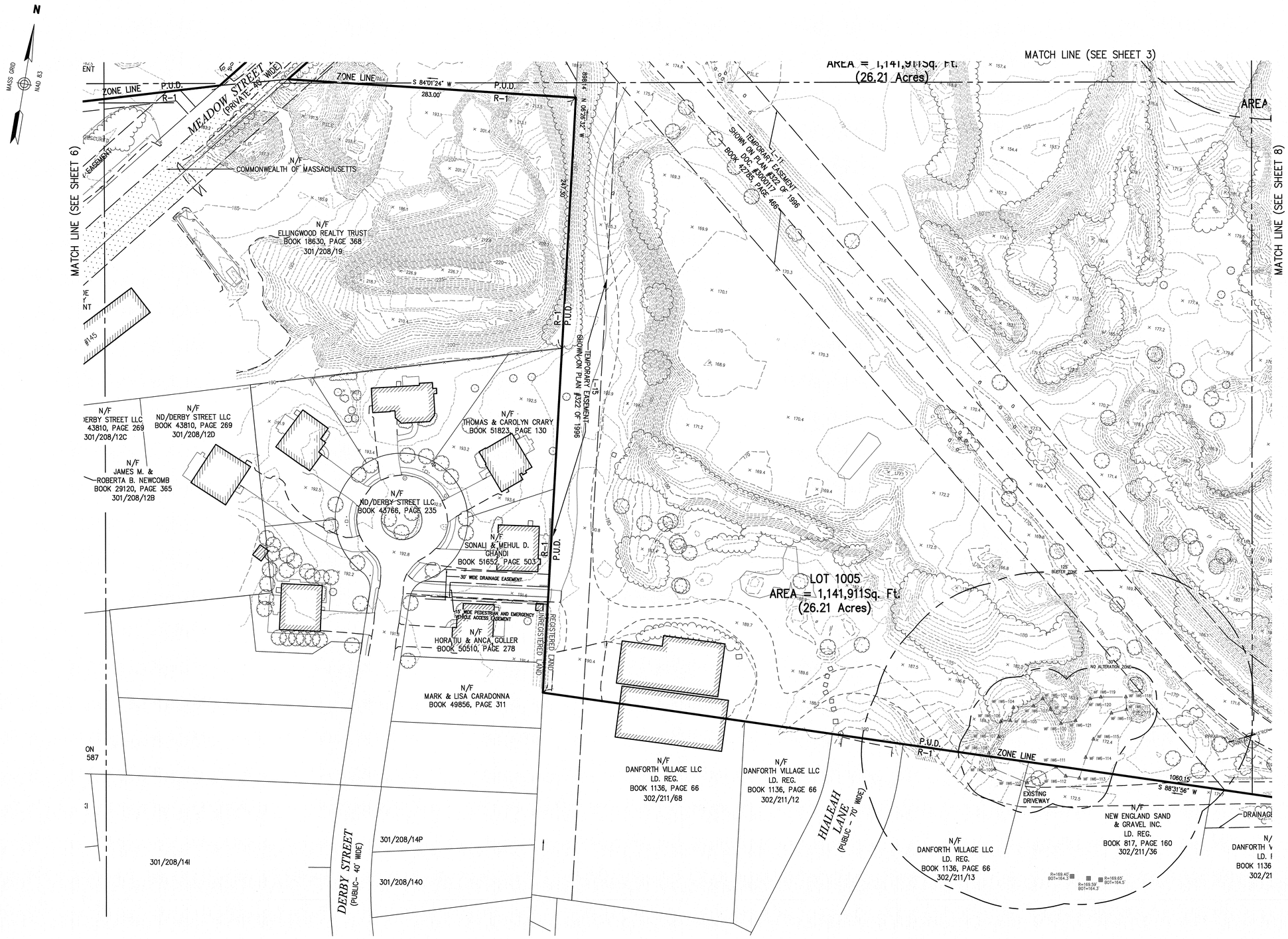

Legend

- DRAIN MANHOLE
- CATCH BASIN
- SEWER MANHOLE
- ELECTRIC MANHOLE
- TELEPHONE MANHOLE
- MANHOLE
- HAND HOLE
- WATER GATE
- FIRE HYDRANT
- GAS GATE
- BOLLARD w/LIGHT
- STREET SIGN
- LIGHT POLE
- UTILITY POLE
- GUY POLE
- GUY WIRE
- MONITORING WELL
- FLOOD LIGHT
- WELL
- TREE
- MARSH
- F.F.E.=45.27' FINISHED FLOOR ELEVATION
- CNO COULD NOT OPEN
- NPV NO PIPES VISIBLE
- DYL DOUBLE YELLOW LINE
- DWL DASHED WHITE LINE
- SYL SINGLE WHITE LINE
- EOP EDGE OF PAVEMENT
- CC CONCRETE CURB
- VGC VERTICAL GRANITE CURB
- SGE SLOPED GRANITE EDGE
- BB BITUMINOUS BERM
- BC BITUMINOUS CURB
- GUARD RAIL
- CHAIN LINK FENCE
- DRAINAGE LINE
- SEWER LINE
- OHW OVERHEAD WIRE
- E UNDERGROUND ELECTRIC
- T TELEPHONE LINE
- G GAS LINE
- W WATER LINE
- STONE WALL
- TREE LINE
- 100'BZ 100-FT BUFFER ZONE
- 100'RA 100-FT RIVER FRONT AREA
- 200'RA 200-FT RIVER FRONT AREA
- APT=150' LIMIT MEAN ANNUAL HIGH WATER
- BT=100 LIMIT OF BANK
- WF1=100 VEGETATED WETLAND BOUNDARY

No.	Revision	Date	Appvd.

Designed by	Drawn by	Checked by
CAD checked by	Approved by	
Scale 1"=40'	Date November 8, 2012	

Project Title

Danforth Green, LLC

Framingham, Massachusetts

Issued for

Drawing Title

Existing Conditions
Plan of Land

COMMONWEALTH OF MASSACHUSETTS
RUSSELL J. BOUSQUET
NO. 39389
REGISTERED LAND SURVEYOR

11/12/12

Drawing Number
Sv-7

Sheet 7 of 9

Project Number
12004.00

\\vhb\proj\Worcester\12004.00\~From Other Offices\Watertown, MA\project
2012-07-03\12004.00\cad\sr\planset\12004.00-AERIAL.dwg

VHB
Vanasse Hangen Brustlin, Inc.
Transportation
Land Development
Environmental Services
101 Walnut Street, P.O. Box 9151
Watertown, Massachusetts 02471-9151
617 924 1770 • FAX 617 924 2286

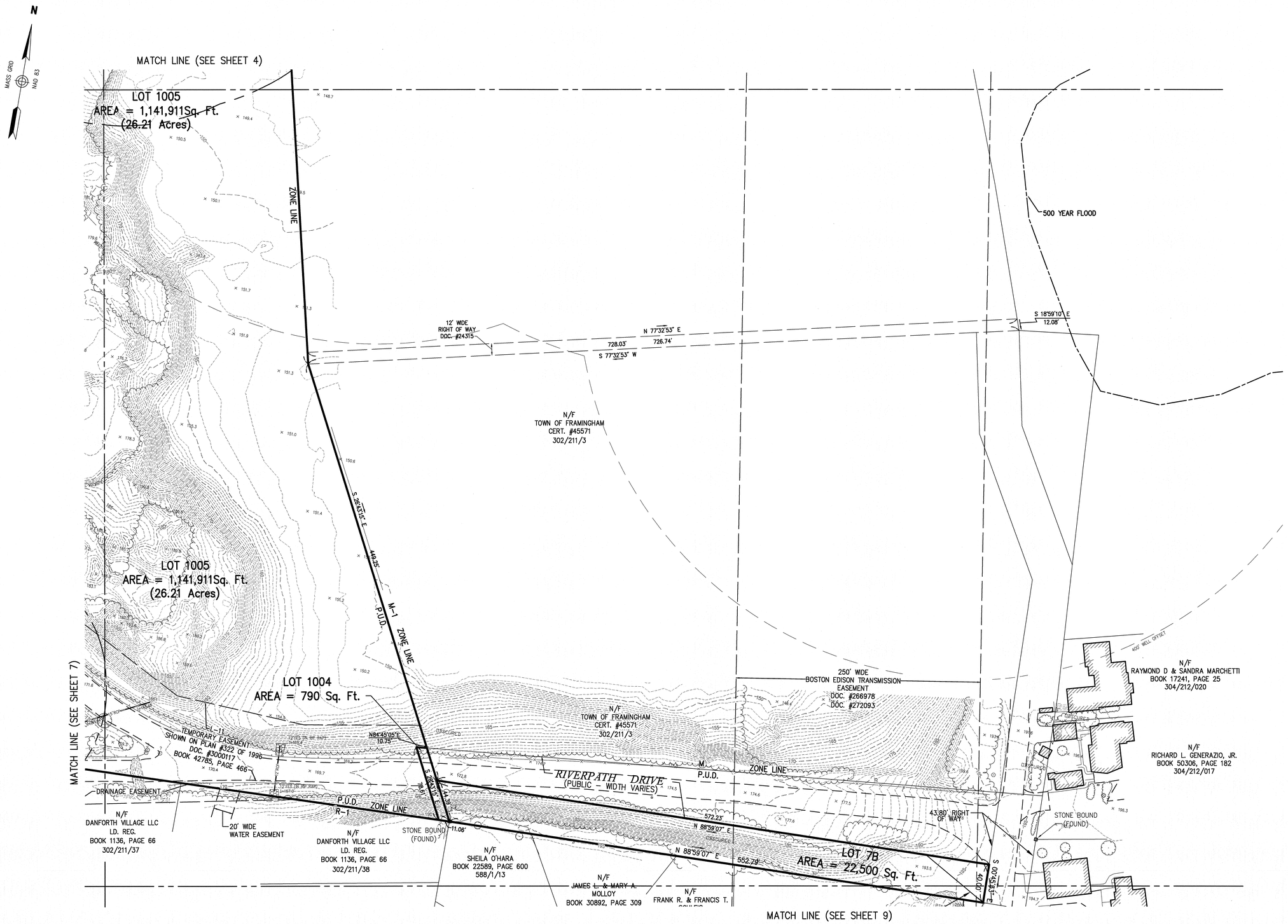

VHB
Vanasse Hangen Brustlin, Inc.
Transportation
Land Development
Environmental Services
101 Walnut Street, P.O. Box 9151
Watertown, Massachusetts 02471-9151
617 924 1770 • FAX 617 924 2286

Legend

- DRAIN MANHOLE
- CATCH BASIN
- SEWER MANHOLE
- ELECTRIC MANHOLE
- TELEPHONE MANHOLE
- MANHOLE
- HAND HOLE
- WATER GATE
- FIRE HYDRANT
- GAS GATE
- BOLLARD w/LIGHT
- STREET SIGN
- LIGHT POLE
- UTILITY POLE
- GUY POLE
- GUY WIRE
- MONITORING WELL
- FLOOD LIGHT
- WELL
- TREE
- MARSH
- F.F.E.=45.27' FINISHED FLOOR ELEVATION
- CNO COULD NOT OPEN
- NPV NO PIPES VISIBLE
- DYL DOUBLE YELLOW LINE
- DWL DASHED WHITE LINE
- SYL SINGLE WHITE LINE
- EOP EDGE OF PAVEMENT
- CC CONCRETE CURB
- VGC VERTICAL GRANITE CURB
- SGE SLOPED GRANITE EDGE
- BB BITUMINOUS BERM
- BC BITUMINOUS CURB
- GUARD RAIL
- CHAIN LINK FENCE
- DRAINAGE LINE
- SEWER LINE
- OHW OVERHEAD WIRE
- E UNDERGROUND ELECTRIC
- T TELEPHONE LINE
- G GAS LINE
- W WATER LINE
- STONE WALL
- TREE LINE
- 100'BZ 100-FT BUFFER ZONE
- 100'RA 100-FT RIVER FRONT AREA
- 200'RA 200-FT RIVER FRONT AREA
- AF1-100 LIMIT MEAN ANNUAL HIGH WATER
- BF1-100 LIMIT OF BANK
- WF1-100 VEGETATED WETLAND BOUNDARY

No.	Revision	Date	Appvd.

Designed by	Drawn by	Checked by
CAD checked by	Approved by	
Scale 1"=40'	Date November 8, 2012	

Project Title
Danforth Green, LLC

Framingham, Massachusetts
Issued for

Drawing Title
Existing Conditions
Plan of Land

COMMONWEALTH OF MASSACHUSETTS
RUSSELL J. BOUSQUET
NO. 35399
REGISTERED PROFESSIONAL LAND SURVEYOR

Russell J. Bousquet 11/12/12

Drawing Number
Sv-8
Sheet 8 of 9
Project Number
12004.00

\\vhb\proj\Worcester\12004.00\~From Other Offices\Watertown, MA\project 2012-07-03\12004.00\cad\sr\planset\12004.00-AERIAL.dwg

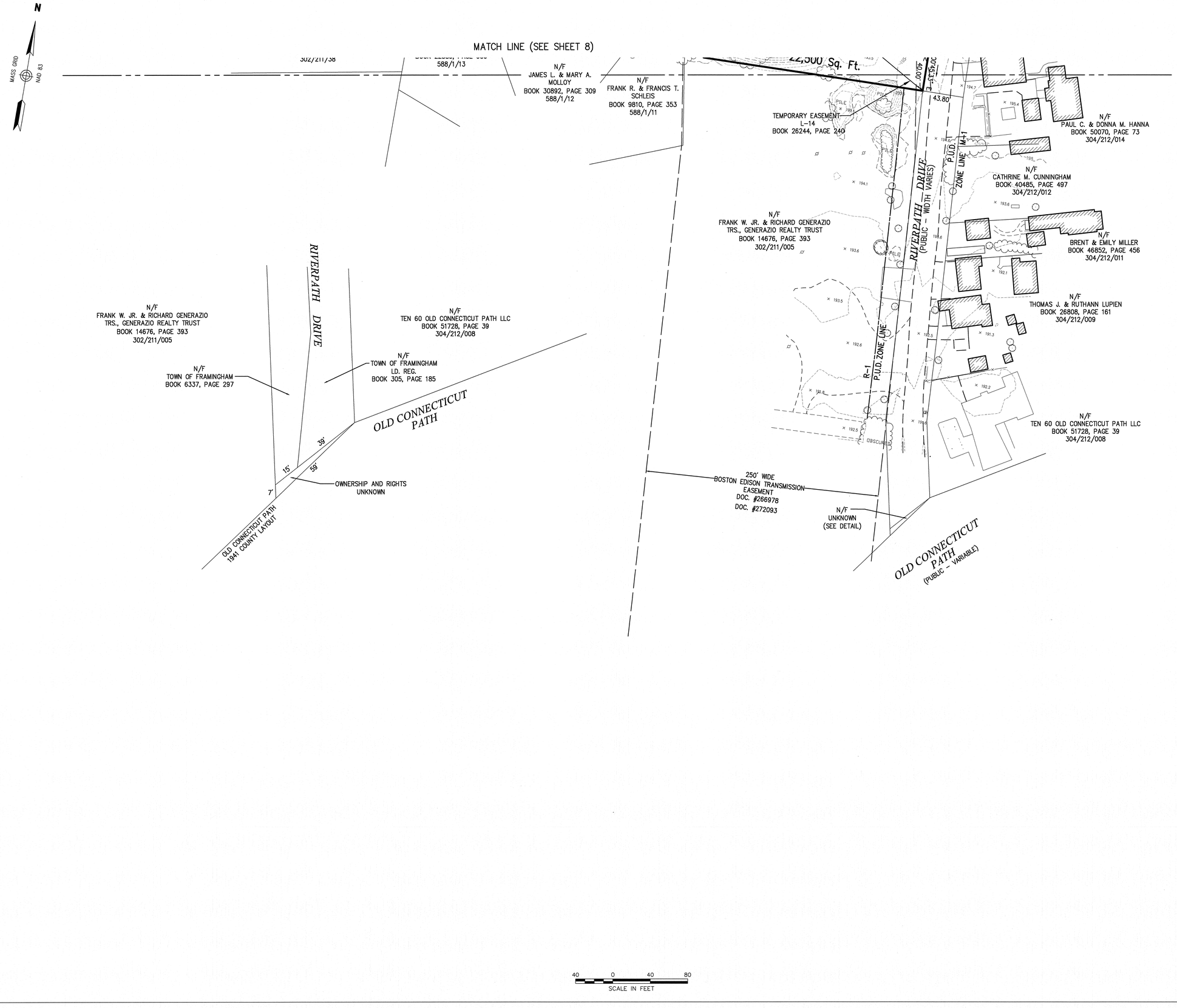

VHB
Vanasse Hangen Brustlin, Inc.
Transportation
Land Development
Environmental Services
101 Walnut Street, P.O. Box 9151
Watertown, Massachusetts 02471-9151
617 924 1770 • FAX 617 924 2286

Legend

- DRAIN MANHOLE
- CATCH BASIN
- SEWER MANHOLE
- ELECTRIC MANHOLE
- TELEPHONE MANHOLE
- MANHOLE
- HH HAND HOLE
- WATER GATE
- FIRE HYDRANT
- GAS GATE
- BOLLARD w/LIGHT
- STREET SIGN
- LIGHT POLE
- UTILITY POLE
- GUY POLE
- GUY WIRE
- MONITORING WELL
- FLOOD LIGHT
- W WELL
- TREE
- MARSH
- F.F.E.=45.27 FINISHED FLOOR ELEVATION
- CNO COULD NOT OPEN
- NPV NO PIPES VISIBLE
- DYL DOUBLE YELLOW LINE
- DWL DASHED WHITE LINE
- SYL SINGLE WHITE LINE
- EOP EDGE OF PAVEMENT
- CC CONCRETE CURB
- VGC VERTICAL GRANITE CURB
- SGE SLOPED GRANITE EDGE
- BB BITUMINOUS BERM
- BC BITUMINOUS CURB
- GUARD RAIL
- CHAIN LINK FENCE
- DRAINAGE LINE
- SEWER LINE
- OHW OVERHEAD WIRE
- E UNDERGROUND ELECTRIC
- T TELEPHONE LINE
- G GAS LINE
- W WATER LINE
- STONE WALL
- TREE LINE
- 100'BZ 100-FT BUFFER ZONE
- 100'RA 100-FT RIVER FRONT AREA
- 200'RA 200-FT RIVER FRONT AREA
- BRT=100' LIMIT MEAN ANNUAL HIGH WATER
- BRT=100' LIMIT OF BANK
- A WF1=100 VEGETATED WETLAND BOUNDARY

No.	Revision	Date	Appvd.

Designed by | Drawn by | Checked by
CAD checked by | Approved by
Scale 1"=40' | Date November 8, 2012

Project Title

Danforth Green, LLC

Framingham, Massachusetts

Issued for

Drawing Title

Existing Conditions Plan of Land

COMMONWEALTH OF MASSACHUSETTS
RUSSELL J. BOURQUET
NO. 35389
REGISTERED
PROFESSIONAL LAND SURVEYOR
11/14/12

Drawing Number
Sv-9

Sheet 9 of 9

Project Number
12004.00

\\vhb\proj\Worcester\12004.00\~From Other Offices\Watertown, MA\arc.pct
2012-07-03\12004.00\cad\sr\planset\12004.00-AERIAL.dwg

FRAMINGHAM
DANFORTH GREEN
PHASE 1A
ALIGNMENT PLANS
OLD CONNECTICUT PATH AT RIVERPATH DR.
LOCATION 3
SHEET 13 OF 21

OLD CONNECTICUT PATH CONSTRUCTION BASELINE DATA

DESCRIPTION	TANGENT/CURVE DATA		NORTHING	EASTING
PC STA 44+83.83	R = 1000.00'	Δ = 20°28'14"	2944010.2602	687095.2917
	L = 357.28'	T = 180.56'		
PT STA 48+41.11	L = 117.22'	N57°50'29"E	2944249.8665	687357.7511
PC STA 49+58.23	L = 117.20'	Δ = 1°20'35"	2944312.2579	687456.9862
	R = 5000.00'	T = 58.60'		

CURVE TABLE

CURVE	RADIUS (FT)	LENGTH (FT)	TANGENT (FT)	DELTA
9	500.00	61.26	30.67	7°01'12
10	500.00	17.60	8.80	2°01'02"
11	1500.00	120.62	60.34	4°36'27"
12	50.00	43.96	23.51	50°22'10"
13	30.00	56.75	41.58	108°22'38"
14	388.00	101.74	51.17	15°01'29"
15	500.00	59.11	29.59	6°46'26"
16	1000.00	85.25	42.65	4°53'04"
17	28.0±	20.6±	10.8±	42°12'

RIVERPATH DRIVE BASELINE DATA

DESCRIPTION	TANGENT/CURVE DATA		NORTHING	EASTING
BEGIN STA 300+00	L = 36.39'	N42°46'06"W	2944138.8423	687212.5491
PC STA 300+36.39	L = 26.99'	Δ = 30°55'21"	2944165.5570	687187.8384
	R = 50.00'	T = 13.83'		
PT STA 300+63.38	L = 51.11'	N11°50'45"W	2944189.2450	687175.6085
PC STA 301+14.48	L = 58.29'	Δ = 08°21'00"	2944239.2636	687165.1173
PT STA 301+67.76	R = 400.00'	T = 29.20'	2944296.9848	687157.3431
END STA 304+80.17	L = 65.79'	N03°29'45"W	2944362.6567	687153.3314

Improvements shown hereon are presented for discussion purposes only and will be revised based on final design of Riverpath Drive.

SURVEY TRAVERSE DATA

POINT	ELEVATION	NORTHING	EASTING	DESCRIPTION
25	187.40'	2943863.8350	686952.0239	DH SET
44	192.58'	2944358.2275	687490.2113	PK SET
89	189.91'	2944086.7596	687186.3078	PK SET

STA 300+00.00 RIVERPATH DRIVE ℄ =
STA 46+58.07 OLD CONNECTICUT PATH ℄

SCALE IN FEET

CONT. ON SHEET 13
CONT. ON SHEET 15

\\vhb\proj\Wat-LD\09702.00\cad\te\planset\Phase_1A\09702-Align.

Danforth Green, LLC.

Framingham, Massachusetts

Landscape Plans

List of Drawings:		Set Issue Date
L1.0	Site Landscape Reference Plan	4/16/13
L1.1	Common Area Planting Plan & Plant List	4/16/13
L1.2	Common Area Planting Plan	4/16/13
L1.3	Common Area Planting Plan	4/16/13
L1.4	Common Area Entrance Planting Plan	4/16/13
L2.1	Typical Buildings 100 & 200 Planting Plans	4/16/13
L2.2	Typical Buildings 201, 204 & 209 Planting Plans	4/16/13
L2.3	Typical Cottage Planting Plans	4/16/13
L2.4	Typical Townhouse Planting Plans	4/16/13
L3.1	Amenity Area Landscape Plan	4/16/13
L4.1	Site Lighting Plan	4/16/13
L5.1	Planting Details	4/16/13
L5.2	Planting Notes	4/16/13
SKL1	Typical Condenser Unit & Transformer Planting	4/5/13

Landscape Architect:

Hawk Design, Inc.
Landscape Architecture
Land Planning

Sagamore, MA
508-833-8800
info@hawkdesigninc.com

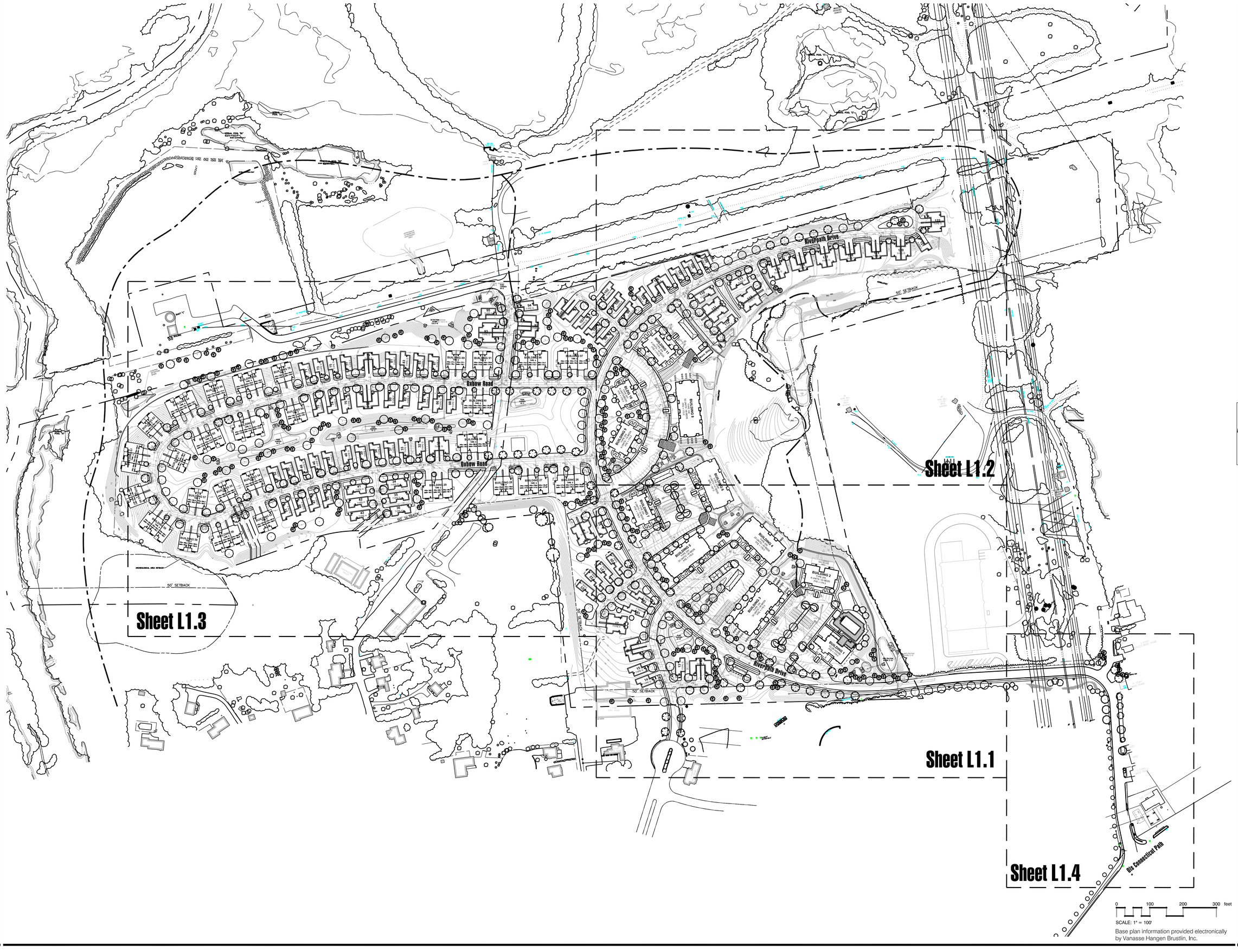

Base plan information provided electronically by Vanasse Hangen Brustlin, Inc.

Hawk Design, Inc.
Landscape Architecture
Land Planning

Sagamore, MA
508-833-8800
Info@hawkdesigninc.com
www.hawkdesigninc.com

HAWK DESIGN, INC. 2012

THIS DRAWING AND ALL INFORMATION CONTAINED HEREON IS PROPRIETARY INFORMATION OF HAWK DESIGN, INC. AND MAY NOT BE COPIED OR REPRODUCED, EITHER IN WHOLE OR IN PART, BY ANY METHOD, WITHOUT WRITTEN PERMISSION OF HAWK DESIGN, INC.

Date: 11/13/12

Revisions:

Num.	Date	Description
1.	1/29/13	Signage revision, add Option B Townhouse 1,2 & 3, add typical townhouse streetscape
2.	2/26/13	Per Planning Board and peer review comments
3.	4/1/13	Revise per site plan revisions
4.	4/5/13	Per Planning Board and peer review comments
5.	4/16/13	Per site plan revisions, Planning Board & peer review comments

MASSACHUSETTS
THOMAS E. HAWK
REGISTERED LANDSCAPE ARCHITECT
NO. 978
4/16/13

Danforth Green, LLC.

Framingham, Massachusetts

Drawn By: BNL | Checked By: TM

Site Landscape Reference Plan

Scale: 1" = 100'-0"

Sheet: **L1.0**

PLANT SCHEDULE COMMON AREA

TREES	QTY	BOTANICAL NAME	COMMON NAME	CONT	CAL	SIZE
AR	85	Acer rubrum `Red Sunset`	Red Sunset Red Maple	B & B	3-3.5" CAL.	
AR-B	20	Acer rubrum `Bowhall`	Red Maple	B & B	3-3.5" CAL.	
AS	44	Acer saccharum `Green Mountain`	Green Mountain Sugar Maple	B & B	3-3.5" CAL.	
LT	14	Liriodendron tulipifera	Tulip Tree	B & B	3-3.5" CAL.	
PA	46	Platanus acerifolia `Bloodgood`	Bloodgood London Plane Tree	B & B	3-3.5" CAL.	
QR	52	Quercus rubra	Red Oak	B & B	3-3.5" CAL.	
TC	58	Tilia cordata `Greenspire`	Greenspire Littleleaf Linden	B & B	3-3.5" CAL.	
UA	25	Ulmus americana `Valley Forge`	American Elm	B & B	3-3.5" CAL.	

EVERGREEN TREES	QTY	BOTANICAL NAME	COMMON NAME	CONT	CAL	SIZE
AC	45	Abies concolor	White Fir	B & B		8-10` HT.
PG	51	Picea glauca	White Spruce	B & B		8-10` HT.
PM	6	Pseudotsuga menziesii	Douglas Fir	B & B		8-10` HT.
PP	86	Picea pungens	Colorado Spruce	B & B		8-10` HT.
PPG	4	Picea pungens glauca	Colorado Blue Spruce	B & B		8-10` HT.

FLOWERING TREES	QTY	BOTANICAL NAME	COMMON NAME	CONT	CAL	SIZE
AG-RH	2	Amelanchier x grandiflora `Robin Hill`	Robin Hill Serviceberry	B & B		8-10` HT.
CR-S	6	Cornus x rutgersensis `Stellar Pink`	Pink Flowering Stellar Dogwood	B & B	3-3.5" CAL.	
M-HG	8	Malus x `Harvest Gold`	Crab Apple	B & B	3-3.5" CAL.	
M-PS	21	Malus x `Pink Spires`	Pink Spires Crab Apple	B & B	3-3.5" CAL.	
M-VP	17	Malus x `Velvet Pillar`	Pink Crabapple	B & B	3-3.5" CAL.	
OA	6	Oxydendrum arboreum	Sourwood Tree	B & B	3-3.5" CAL.	
P-O	15	Prunus x okame	Okame Cherry	B & B	3-3.5" CAL.	
PS-C	13	Prunus sargentii `Columnaris`	Columnar Sargent Cherry	B & B	3-3.5" CAL.	

SHRUBS	QTY	BOTANICAL NAME	COMMON NAME	CONT	CAL	SIZE
CA-KF	13	Calamagrostis x acutiflora `Karl Foerster`	Feather Reed Grass	3 GAL		
EF-M	25	Euonymus fortunei `Moonshadow`	Moonshadow Euonymus	B & B		18-24" HT.
FI-NG	22	Forsythia x intermedia `New Hampshire Gold`	New Hampshire Gold Forsythia	B & B		3-3.5` HT.
HS-AR	2	Hibiscus syriacus `Ardens`	Double Blue Rose of Sharon	B & B		5-6` HT.
IG-C	35	Ilex glabra `Compacta`	Compact Inkberry	B & B		2-2.5` HT.
IG-S	8	Ilex glabra `Shamrock`	Shamrock Inkberry	B & B		2-2.5` HT.
JS-BS	103	Juniperus scopulorum `Blue Star`	Blue Star Juniper	B & B		18-24" SPD.
PA-H	16	Pennisetum alopecuroides `Hameln`	Hameln Dwarf Fountain Grass	2 GAL		
PF-A	12	Potentilla fruticosa `Abbotswood`	Abbotswood Potentilla	B & B		18-24" HT.
R-PJM	8	Rhododendron `PJM`	PJM Rhododendron	B & B		3-3.5` HT.
TM-T	12	Taxus x media `Taunton`	Taunton Yew	B & B		2-2.5` HT.
VD-B	19	Viburnum dentatum `Blue Muffin`	Blue Muffin Arrowwood	B & B		4-5` HT.

GROUND COVERS	QTY	BOTANICAL NAME	COMMON NAME	CONT
DL	64	Daylily	Daylily	1 gal@ 24" oc
DL-PS	11	Hemerocallis x `Purple Stella de Oro`	Purple Stella de Oro Daylily	1 gal@ 24" oc
H-LB	12	Hemerocallis x `Little Business`	Little Business Daylily	1 gal@ 24" oc
H-PP	12	Heuchera x `Palace Purple`	Palace Purple Coral Bells	1 gal@ 24" oc
H-SD	25	Hemerocallis x `Stella de Oro`	Stella de Oro Daylily	1 gal@ 24" oc
SC	11	Seasonal Color	Seasonal Color	1 gal@ 18" oc

Seeding Note:

1. All slopes steeper than 4:1 to be loamed, fine graded, seeded and stabilized with an erosion control blanket. Seed blend to be New England Erosion Control / Restoration Mix by New England Wetland Plants (or approved equal) consisting of: Virginia Wild Rye, Creeping Red Fescue, Little Bluestem, Big Bluestem, Fox Sedge, Switch Grass, Rough Bentgrass, New England Aster, Boneset, Grass Leaved Goldenrod, Green Bulrush, Blue Vervain, Soft Rush & Wool Grass
2. All disturbed areas to be seeded using Lesco Fenway Water Mix consisting of 75% turf type tall fescue and 25% improved perennial ryegrass or approved equal.

Culvert Note:

1. All flared ends of culverts and overflow swales for rain gardens shall use riverstone. Refer to engineer's plans for locations.

0 40 80 120 feet

SCALE: 1" = 40'

Base plan information provided electronically by Vanasse Hangen Brustlin, Inc.

Hawk Design, Inc.
Landscape Architecture
Land Planning
Sagamore, MA
508-833-8800
Info@hawkdesigninc.com
www.hawkdesigninc.com

HAWK DESIGN, INC. 2012

THIS DRAWING AND ALL INFORMATION CONTAINED HEREON IS PROPRIETARY INFORMATION OF HAWK DESIGN, INC. AND MAY NOT BE COPIED OR REPRODUCED, EITHER IN WHOLE OR IN PART, BY ANY METHOD, WITHOUT WRITTEN PERMISSION OF HAWK DESIGN, INC.

Date: 11/13/12

Revisions:

Num.	Date	Description
1.	1/29/13	Signage revision, add Option B Townhouse 1,2 & 3, add typical townhouse streetscape
2.	2/26/13	Per Planning Board and peer review comments
3.	4/1/13	Revise per site plan revisions
4.	4/5/13	Per Planning Board and peer review comments
5.	4/16/13	Per site plan revisions, Planning Board & peer review comments

MASSACHUSETTS
JOHN E. MUSTICH
NO. 978
REGISTERED LANDSCAPE ARCHITECT
4/16/13

Danforth Green, LLC.
Framingham, Massachusetts

Drawn By: BNL | Checked By: TM

Common Area Planting Plan & Plant List

Scale: 1" = 40'-0"

Sheet: L1.1

Notes:

1. See Sheet L1.1 for Common Area Plant List
2. See Engineer's plans for rain garden planting plans

0 40 80 120 feet

SCALE: 1" = 40'

Base plan information provided electronically by Vanasse Hangen Brustlin, Inc.

Hawk Design, Inc.
Landscape Architecture
Land Planning

Sagamore, MA
508-833-8800
info@hawkdesigninc.com
www.hawkdesigninc.com

HAWK DESIGN, INC. 2012

THIS DRAWING AND ALL INFORMATION CONTAINED HEREON IS PROPRIETARY INFORMATION OF HAWK DESIGN, INC. AND MAY NOT BE COPIED OR REPRODUCED, EITHER IN WHOLE OR IN PART, BY ANY METHOD, WITHOUT WRITTEN PERMISSION OF HAWK DESIGN, INC.

Date: 11/13/12

Revisions:

Num.	Date	Description
1.	1/29/13	Signage revision, add Option B Townhouse 1,2 & 3, add typical townhouse streetscape
2.	2/26/13	Per Planning Board and peer review comments
3.	4/1/13	Revise per site plan revisions
4.	4/5/13	Per Planning Board and peer review comments
5.	4/16/13	Per site plan revisions, Planning Board & peer review comments

MASSACHUSETTS
THOMAS E. MEIER
NO. 918
REGISTERED LANDSCAPE ARCHITECT
4/16/13

Danforth Green, LLC.

Framingham, Massachusetts

Drawn By: BNL | Checked By: TM

Common Area Planting Plan

Scale: 1" = 40'-0"

Sheet: **L1.2**

Notes:

1. See Sheet L1.1 for Common Area Plant List
2. See Engineer's plans for rain garden planting plans

0 40 80 120 feet

SCALE: 1" = 40'

Base plan information provided electronically by Vanasse Hangen Brustlin, Inc.

Hawk Design, Inc.
Landscape Architecture
Land Planning
Sagamore, MA
508-833-8880
Info@hawkdesigninc.com
www.hawkdesigninc.com

HAWK DESIGN, INC. 2012

THIS DRAWING AND ALL INFORMATION CONTAINED HEREON IS PROPRIETARY INFORMATION OF HAWK DESIGN, INC. AND MAY NOT BE COPIED OR REPRODUCED, EITHER IN WHOLE OR IN PART, BY ANY METHOD, WITHOUT WRITTEN PERMISSION OF HAWK DESIGN, INC.

Date: 11/13/12

Revisions:

Num.	Date	Description
1.	1/29/13	Signage revision, add Option B Townhouse 1,2 & 3, add typical townhouse streetscape
2.	2/26/13	Per Planning Board and peer review comments
3.	4/1/13	Revise per site plan revisions
4.	4/5/13	Per Planning Board and peer review comments
5.	4/16/13	Per site plan revisions, Planning Board & peer review comments

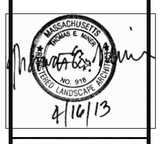

Danforth Green, LLC.
Framingham, Massachusetts

Drawn By: BNL | Checked By: TM

Common Area Planting Plan

Scale: 1" = 40'-0"

Sheet: **L1.3**

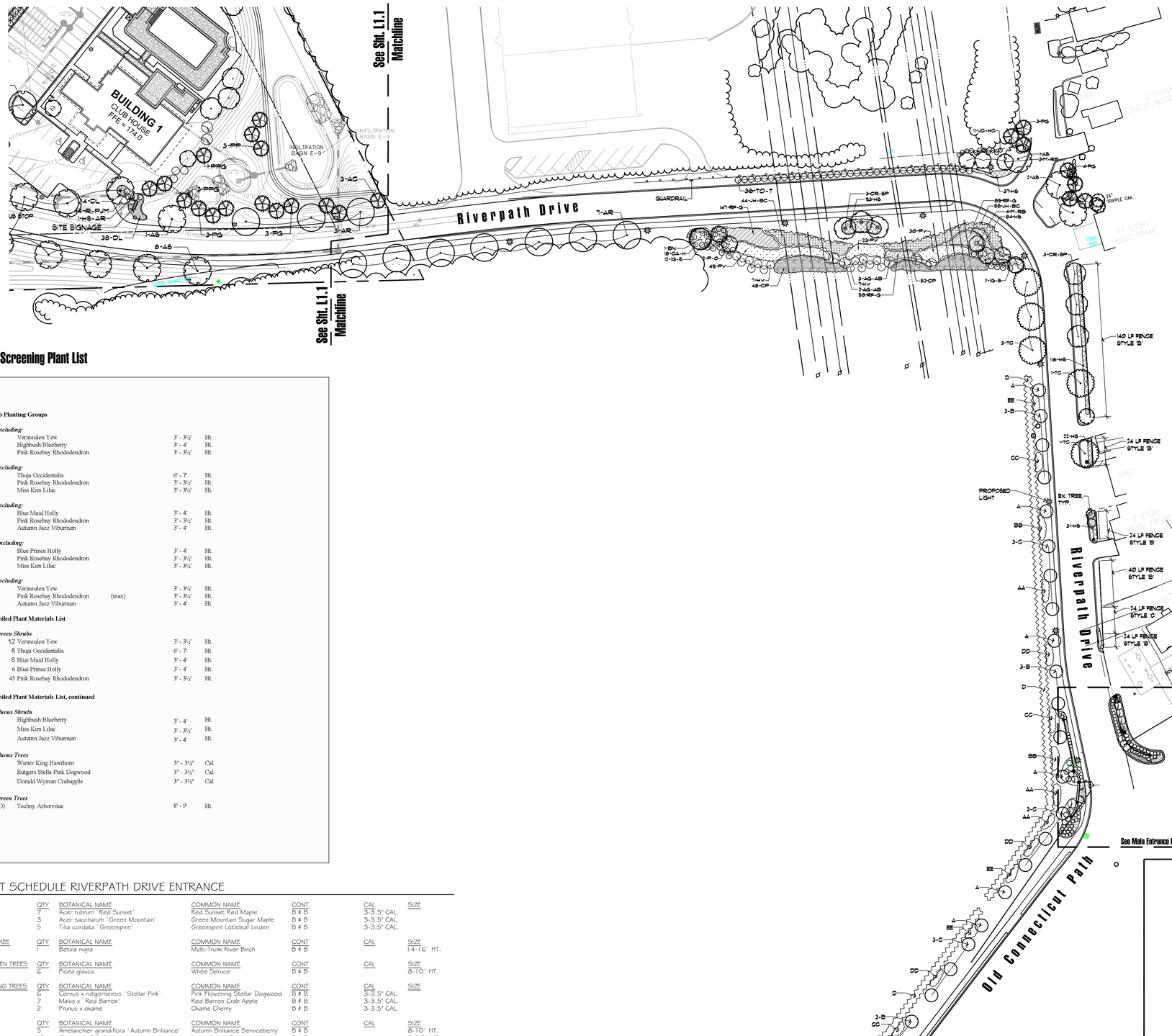

NSTAR Screening Plant List

Shrub Planting Groups

AA, including:

2	Vermeulen Yew	3' - 3½'	Ht.
2	Highbush Blueberry	3' - 4'	Ht.
3	Pink Rosebay Rhododendron	3' - 3½'	Ht.

BB, including:

2	Thuja Occidentalis	6' - 7'	Ht.
3	Pink Rosebay Rhododendron	3' - 3½'	Ht.
1	Miss Kim Lilac	3' - 3½'	Ht.

CC, including:

2	Blue Maid Holly	3' - 4'	Ht.
3	Pink Rosebay Rhododendron	3' - 3½'	Ht.
2	Autumn Jazz Viburnum	3' - 4'	Ht.

DD, including:

2	Blue Prince Holly	3' - 4'	Ht.
3	Pink Rosebay Rhododendron	3' - 3½'	Ht.
2	Miss Kim Lilac	3' - 3½'	Ht.

EE, including:

2	Vermeulen Yew		3' - 3½'	Ht.
3	Pink Rosebay Rhododendron	(max)	3' - 3½'	Ht.
2	Autumn Jazz Viburnum		3' - 4'	Ht.

Compiled Plant Materials List

Evergreen Shrubs

12	Vermeulen Yew	3' - 3½'	Ht.
6	Thuja Occidentalis	6' - 7'	Ht.
6	Blue Maid Holly	3' - 4'	Ht.
6	Blue Prince Holly	3' - 4'	Ht.
45	Pink Rosebay Rhododendron	3' - 3½'	Ht.

Compiled Plant Materials List, continued

Deciduous Shrubs

6	Highbush Blueberry	3' - 4'	Ht.
9	Miss Kim Lilac	3' - 3½'	Ht.
12	Autumn Jazz Viburnum	3' - 4'	Ht.

Deciduous Trees

7 (A)	Winter King Hawthorn	3" - 3½"	Cal.
9 (B)	Rutgers Stella Pink Dogwood	3" - 3½"	Cal.
9 (C)	Donald Wyman Crabapple	3" - 3½"	Cal.

Evergreen Trees

145 (D)	Techny Arborvitae	8' - 9'	Ht.

PLANT SCHEDULE RIVERPATH DRIVE ENTRANCE

TREES	QTY	BOTANICAL NAME	COMMON NAME	CONT	CAL	SIZE
AR	7	Acer rubrum `Red Sunset`	Red Sunset Red Maple	B & B	3-3.5" CAL.	
AS	3	Acer saccharum `Green Mountain`	Green Mountain Sugar Maple	B & B	3-3.5" CAL.	
TC	5	Tilia cordata `Greenspire`	Greenspire Littleleaf Linden	B & B	3-3.5" CAL.	
CLUMP TREE	**QTY**	**BOTANICAL NAME**	**COMMON NAME**	**CONT**	**CAL**	**SIZE**
BN	1	Betula nigra	Multi-Trunk River Birch	B & B		14-16' HT.
EVERGREEN TREES	**QTY**	**BOTANICAL NAME**	**COMMON NAME**	**CONT**	**CAL**	**SIZE**
PG	6	Picea glauca	White Spruce	B & B		8-10' HT.
FLOWERING TREES	**QTY**	**BOTANICAL NAME**	**COMMON NAME**	**CONT**	**CAL**	**SIZE**
CR-SP	6	Cornus x rutgersensis `Stellar Pink`	Pink Flowering Stellar Dogwood	B & B	3-3.5" CAL.	
M-RB	7	Malus x `Red Barron`	Red Barron Crab Apple	B & B	3-3.5" CAL.	
P-O	2	Prunus x okame	Okame Cherry	B & B	3-3.5" CAL.	
SHRUBS	**QTY**	**BOTANICAL NAME**	**COMMON NAME**	**CONT**	**CAL**	**SIZE**
AG-AB	5	Amelanchier grandiflora `Autumn Brilliance`	Autumn Brilliance Serviceberry	B & B		8-10' HT.
CA-H	18	Clethra alnifolia `Hummingbird`	Hummingbird Summersweet	B & B		2-2.5' HT.
CA-W1	3	Cornus alba `Ivory Halo`	Variegated Redtwig Dogwood	B & B		3-3.5' HT.
HS-AR	4	Hibiscus syriacus `Ardens`	Double Blue Rose of Sharon	B & B		5-6' HT.
HS-BS	1	Hibiscus syriacus `Blue Satin`	Blue Satin Rose-of-Sharon	B & B		5-6' HT.
HS-L	2	Hibiscus syriacus `Lucy`	Lucy Rose of Sharon	B & B		4-5' HT.
HV	14	Hamamelis vernalis	Spring Blooming Witchhazel	B & B		3-4' HT
IG-N	8	Ilex glabra `Nordic`	Nordic Inkberry	B & B		3-4' HT
IG-S	23	Ilex glabra `Shamrock`	Shamrock Inkberry	B & B		2-2.5' HT.
JC-HC	11	Juniperus chinensis `Hetzii Columnaris`	Hetzi Column Juniper	B & B		6-7' HT.
JH-B	14	Juniperus horizontalis `Blue Chip`	Blue Chip Juniper	Cont.		18-24" SPD.
MS-G	3	Miscanthus sinensis `Gracillimus`	Maiden Grass	3 GAL		
PA-H	9	Pennisetum alopecuroides `Hameln`	Hameln Dwarf Fountain Grass	2 GAL		
R-PJM	8	Rhododendron `PJM`	PJM Rhododendron	B & B		3-3.5' HT.
RO-K	10	Rosa x `Knockout`	Knockout Rose	3 GAL		
SJ-G	22	Spiraea japonica `Goldflame`	Goldflame Spirea	B & B		18-24" HT.
TO-E10	4	Thuja occidentalis `Emerald Green`	Emerald Green Arborvitae	B & B		10-12' HT.
TO-EG	6	Thuja occidentalis `Emerald Green`	Emerald Green Arborvitae	B & B		8-10' HT.
TO-T	36	Thuja occidentalis `Techny`	Techny Arborvitae	B & B		8-10' HT.
SHRUB AREAS	**QTY**	**BOTANICAL NAME**	**COMMON NAME**	**CONT**		
JH-BC	99	Juniperus horizontalis `Blue Chip`	Blue Chip Juniper	3 gal@ 48" oc		
GROUND COVERS	**QTY**	**BOTANICAL NAME**	**COMMON NAME**	**CONT**		
CP	100	Comptonia peregrina	Sweet Fern	18-24" HT. @ 48" oc		
DL	43	Daylily	Daylily	1 gal@ 24" oc		
HS	397	Hemerocallis Mixed	Daylily Mixed - Equal Qty.	1 gal@ 24" oc		
PV	102	Panicum virgatum	Switch Grass	2 gal@ 48" oc		
RF-G	294	Rudbeckia fulgida `Goldsturm`	Goldsturm Black-eyed Susan	1 gal@ 24" oc		
SC	55	Seasonal Color	Seasonal Color	1 gal@ 18" oc		

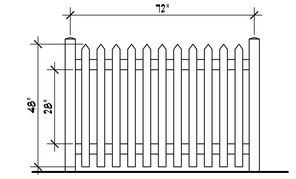

Fence Style 'D'
Scale: 1/2" = 1'-0"

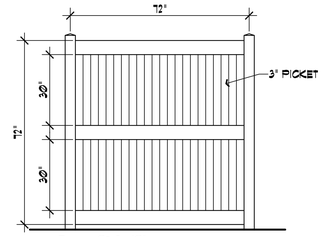

Fence Style 'C'
Scale: 1/2" = 1'-0"

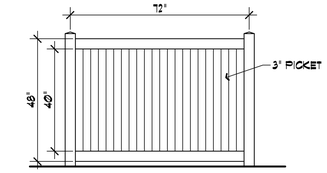

Fence Style 'B'
Scale: 1/2" = 1'-0"

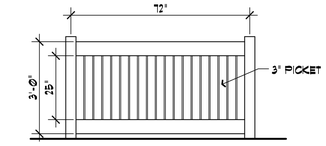

Fence Style 'A'
Scale: 1/2" = 1'-0"

Note:
All fence material to be cedar and stained white

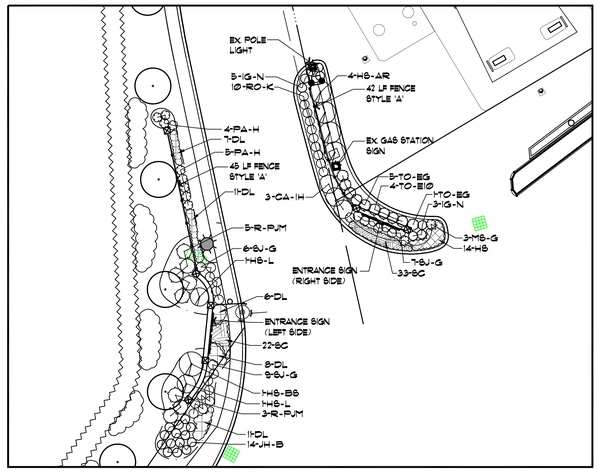

Main Entrance Enlargement Landscape Plan
Scale: 1" = 20'-0"

Base plan information provided electronically by Vanasse Hangen Brustlin, Inc.

Hawk Design, Inc.
Landscape Architecture
Land Planning
Sagamore, MA
508-833-8800
Info@hawkdesigninc.com
www.hawkdesigninc.com

HAWK DESIGN, INC. 2012

THIS DRAWING AND ALL INFORMATION CONTAINED HEREON IS PROPRIETARY INFORMATION OF HAWK DESIGN, INC. AND MAY NOT BE COPIED OR REPRODUCED, EITHER IN WHOLE OR IN PART, BY ANY METHOD, WITHOUT WRITTEN PERMISSION OF HAWK DESIGN, INC.

Date: 12/19/12

Revisions:

Num.	Date	Description
1.	1/29/13	Signage revision, add Option B Townhouse 1,2 & 3, add typical townhouse streetscape
2.	2/26/13	Per Planning Board and peer review comments
3.	4/1/13	Revise per site plan revisions
4.	4/5/13	Per Planning Board and peer review comments
5.	4/16/13	Per site plan revisions, Planning Board & peer review comments

MASSACHUSETTS JOHN E. MUSTO NO. 978 REGISTERED LANDSCAPE ARCHITECT
4/16/13

Danforth Green, LLC.
Framingham, Massachusetts

Drawn By: BNL | Checked By: TM

Common Area - Entrance Planting Plan

Scale: 1" = 40'-0"

Sheet: **L1.4**

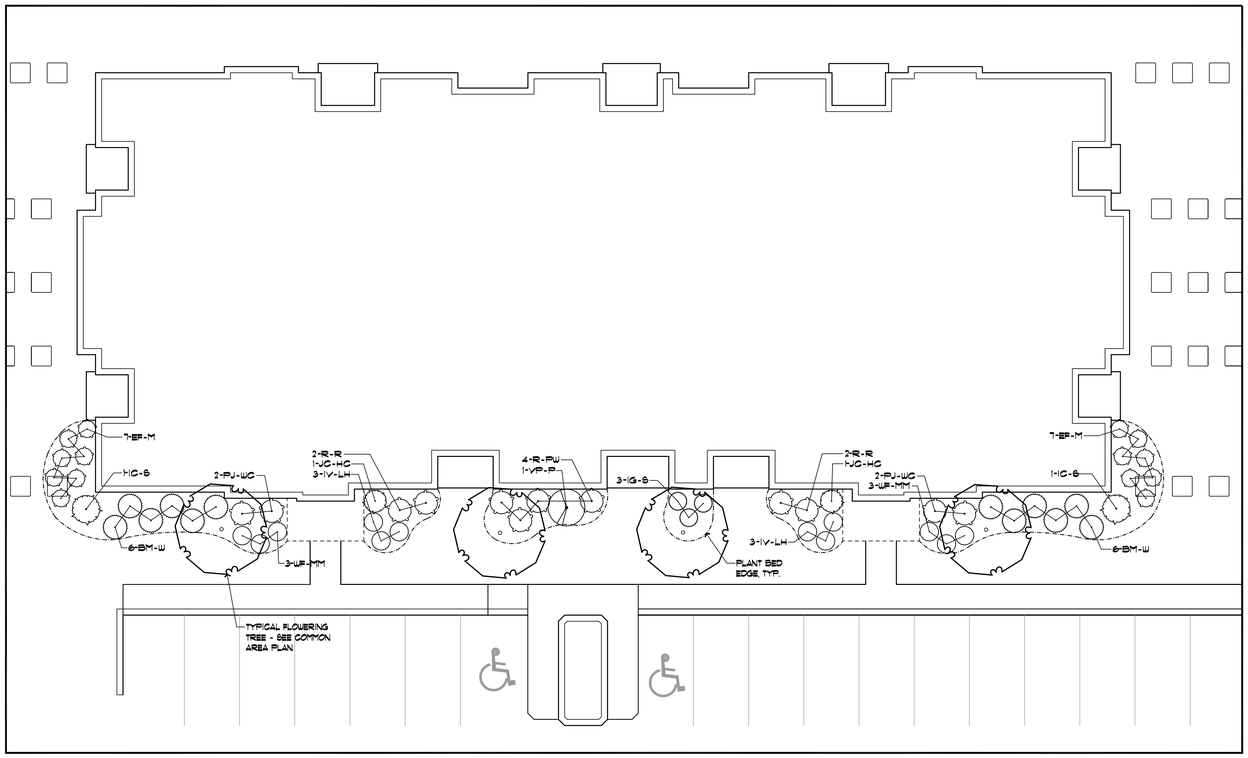

Building Type 100 Typical Planting Plan
Scale: 1" = 10'-0"

PLANT SCHEDULE BUILDING TYPE 100

SHRUBS	QTY	BOTANICAL NAME	COMMON NAME	CONT	CAL	SIZE
BM-W	12	Buxus microphylla `Wintergreen`	Wintergreen Boxwood	B & B		2-2.5` HT.
EF-M	14	Euonymus fortunei `Moonshadow`	Moonshadow Euonymus	B & B		18-24" HT.
IC-S	2	Ilex crenata `Steeds`	Steeds Japanese Holly	B & B		5-6` HT.
IG-S	3	Ilex glabra `Shamrock`	Shamrock Inkberry	B & B		2-2.5` HT.
IV-LH	6	Itea virginica `Little Henry`	Little Henry Sweetspire	B & B		15-18" HT.
JC-HC	2	Juniperus chinensis `Hetzs Columnans`	Hetz Column Juniper	B & B		6-7` HT.
PJ-WC	4	Pieris japonica `White Cascade`	White Cascade Andromeda	B & B		2-2.5` HT.
R-PW	4	Rhododendron `Percy Wiseman`	Percy Wiseman Rhododendron	B & B		2-2.5` HT.
R-R	4	Rhododendron `Ramapo`	Ramapo Rhododendron	B & B		2-2.5` HT.
VP-P	1	Viburnum plicatum `Popcorn`	Popcorn Viburnum	B & B		5-6` HT.
WF-MM	6	Weigela florida `My Monet`	My Monet Weigela	B & B		15-18" HT.

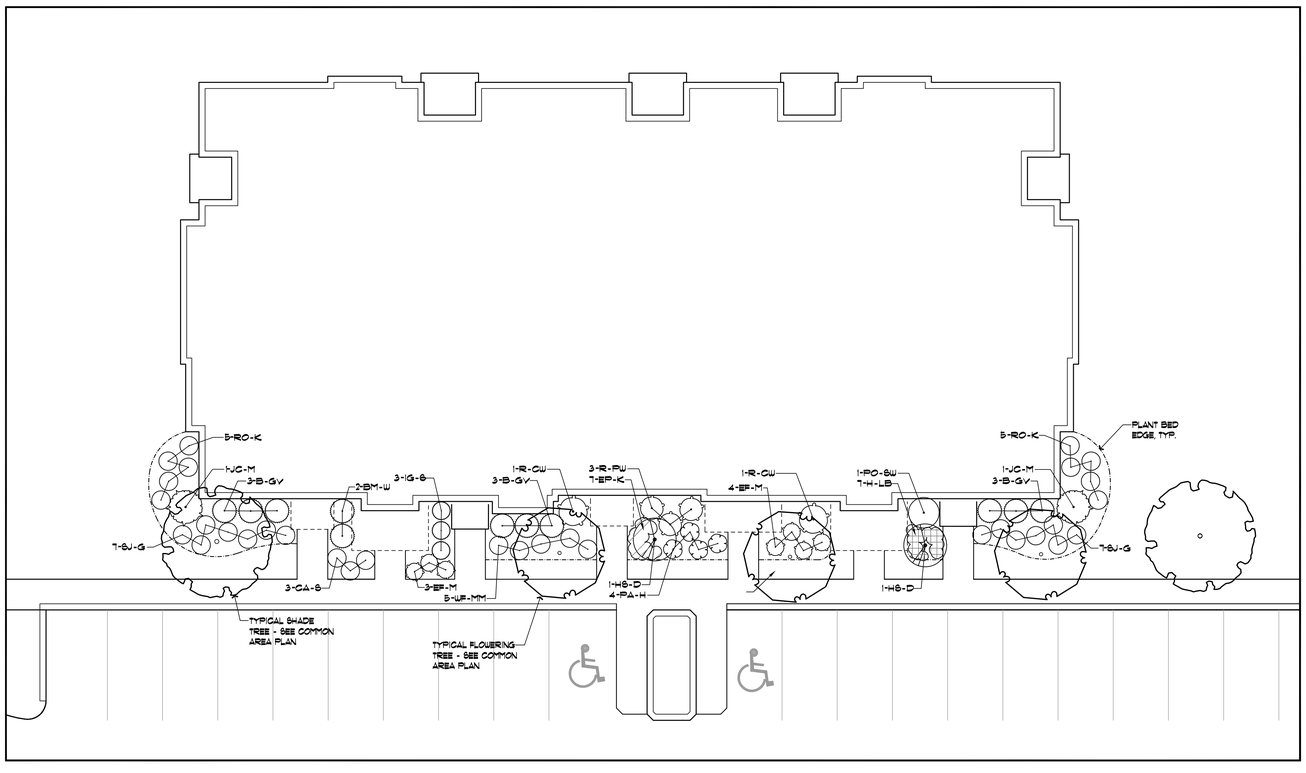

Building Type 200 Typical Planting Plan
Scale: 1" = 10'-0"

PLANT SCHEDULE BUILDING TYPE 200

SHRUBS	QTY	BOTANICAL NAME	COMMON NAME	CONT	SIZE
B-GV	9	Buxus x `Green Velvet`	Green Velvet Boxwood	B & B	2-2.5` HT.
BM-W	2	Buxus microphylla `Wintergreen`	Wintergreen Boxwood	B & B	2-2.5` HT.
CA-S	3	Clethra alnifolia `Sixteen Candles`	Summersweet Clethra	B & B	18-24" HT.
EF-M	7	Euonymus fortunei `Moonshadow`	Moonshadow Euonymus	B & B	18-24" HT.
HS-D	2	Hibiscus syriacus `Diana`	Diana Rose of Sharon	B & B	4-5` HT.
IG-S	3	Ilex glabra `Shamrock`	Shamrock Inkberry	B & B	2-2.5` HT.
JC-M	2	Juniperus chinensis `Mountbatten`	Chinese Juniper	B & B	8-10` HT.
PA-H	4	Pennisetum alopecuroides `Hameln`	Hameln Dwarf Fountain Grass	2 GAL	
PO-SW	1	Physocarpus opulifolius `Summer Wine`	Summer Wine Ninebark	B & B	3-3.5` HT.
R-CW	2	Rhododendron `Cunningham`s White`	Cunningham White Rhododendron	B & B	3-3.5` HT.
R-PW	3	Rhododendron `Percy Wiseman`	Percy Wiseman Rhododendron	B & B	2-2.5` HT.
RO-K	10	Rosa x `Knockout`	Knockout Rose	3 GAL	
SJ-G	14	Spiraea japonica `Goldflame`	Goldflame Spirea	B & B	18-24" HT.
WF-MM	5	Weigela florida `My Monet`	My Monet Weigela	B & B	15-18" HT.

GROUND COVERS	QTY	BOTANICAL NAME	COMMON NAME	CONT
EP-K	7	Echinacea purpurea `Kim`s Knee High`	Purple Coneflower	1 gal@ 24" oc
H-LB	7	Hemerocallis x `Little Business`	Little Business Daylily	1 gal@ 24" oc

0 10 20 30 feet
SCALE: 1" = 10'

Base plan information provided electronically by Vanasse Hangen Brustlin, Inc.

Hawk Design, Inc.
Landscape Architecture
Land Planning
Sagamore, MA
508-833-8800
Info@hawkdesigninc.com
www.hawkdesigninc.com

HAWK DESIGN, INC. 2012

THIS DRAWING AND ALL INFORMATION CONTAINED HEREON IS PROPRIETARY INFORMATION OF HAWK DESIGN, INC. AND MAY NOT BE COPIED OR REPRODUCED, EITHER IN WHOLE OR IN PART, BY ANY METHOD, WITHOUT WRITTEN PERMISSION OF HAWK DESIGN, INC.

Date: 11/13/12

Revisions:

Num.	Date	Description
1.	1/29/13	Signage revision, add Option B Townhouse 1,2 & 3, add typical townhouse streetscape
2.	2/26/13	Per Planning Board and peer review comments
3.	4/1/13	Revise per site plan revisions
4.	4/5/13	Per Planning Board and peer review comments
5.	4/16/13	Per site plan revisions, Planning Board & peer review comments

MASSACHUSETTS
JOHN E. MUSE
NO. 978
REGISTERED LANDSCAPE ARCHITECT
4/16/13

Danforth Green, LLC.
Framingham, Massachusetts

Drawn By: BNL | Checked By: TM

Typical Building Type 100 & 200 Planting Plans

Scale: 1" = 10'-0"

Sheet: **L2.1**

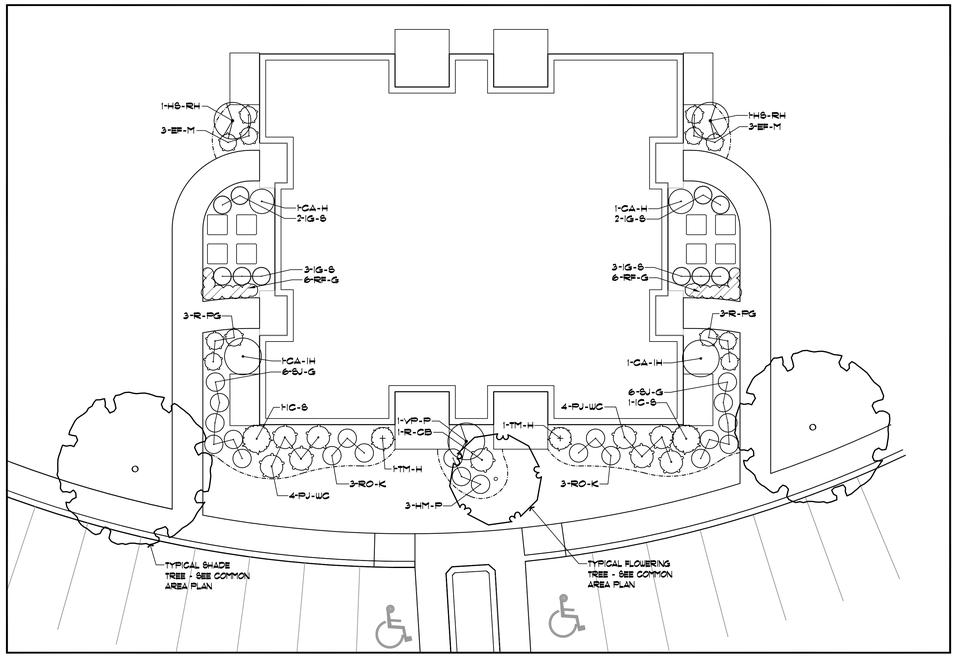

PLANT SCHEDULE BUILDING TYPE 201

SHRUBS	QTY	BOTANICAL NAME	COMMON NAME	CONT	SIZE
CA-H	2	Clethra alnifolia `Hummingbird`	Hummingbird Summersweet	B & B	2'-2.5' HT.
CA-IH	2	Cornus alba `Ivory Halo`	Variegated Redtwig Dogwood	B & B	3-3.5' HT.
EF-M	6	Euonymus fortunei `Moonshadow`	Moonshadow Euonymus	B & B	18-24" HT.
HM-P	3	Hydrangea macrophylla `Pia`	Pia Dwarf Hydrangea	B & B	18-24" HT.
HS-RH	2	Hibiscus syriacus `Red Heart`	Red Heart Rose of Sharon	B & B	4-5' HT.
IC-S	2	Ilex crenata `Steeds`	Steeds Japanese Holly	B & B	5-6' HT.
IG-S	10	Ilex glabra `Shamrock`	Shamrock Inkberry	B & B	2-2.5' HT.
PJ-WC	8	Piens japonica `White Cascade`	White Cascade Andromeda	B & B	2-2.5' HT.
R-CB	1	Rhododendron x `Cunningham`s Blush`	Cunningham`s Blush Rhododendron	B & B	2-2.5' HT.
R-PG	6	Rhododendron `Purple Gem`	Purple Gem Rhododendron	B & B	18-24" HT.
RO-K	6	Rosa x `Knockout`	Knockout Rose	3 GAL	
SJ-G	12	Spiraea japonica `Goldflame`	Goldflame Spirea	B & B	18-24" HT.
TM-H	2	Taxus x media `Hicksii`	Hicks Yew	B & B	3-3.5' HT.
VP-P	1	Viburnum plicatum `Popcorn`	Popcorn Viburnum	B & B	5-6' HT.

GROUND COVERS	QTY	BOTANICAL NAME	COMMON NAME	CONT

Building Type 201 Typical Planting Plan
Scale: 1" = 10'-0"

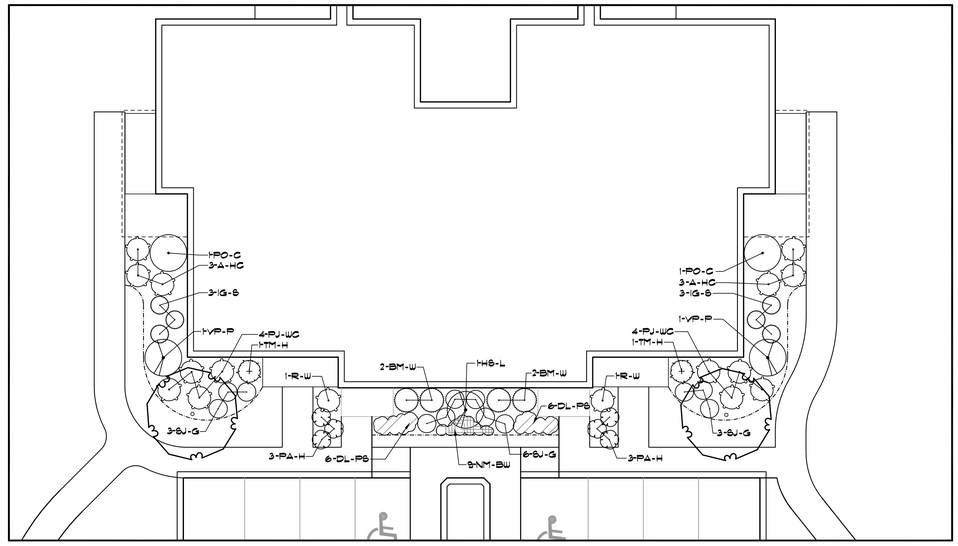

PLANT SCHEDULE BUILDING TYPE 209

SHRUBS	QTY	BOTANICAL NAME	COMMON NAME	CONT	SIZE
A-HC	6	Azalea `Hino-Crimson`	Hino Crimson Azalea	B & B	18-24" HT.
BM-W	4	Buxus microphylla `Wintergreen`	Wintergreen Boxwood	B & B	2-2.5' HT.
HS-L	1	Hibiscus syriacus `Lucy`	Lucy Rose of Sharon	B & B	4-5' HT.
IG-S	6	Ilex glabra `Shamrock`	Shamrock Inkberry	B & B	2-2.5' HT.
PA-H	6	Pennisetum alopecuroides `Hameln`	Hameln Dwarf Fountain Grass	2 GAL	
PJ-WC	8	Piens japonica `White Cascade`	White Cascade Andromeda	B & B	2-2.5' HT.
PO-C	2	Physocarpus opulifolius `Coppertina`	Coppertina Ninebark	B & B	3-3.5' HT.
R-W	2	Rhododendron `Wilsom`	Wilson Rhododendron	B & B	2-2.5' HT.
SJ-G	12	Spiraea japonica `Goldflame`	Goldflame Spirea	B & B	18-24" HT.
TM-H	2	Taxus x media `Hicksii`	Hicks Yew	B & B	3-3.5' HT.
VP-P	2	Viburnum plicatum `Popcorn`	Popcorn Viburnum	B & B	5-6' HT.

GROUND COVERS	QTY	BOTANICAL NAME	COMMON NAME	CONT
DL-PS	12	Hemerocallis x `Purple Stella de Oro`	Purple Stella de Oro Daylily	1 gal@ 24" oc
NM-BW	9	Nepeta mussinii `Blue Wonder`	Blue Wonder Catnip	1 gal@ 18" oc

Building Type 209 Typical Planting Plan
Scale: 1" = 10'-0"

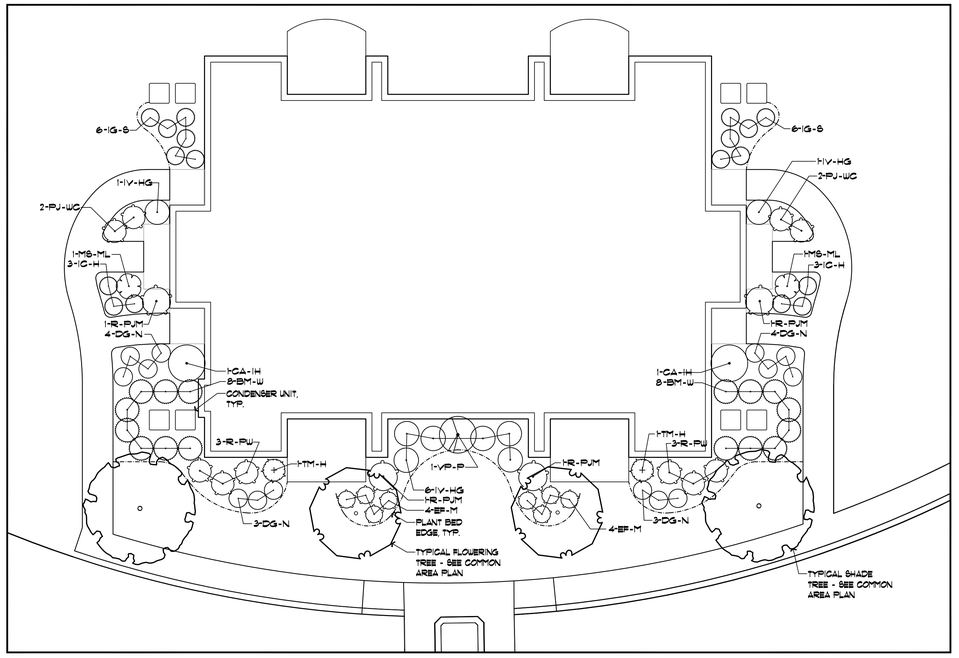

PLANT SCHEDULE BUILDING TYPE 204

SHRUBS	QTY	BOTANICAL NAME	COMMON NAME	CONT	SIZE
BM-W	16	Buxus microphylla `Wintergreen`	Wintergreen Boxwood	B & B	2'-2.5' HT.
CA-IH	2	Cornus alba `Ivory Halo`	Variegated Redtwig Dogwood	B & B	3-3.5' HT.
DG-N	14	Deutzia gracilis `Nikko`	Slender Deutzia	B & B	15-18" HT.
EF-M	8	Euonymus fortunei `Moonshadow`	Moonshadow Euonymus	B & B	18-24" HT.
IC-H	6	Ilex crenata `Hellen`	Heller Japanese Holly	B & B	18-24" HT.
IG-S	12	Ilex glabra `Shamrock`	Shamrock Inkberry	B & B	2-2.5' HT.
IV-HG	8	Itea virginica `Henry`s Garnet`	Henry`s Garnet Sweetspire	B & B	2-2.5' HT.
MS-ML	2	Miscanthus sinensis `Morning Light`	Morning Light Maiden Grass	3 GAL	
PJ-WC	4	Piens japonica `White Cascade`	White Cascade Andromeda	B & B	2-2.5' HT.
R-PJM	4	Rhododendron `PJM`	PJM Rhododendron	B & B	3-3.5' HT.
R-PW	6	Rhododendron `Percy Wiseman`	Percy Wiseman Rhododendron	B & B	2-2.5' HT.
TM-H	2	Taxus x media `Hicksii`	Hicks Yew	B & B	3-3.5' HT.
VP-P	1	Viburnum plicatum `Popcorn`	Popcorn Viburnum	B & B	5-6' HT.

Building Type 204 Typical Planting Plan
Scale: 1" = 10'-0"

Hawk Design, Inc.
Landscape Architecture
Land Planning
Sagamore, MA
508-833-8800
Info@hawkdesigninc.com
www.hawkdesigninc.com

HAWK DESIGN, INC. 2012
THIS DRAWING AND ALL INFORMATION CONTAINED HEREON IS PROPRIETARY INFORMATION OF HAWK DESIGN, INC. AND MAY NOT BE COPIED OR REPRODUCED, EITHER IN WHOLE OR IN PART, BY ANY METHOD, WITHOUT WRITTEN PERMISSION OF HAWK DESIGN, INC.

Date: 11/13/12

Revisions:

Num.	Date	Description
1.	1/29/13	Signage revision, add Option B Townhouse 1,2 & 3, add typical townhouse streetscape
2.	2/26/13	Per Planning Board and peer review comments
3.	4/1/13	Revise per site plan revisions
4.	4/5/13	Per Planning Board and peer review comments
5.	4/16/13	Per site plan revisions, Planning Board & peer review comments

MASSACHUSETTS — THOMAS E. MILLER — REGISTERED LANDSCAPE ARCHITECT — NO. 978
4/16/13

Danforth Green, LLC.
Framingham, Massachusetts

Drawn By: BNL | Checked By: TM

Typical Buildings Type 201, 204 & 209 Planting Plans

Scale: 1" = 10'-0"

Sheet: **L2.2**

0 10 20 30 feet
SCALE: 1" = 10'

Base plan information provided electronically by Vanasse Hangen Brustlin, Inc.

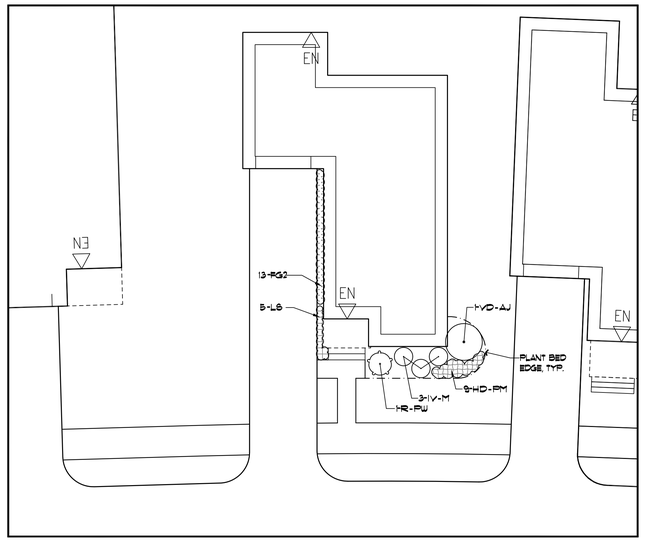

PLANT SCHEDULE COTTAGE F

SHRUBS	QTY	BOTANICAL NAME	COMMON NAME	CONT	SIZE
IV-M	3	Itea virginica `Merlot`	Sweetspire	B & B	15-18" HT.
R-PW	1	Rhododendron `Percy Wiseman`	Percy Wiseman Rhododendron	B & B	2-2.5` HT.
VD-AJ	1	Viburnum dentatum `Autumn Jazz`	Autumn Jazz Viburnum	B & B	5-6` HT.

GROUND COVERS	QTY	BOTANICAL NAME	COMMON NAME	CONT
FG2	13	Festuca glauca	Blue Fescue	1 gal@ 18" oc
HD-PM	9	Heuchera dolce `Peach Melba`	Peach Melba Coral Bells	1 gal@ 18" oc
L5	5	Leucanthemum x superbum	Shasta Daisy	1 gal@ 18" oc

Cottage Style 'F' Typical Planting
Scale: 1" = 10'-0"

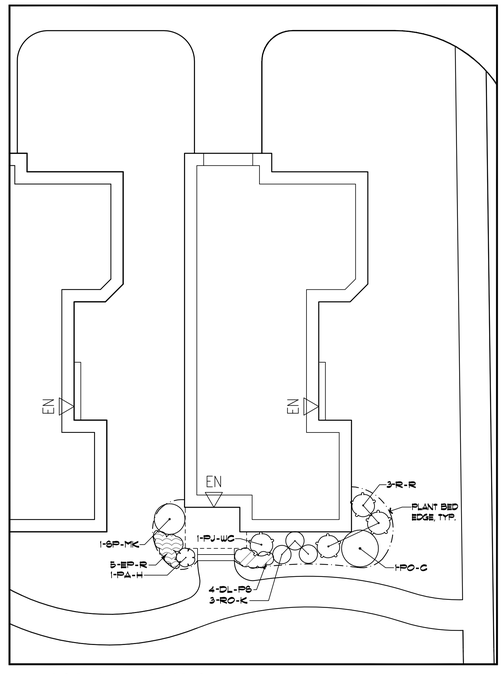

PLANT SCHEDULE COTTAGE H

SHRUBS	QTY	BOTANICAL NAME	COMMON NAME	CONT	SIZE
PA-H	1	Pennisetum alopecuroides `Hameln`	Hameln Dwarf Fountain Grass	2 GAL	
PJ-WC	1	Pieris japonica `White Cascade`	White Cascade Andromeda	B & B	2-2.5` HT.
PO-C	1	Physocarpus opulifolius `Coppertina`	Coppertina Ninebark	B & B	3-3.5` HT.
R-R	3	Rhododendron `Ramapo`	Ramapo Rhododendron	B & B	2-2.5` HT.
RO-K	3	Rosa x `Knockout`	Knockout Rose	3 GAL	
SP-MK	1	Syringa patula `Miss Kim`	Miss Kim Lilac	B & B	3-3.5` HT.

GROUND COVERS	QTY	BOTANICAL NAME	COMMON NAME	CONT
DL-PS	4	Hemerocallis x `Purple Stella de Oro`	Purple Stella de Oro Daylily	1 gal@ 24" oc
EP-R	5	Echinacea purpurea `Rasberry Tart`	Rasberry Tart Coneflower	1 gal@ 24" oc

Cottage Style 'H' Typical Planting
Scale: 1" = 10'-0"

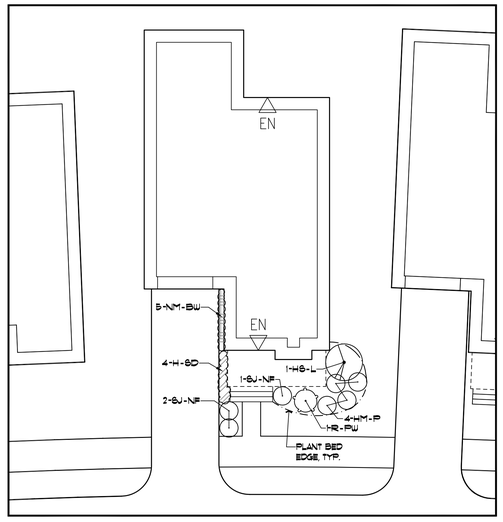

PLANT SCHEDULE COTTAGE G

SHRUBS	QTY	BOTANICAL NAME	COMMON NAME	CONT	SIZE
HM-P	4	Hydrangea macrophylla `Pia`	Pia Dwarf Hydrangea	B & B	18-24" HT.
HS-L	1	Hibiscus synacus `Lucy`	Lucy Rose of Sharon	B & B	4-5` HT.
R-PW	1	Rhododendron `Percy Wiseman`	Percy Wiseman Rhododendron	B & B	2-2.5` HT.
SJ-NF	3	Spiraea japonica `Neon Flash`	Neon Flash Spirea	B & B	18-24" HT.

GROUND COVERS	QTY	BOTANICAL NAME	COMMON NAME	CONT
H-SD	4	Hemerocallis x `Stella de Oro`	Stella de Oro Daylily	1 gal@ 24" oc
NM-BW	5	Nepeta mussinii `Blue Wonder`	Blue Wonder Catnip	1 gal@ 18" oc

Cottage Style 'G' Typical Planting
Scale: 1" = 10'-0"

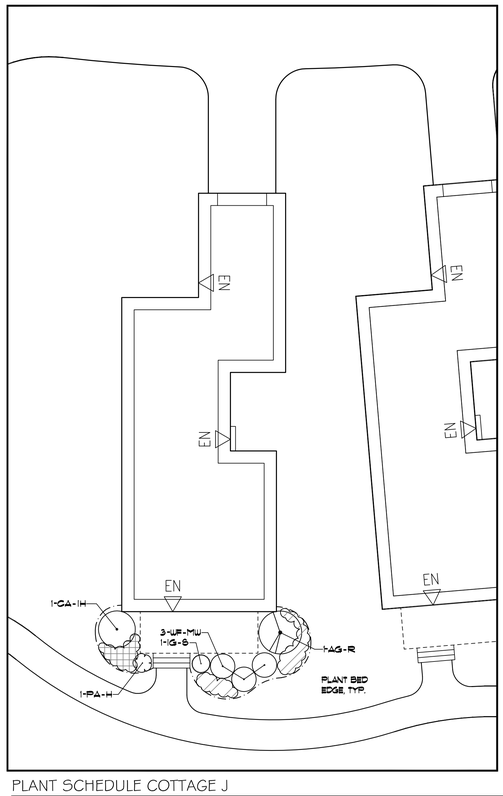

PLANT SCHEDULE COTTAGE J

SHRUBS	QTY	BOTANICAL NAME	COMMON NAME	CONT	SIZE
AG-R	1	Amelanchier x grandiflora `Robin Hill`	Robin Hill Serviceberry	B & B	6-7` HT.
CA-IH	1	Cornus alba `Ivory Halo`	Variegated Redtwig Dogwood	B & B	3-3.5` HT.
IG-S	1	Ilex glabra `Shamrock`	Shamrock Inkberry	B & B	2-2.5` HT.
PA-H	1	Pennisetum alopecuroides `Hameln`	Hameln Dwarf Fountain Grass	2 GAL	
VP-MW	3	Weigela florida `Midnight Wine`	Midnight Wine Weigela	B & B	2-2.5` HT.

GROUND COVERS	QTY	BOTANICAL NAME	COMMON NAME	CONT
EP-K	5	Echinacea purpurea `Km`s Knee High`	Purple Coneflower	1 gal@ 24" oc
H-LB	7	Hemerocallis x `Little Business`	Little Business Daylily	1 gal@ 24" oc
H-SD	8	Hemerocallis x `Stella de Oro`	Stella de Oro Daylily	1 gal@ 24" oc

Cottage Style 'J' Typical Planting
Scale: 1" = 10'-0"

0 10 20 30 feet
SCALE: 1" = 10'

Base plan information provided electronically by Vanasse Hangen Brustlin, Inc.

Hawk Design, Inc.
Landscape Architecture
Land Planning
Sagamore, MA
508-833-8800
Info@hawkdesigninc.com
www.hawkdesigninc.com

HAWK DESIGN, INC. 2012
THIS DRAWING AND ALL INFORMATION CONTAINED HEREON IS PROPRIETARY INFORMATION OF HAWK DESIGN, INC. AND MAY NOT BE COPIED OR REPRODUCED, EITHER IN WHOLE OR IN PART, BY ANY METHOD, WITHOUT WRITTEN PERMISSION OF HAWK DESIGN, INC.

Date: 11/13/12

Revisions:

Num.	Date	Description
1.	1/29/13	Signage revision, add Option B Townhouse 1,2 & 3, add typical townhouse streetscape
2.	2/26/13	Per Planning Board and peer review comments
3.	4/1/13	Revise per site plan revisions
4.	4/5/13	Per Planning Board and peer review comments
5.	4/16/13	Per site plan revisions, Planning Board & peer review comments

MASSACHUSETTS JOHN E. MUSTICH NO. 978 REGISTERED LANDSCAPE ARCHITECT
4/16/13

Danforth Green, LLC.
Framingham, Massachusetts

Drawn By: BNL | Checked By: TM

Typical Cottage Planting Plans

Scale: 1" = 10'-0"

Sheet: L2.3

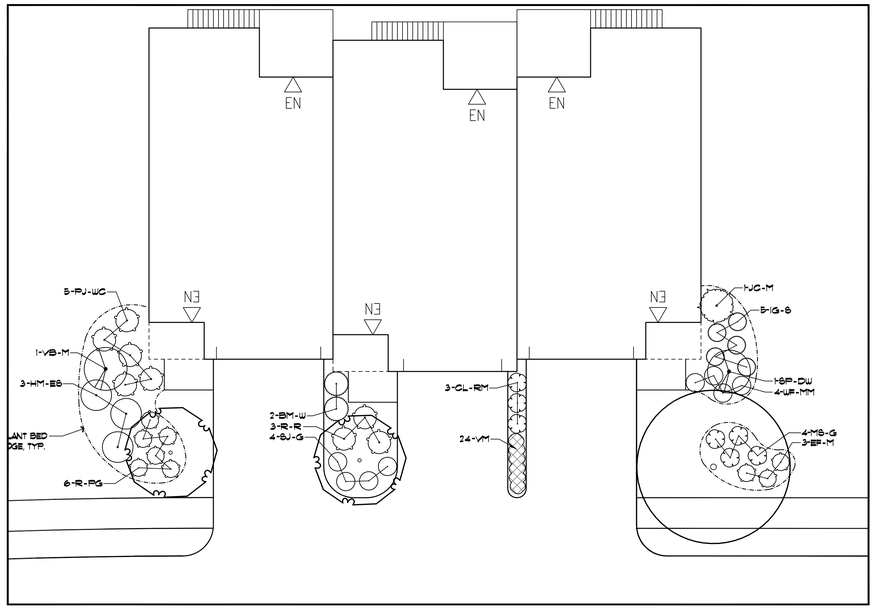

PLANT SCHEDULE TOWNHOUSE TYPE A

SHRUBS	QTY	BOTANICAL NAME	COMMON NAME	CONT	CAL	SIZE
BM-W	2	Buxus microphylla `Wintergreen`	Wintergreen Boxwood	B & B		2-2.5` HT.
CL-RM	3	Chasmanthium latifolium `River Mist`	Variegated Northern Sea Oats	3 GAL		
EF-M	3	Euonymus fortunei `Moonshadow`	Moonshadow Euonymus	B & B		18-24" HT.
HM-ES	3	Hydrangea macrophylla `Endless Summer`	Endless Summer Hydrangea	B & B		3-3.5` HT.
IG-S	5	Ilex glabra `Shamrock`	Shamrock Inkberry	B & B		2-2.5` HT.
JC-M	1	Juniperus chinensis `Mountbatten`	Chinese Juniper	B & B		8-10` HT.
MS-G	4	Miscanthus sinensis `Gracillimus`	Maiden Grass	3 GAL		
PJ-WC	5	Pieris japonica `White Cascade`	White Cascade Andromeda	B & B		2-2.5` HT.
R-PG	6	Rhododendron `Purple Gem`	Purple Gem Rhododendron	B & B		18-24" HT.
R-R	3	Rhododendron `Ramapo`	Ramapo Rhododendron	B & B		2-2.5` HT.
SJ-G	4	Spiraea japonica `Goldflame`	Goldflame Spirea	B & B		18-24" HT.
SP-DW	1	Syringa x prestoniae `Donald Wyman`	Donald Wyman Lilac	B & B		6-8` HT.
VB-M	1	Viburnum x burkwoodii `Mohawk`	Mohawk Viburnum	B & B		5-6` HT.
WF-MM	4	Weigela florida `My Monet`	My Monet Weigela	B & B		15-18" HT.

GROUND COVERS	QTY	BOTANICAL NAME	COMMON NAME	CONT
VM	24	Vinca minor	Common Periwinkle	flat @ 12" oc

Townhouse Type A Typical Planting Plan
Scale: 1" = 10'-0"

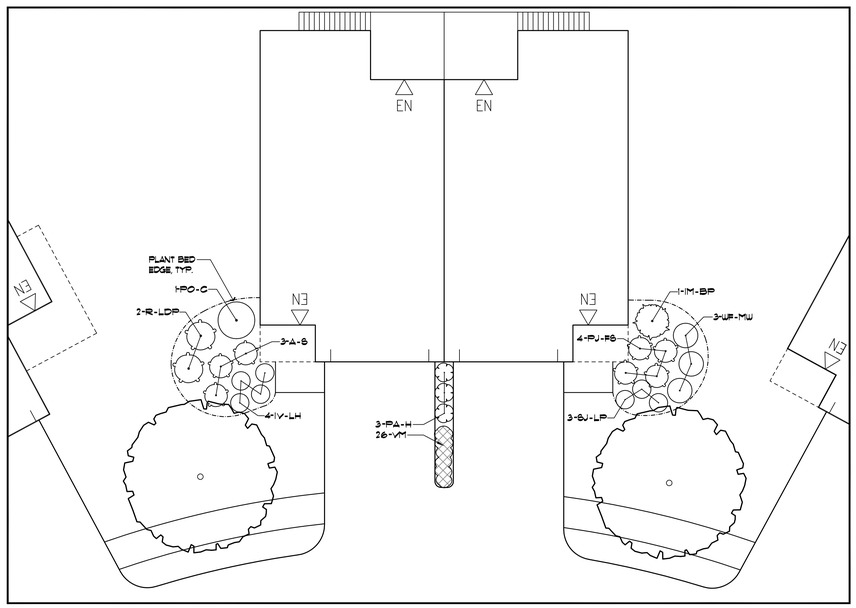

PLANT SCHEDULE TOWNHOUSE TYPE E

SHRUBS	QTY	BOTANICAL NAME	COMMON NAME	CONT	CAL	SIZE
A-S	3	Azalea x `Silversword`	Silversword Azalea	B & B		2-2.5` HT.
IM-BP	1	Ilex x meservae `Blue Princess`	Blue Princess Holly	B & B		6-8` HT.
IV-LH	4	Itea virginica `Little Henry`	Little Henry Sweetspire	B & B		15-18" HT.
PA-H	3	Pennisetum alopecuroides `Hameln`	Hameln Dwarf Fountain Grass	2 GAL		
PJ-FS	4	Pieris japonica `Flaming Silver`	Flaming Silver Andromeda	B & B		2-2.5` HT.
PO-C	1	Physocarpus opulifolius `Coppertina`	Coppertina Ninebark	B & B		3-3.5` HT.
R-LDP	2	Rhododendron `Lee's Dark Purple`	Lee's Dark Purple Rhododendron	B & B		3-3.5` HT.
SJ-LP	3	Spiraea japonica `Lemon Princess`	Lemon Princess Spirea	B & B		15-18" HT.
WF-MW	3	Weigela florida `Midnight Wine`	Midnight Wine Weigela	B & B		2-2.5` HT.

GROUND COVERS	QTY	BOTANICAL NAME	COMMON NAME	CONT
VM	26	Vinca minor	Common Periwinkle	flat @ 12" oc

Townhouse Type E Typical Planting Plan
Scale: 1" = 10'-0"

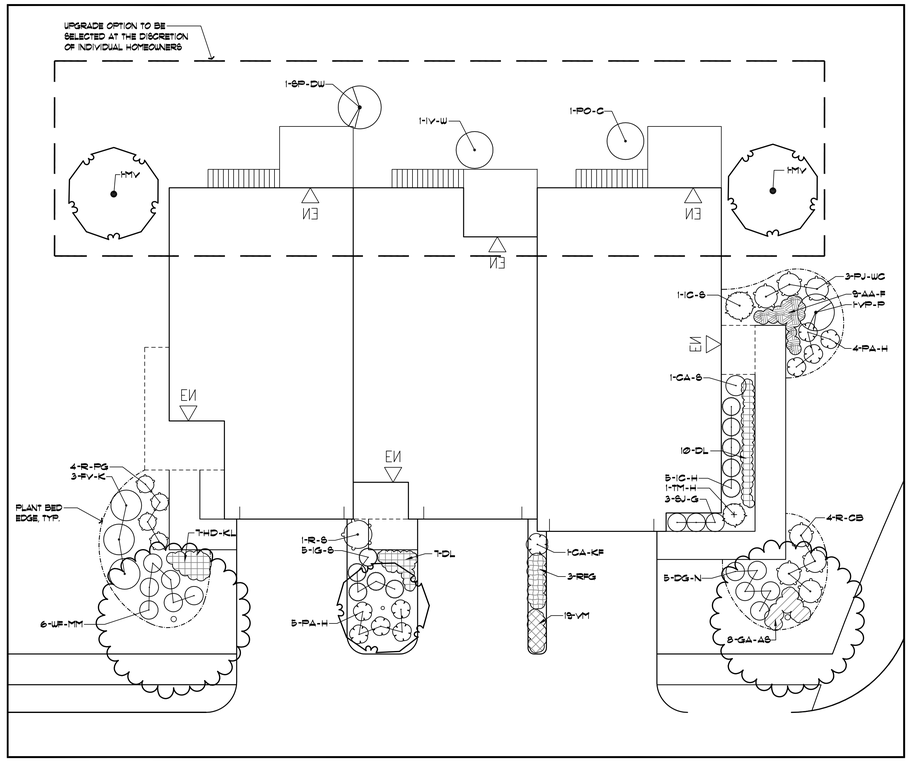

PLANT SCHEDULE TOWNHOUSE TYPE C

SHRUBS	QTY	BOTANICAL NAME	COMMON NAME	CONT	CAL	SIZE
CA-KF	1	Calamagrostis x acutiflora `Karl Foerster`	Feather Reed Grass	3 GAL		
CA-S	1	Clethra alnifolia `Sixteen Candles`	Summersweet Clethra	B & B		18-24" H
DG-N	5	Deutzia gracilis `Nikko`	Slender Deutzia	B & B		15-18" H
FV-K	3	Forsythia viridissima koreana `Kumson`	Kumson Korean Forsythia	B & B		3-3.5` H
IC-H	5	Ilex crenata `Hellen`	Heller Japanese Holly	B & B		18-24" H
IC-S	1	Ilex crenata `Steeds`	Steeds Japanese Holly	B & B		5-6` HT.
IG-S	5	Ilex glabra `Shamrock`	Shamrock Inkberry	B & B		2-2.5` H
PA-H	9	Pennisetum alopecuroides `Hameln`	Hameln Dwarf Fountain Grass	2 GAL		
PJ-WC	3	Pieris japonica `White Cascade`	White Cascade Andromeda	B & B		2-2.5` H
R-CB	4	Rhododendron x `Cunningham's Blush`	Cunningham's Blush Rhododendron	B & B		2-2.5` H
R-PG	4	Rhododendron `Purple Gem`	Purple Gem Rhododendron	B & B		18-24" H
R-S	1	Rhododendron `Scintillation`	Scintillation Rhododendron	B & B		3-3.5` H
SJ-G	3	Spiraea japonica `Goldflame`	Goldflame Spirea	B & B		18-24" H
TM-H	1	Taxus x media `Hicksii`	Hicks Yew	B & B		3-3.5` H
VP-P	1	Viburnum plicatum `Popcorn`	Popcorn Viburnum	B & B		5-6` HT.
WF-MM	6	Weigela florida `My Monet`	My Monet Weigela	B & B		15-18" H

GROUND COVERS	QTY	BOTANICAL NAME	COMMON NAME	CONT
AA-F	9	Astilbe x arendsii `Fanal`	Fanal Astilbe	1 gal@ 24" oc
DL	17	Daylily	Daylily	1 gal@ 24" oc
GA-AS	8	Gaillardia aristata `Arizona Sun`	Arizona Sun Blanket Flower	1 gal@ 24" oc
HD-KL	7	Heuchera dolce `Key Lime`	Key Lime Coral Bells	1 gal@ 24" oc
RFG	3	Rudbeckia fulgida `Goldsturm`	Goldsturm Black-eyed Susan	2 gal@ 42" oc
VM	19	Vinca minor	Common Periwinkle	flat @ 12" oc

PLANT SCHEDULE HOMEOWNER UPGRADE OPTION

FLOWERING TREES	QTY	BOTANICAL NAME	COMMON NAME	CONT	SIZE
MV	2	Magnolia virginiana	Sweet Bay	B & B	8-10` HT.

SHRUBS	QTY	BOTANICAL NAME	COMMON NAME	CONT	SIZE
IV-W	1	Ilex verticillata `Winter King`	Winterberry	B & B	2-2.5` HT.
PO-C	1	Physocarpus opulifolius `Coppertina`	Coppertina Ninebark	B & B	3-3.5` HT.
SP-DW	1	Syringa x prestoniae `Donald Wyman`	Donald Wyman Lilac	B & B	6-8` HT.

Townhouse Type C Typical Planting Plan
Scale: 1" = 10'-0"

0 10 20 30 feet
SCALE: 1" = 10'
Base plan information provided electronically by Vanasse Hangen Brustlin, Inc.

Hawk Design, Inc.
Landscape Architecture
Land Planning
Sagamore, MA
508-833-8800
Info@hawkdesigninc.com
www.hawkdesigninc.com

HAWK DESIGN, INC. 2012
THIS DRAWING AND ALL INFORMATION CONTAINED HEREON IS PROPRIETARY INFORMATION OF HAWK DESIGN, INC. AND MAY NOT BE COPIED OR REPRODUCED, EITHER IN WHOLE OR IN PART, BY ANY METHOD, WITHOUT WRITTEN PERMISSION OF HAWK DESIGN, INC.

Date: 11/13/12

Revisions:

Num.	Date	Description
1.	1/29/13	Signage revision, add Option B Townhouse 1,2 & 3, add typical townhouse streetscape
2.	2/26/13	Per Planning Board and peer review comments
3.	4/1/13	Revise per site plan revisions
4.	4/5/13	Per Planning Board and peer review comments
5.	4/16/13	Per site plan revisions, Planning Board & peer review comments

Danforth Green, LLC.
Framingham, Massachusetts

Drawn By: BNL | Checked By: TM

Typical Townhouse Planting Plans

Scale: 1" = 10'-0"

Sheet: L2.4

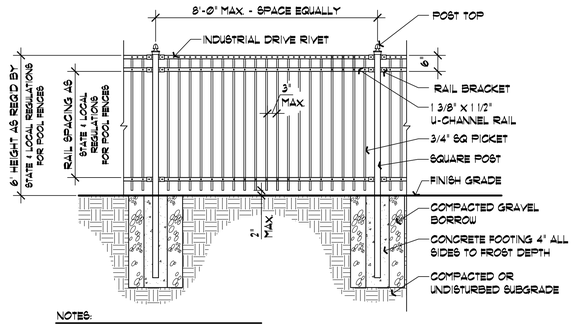

NOTES:
1. PICKETS - SPACING TO BE IN ACCORDANCE W/ STATE & LOCAL REGULATIONS FOR POOL FENCES
2. POOL FENCE HEIGHT TO BE IN ACCORDANCE W/ STATE & LOCAL REGULATIONS FOR POOL FENCES
3. FENCE CONTRACTOR SHALL VERIFY & INSTALL FENCE IN ACCORDANCE W/ ALL STATE & LOCAL REGULATIONS FOR POOL FENCES
4. FOOTING WIDTH TO BE (4)X POST WIDTH.
5. COLOR- BLACK

Pool Fence Detail
Scale: 1/2" = 1'-0"

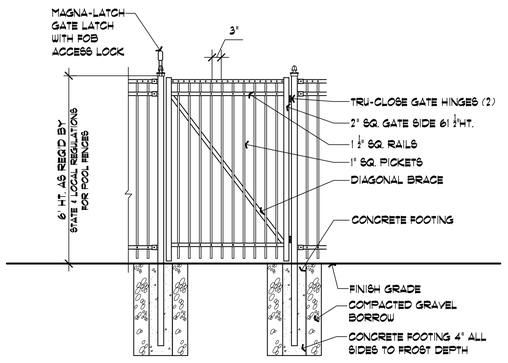

NOTES
1. PICKETS - SPACING TO BE IN ACCORDANCE W/ STATE & LOCAL REGULATIONS FOR POOL GATES
2. POOL GATE HEIGHT TO BE IN ACCORDANCE W/ STATE & LOCAL REGULATIONS FOR POOL FENCES
3. CONTRACTOR SHALL VERIFY & INSTALL GATE IN ACCORDANCE W/ ALL STATE & LOCAL REGULATIONS FOR POOL GATES
4. COLOR- BLACK

Pool Fence Gate Detail
Scale: 1/2" = 1'-0"

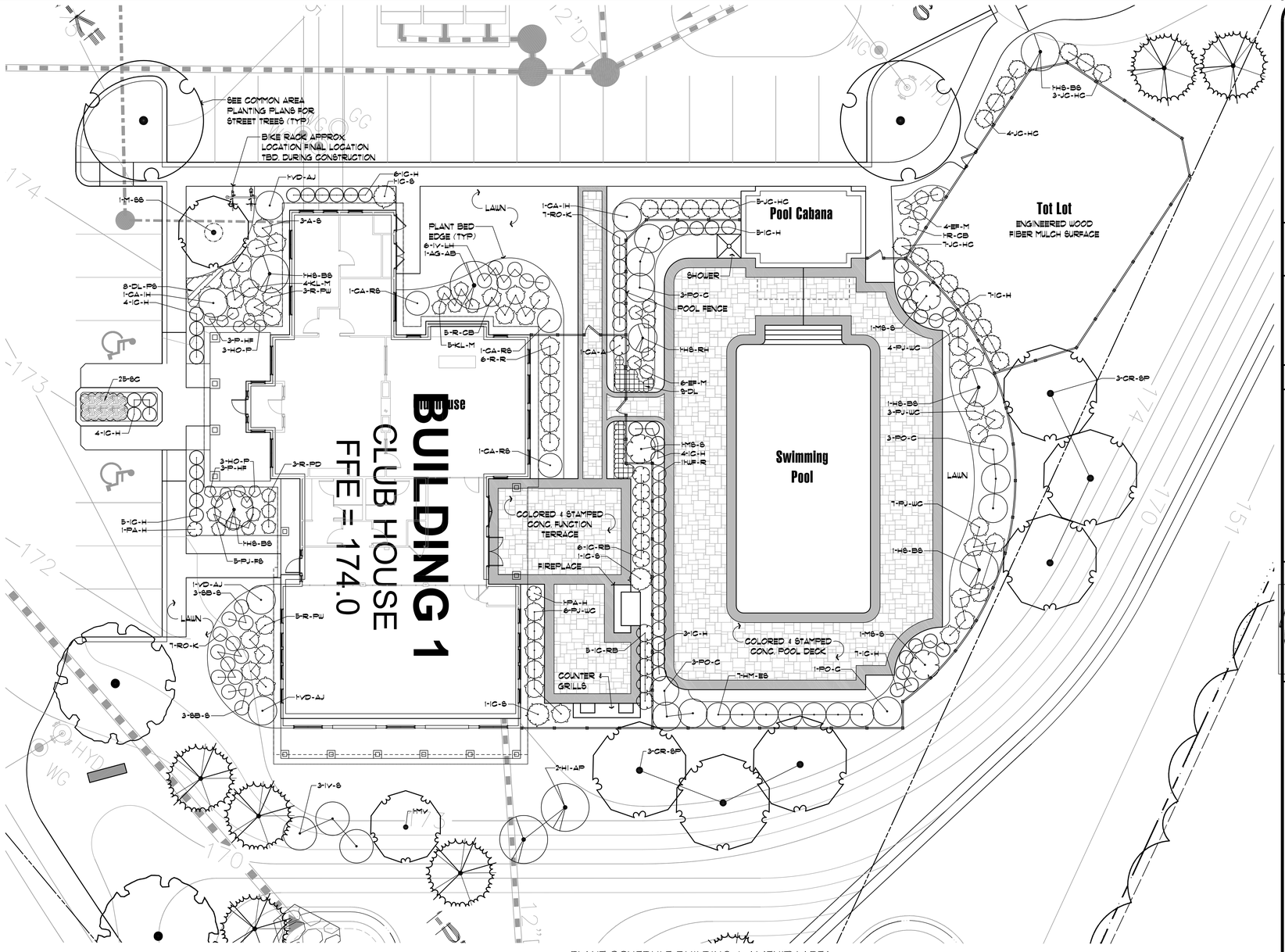

PLANT SCHEDULE BUILDING 1 AMENITY AREA

FLOWERING TREES	QTY	BOTANICAL NAME	COMMON NAME	CONT	CAL	SIZE
CK-SP	6	Cornus x rutgersensis `Stellar Pink`	Pink Flowering Stellar Dogwood	B & B	3-3.5" CAL.	
M-SS	1	Malus `Spring Snow`	Spring Snow Crabapple	B & B	3-3.5" CAL.	
MV	1	Magnolia virginiana	Sweet Bay	B & B		8-10` HT.
SHRUBS	**QTY**	**BOTANICAL NAME**	**COMMON NAME**	**CONT**	**CAL**	**SIZE**
A-S	3	Azalea x `Silversword`	Silversword Azalea	B & B		2-2.5` HT.
AG-AB	1	Amelanchier grandiflora `Autumn Brilliance`	Autumn Brilliance Serviceberry	B & B		8-10` HT.
CA-A	1	Calamagrostis x acutiflora `Avalanche`	Feather Reed Grass	3 GAL		
CA-IH	2	Cornus alba `Ivory Halo`	Variegated Redtwig Dogwood	B & B		3-3.5` HT.
CA-RS	3	Clethra alnifolia `Ruby Spice`	Ruby Spice Clethra	B & B		3-3.5` HT.
EF-M	10	Euonymus fortunei `Moonshadow`	Moonshadow Euonymus	B & B		18-24" HT.
HI-AP	2	Hamamelis x intermedia `Arnold Promise`	Arnold Promise Hybrid Witch Hazel	B & B		8-10` HT.
HM-ES	7	Hydrangea macrophylla `Endless Summer`	Endless Summer Hydrangea	B & B		3-3.5` HT.
HO-P	6	Hosta x `Patriot`	Patriot Hosta	2 GAL		
HS-BS	5	Hibiscus syriacus `Blue Satin`	Blue Satin Rose-of-Sharon	B & B		5-6` HT.
HS-RH	1	Hibiscus syriacus `Red Heart`	Red Heart Rose of Sharon	B & B		4-5` HT.
IC-H	45	Ilex crenata `Hellen`	Heller Japanese Holly	B & B		18-24" HT.
IC-RB	11	Imperata cylindrica `Red Baron`	Japanese Blood Grass	3 GAL		
IC-S	3	Ilex crenata `Steeds`	Steeds Japanese Holly	B & B		5-6` HT.
IV-LH	6	Itea virginica `Little Henry`	Little Henry Sweetspire	B & B		15-18" HT.
IV-S	3	Ilex verticillata `Sparkleberry`	Winterberry	B & B		4-5` HT.
JC-HC	21	Juniperus chinensis `Hetzii Columnans`	Hetzi Column Juniper	B & B		6-7` HT.
KL-M	9	Kalmia latifolia `Minuet`	Minuet Mountain Laurel	B & B		2-2.5` HT.
MS-S	3	Miscanthus sinensis `Strictus`	Porcupine Grass	5 GAL		
PA-M	2	Pennisetum alopecuroides `Hameln`	Hameln Dwarf Fountain Grass	2 GAL		
PJ-FS	5	Pieris japonica `Flaming Silver`	Flaming Silver Andromeda	B & B		2-2.5` HT.
PJ-WC	20	Pieris japonica `White Cascade`	White Cascade Andromeda	B & B		2-2.5` HT.
PO-C	10	Physocarpus opulifolius `Coppertina`	Coppertina Ninebark	B & B		3-3.5` HT.
R-CB	6	Rhododendron x `Cunningham`s Blush`	Cunningham`s Blush Rhododendron	B & B		2-2.5` HT.
R-PD	3	Rhododendron `Pohjola`s Daughter`	Pohjola`s Daughter Rhododendron	B & B		18-24" HT.
R-PW	8	Rhododendron `Percy Wiseman`	Percy Wiseman Rhododendron	B & B		2-2.5` HT.
R-R	6	Rhododendron `Ramapo`	Ramapo Rhododendron	B & B		2-2.5` HT.
RO-K	14	Rosa x `Knockout`	Knockout Rose	3 GAL		
SB-S	6	Spiraea x bumalda `Shirobana`	Shirobana Spirea	B & B		2-2.5` HT.
VD-AJ	3	Viburnum dentatum `Autumn Jazz`	Autumn Jazz Viburnum	B & B		5-6` HT.
WF-R	11	Weigela florida `Rumba`	Rumba Weigela	B & B		2-2.5` HT.
ANNUALS/PERENNIALS	**QTY**	**BOTANICAL NAME**	**COMMON NAME**	**CONT**	**CAL**	**SIZE**
P-HF	6	Hosta x `Francee`	Hosta	2 GAL		
GROUND COVERS	**QTY**	**BOTANICAL NAME**	**COMMON NAME**	**CONT**		
DL	17	Daylily	Daylily	1 gal@ 24" oc		
DL-PS	8	Hemerocallis x `Purple Stella de Oro`	Purple Stella de Oro Daylily	1 gal@ 24" oc		
SC	25	Seasonal Color	Seasonal Color	1 gal@ 18" oc		

0 10 20 30 feet
SCALE: 1" = 10'

Base plan information provided electronically by Vanasse Hangen Brustlin, Inc.

Hawk Design, Inc.
Landscape Architecture
Land Planning
Sagamore, MA
508-833-8800
Info@hawkdesigninc.com
www.hawkdesigninc.com

HAWK DESIGN, INC. 2012
THIS DRAWING AND ALL INFORMATION CONTAINED HEREON IS PROPRIETARY INFORMATION OF HAWK DESIGN, INC. AND MAY NOT BE COPIED OR REPRODUCED, EITHER IN WHOLE OR IN PART, BY ANY METHOD, WITHOUT WRITTEN PERMISSION OF HAWK DESIGN, INC.

Date: 11/13/12

Revisions:

Num.	Date	Description
1.	1/29/13	Signage revision, add Option B Townhouse 1,2 & 3, add typical townhouse streetscape
2.	2/26/13	Per Planning Board and peer review comments
3.	4/1/13	Revise per site plan revisions
4.	4/5/13	Per Planning Board and peer review comments
5.	4/16/13	Per site plan revisions, Planning Board & peer review comments

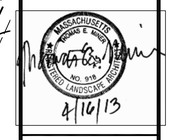

Danforth Green, LLC.
Framingham, Massachusetts

Drawn By: BNL | Checked By: TM

Amenity Area Landscape Plan

Scale: 1" = 10'-0"

Sheet: **L3.1**

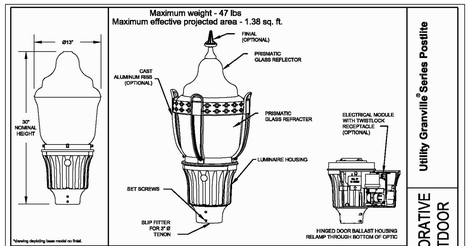

Utility Granville Series Postlite

DECORATIVE OUTDOOR

HOLOPHANE
An ◆Royal Philips Electronics Company
© 2006 Holophane

GVU 15AHP 12 N 3 N F G

ORDERING INFORMATION:

HOUSING:
GVU = STANDARD
GVL = LEAF

BALLAST TYPE:
(MOGUL BASE)
050HP = 50W HPS
070HP = 70W HPS
100HP = 100W HPS
(not available with 347 V)
150MH = 150W M59 HPS
150MH = 150W M4 HPS
(not available with 480V)
175SM = 175W MH
175PM = 175W PM

BALLAST TYPE:
(MEDIUM BASE)
050HP = 50W HPS
(not available with 347 V)
070HP = 70W HPS
100HP = 100W HPS
150HP = 150W M59 HPS
070MH = 70W MH
(not available with 480V)
100MH = 100W MH
(not available with 480V)
150MH = 150W MH
(not available with 480V)
**175MH = 175W MH

VOLTAGE
06 = 208 VOLT (CLVL)
(not available with 150MH, 150HPS)
12 = 120 VOLT (CLVL)
20 = 208 VOLT
24 = 240 VOLT
27 = 277 VOLT (M & H ONLY)
34 = 347 VOLT (M & H ONLY)
48 = 480 VOLT (CLVL)
(not available with 150MH, 150HPS)
4E = 480 VOLT
MA = MULTITAP (factory 120V)
(120, 208, 240, 277 VOLT)
MB = MULTITAP (factory 208V)
(208, 240, 277 VOLT)
MC = MULTITAP (factory 240V)
(208, 240, 277 VOLT)
MD = MULTITAP (factory 277V)
(120, 208, 240, 277 VOLT)

HOUSING COLOR
A = AS SPECIFIED
B = BLACK
D = DARK GREEN
TIGER DRYLAC RAL6005
E = BROWN GREEN
TIGER DRYLAC RAL6008
F = DARK GREEN
TIGER DRYLAC RAL6009
H = DARK OXFORD
TIGER DRYLAC RAL8012
N = GREEN
Z = BRONZE

OPTICS
3 = IES TYPE III DISTRIBUTION
4 = IES TYPE IV DISTRIBUTION
5 = IES TYPE V DISTRIBUTION
6 = IES TYPE 6 DISTRIBUTION
LUNAR
7 = IES TYPE III DISTRIBUTION LUNAR
8 = IES TYPE V DISTRIBUTION LUNAR

TRIM
N = NO TRIM
R = RIBS & BAND HINGED-TOP
S = SYNAGUIDE STYLE WITH COVER

FINIAL
C = CLEAR
E = EAGLE
F = FLOWER
N = NONE
P = PAWN
R = CROWN
S = STAG HORN
T = ROM CROWN

COLOR
A = AS SPECIFIED
B = BLACK
D = DARK GREEN
TIGER DRYLAC RAL6005
E = BROWN GREEN
TIGER DRYLAC RAL6008
F = DARK GREEN
TIGER DRYLAC RAL6009
G = GOLD
H = DARK OXFORD
TIGER DRYLAC RAL8012
N = GREEN
U = NO TRIM AND CLEAR OR NO FINIAL
Z = BRONZE

*NOT AVAILABLE FOR SHIPMENT IN US AFTER 12/31/08 DUE TO ESSA 2007 LEGISLATION.

OPTIONS
H = NEMA TWISTLOCK PHOTOCONTROL RECEPTACLE ONLY
P = PROTECTED STARTER FOR HPS UNITS ONLY
T = NEMA TWISTLOCK AND PROTECTED STARTER FOR HPS UNITS ONLY.
HOUSE = TAN HOUSE COVER (INSERT TRIM FINISH, FROM STEP 6 FOR A, ALSO MUST HAVE FINIAL)
COVER = TAN HOUSE LID COVER (INSERT TRIM FINISH, FROM STEP 6 FOR A, ALSO MUST HAVE FINIAL)
NC = NEMA LATCH
PS7 = DTL TWISTLOCK PHOTOCONTROL, 100-277 VOLT
PH8 = DTL TWISTLOCK PHOTOCONTROL, 480 VOLT
RBC = RACKTITE CAP
L15 = 15 FEET OF PREWIRED LEADS
L20 = 20 FEET OF PREWIRED LEADS
L25 = 25 FEET OF PREWIRED LEADS
L30 = 30 FEET OF PREWIRED LEADS
L5 = 5 FEET OF PREWIRED LEADS
L10 = 10 FEET OF PREWIRED LEADS

ACCESSORIES
LAMP = SHIP APPROPRIATE LAMP AS LINE ITEM. SEE LAMP SHEET
GVBANNCK = DECORATIVE BAND (INSERT TRIM FINISH FROM K)
GVPHOUSE90 = HOUSE SIDE SHIELD 90 DEGREE (NOT AVAILABLE IN 6,7 OR 8 OPTIC)
GVPHOUSE12 = HOUSE SIDE SHIELD 120 DEGREE (NOT AVAILABLE IN 6,7 OR 8 OPTIC)
GVPHOUSE18 = HOUSE SIDE SHIELD 180 DEGREE (NOT AVAILABLE IN 6,7 OR 8 OPTIC)
IG-S = PLUG-IN REPLACEMENT STARTER FOR 50-100/150MH UNITS
IG-P = PLUG-IN REPLACEMENT PROTECTED STARTER FOR HPS UNITS
IG-T = PLUG-IN REPLACEMENT STARTER FOR 70/100/150MH UNITS

ORDER #:
TYPE:
DRAWN: JCH
DATE: 1/16/09
SHEET: L-LIGHT

Holophane GranVille Post Light

STATISTICS						
Description	Symbol	Avg	Max	Min	Max/Min	Avg/Min
Building 1, 2 & 3 Parking	+	0,3 fc	0,5 fc	0,1 fc	5,0:1	3,0:1
Building 4 & 5 Parking	+	0,2 fc	0,7 fc	0,0 fc	N / A	N / A
Building 6 & 7 parking	+	0,2 fc	0,6 fc	0,0 fc	N / A	N / A
Building 8, 9 & 10 Parking	+	0,2 fc	0,5 fc	0,0 fc	N / A	N / A
Building 11 Parking	+	0,2 fc	0,4 fc	0,1 fc	4,0:1	2,0:1
Oxbow Road	+	0,3 fc	0,7 fc	0,0 fc	N / A	N / A
Riverpath Drive	+	0,3 fc	0,9 fc	0,0 fc	N / A	N / A

LUMINAIRE SCHEDULE

Symbol	Label	Qty	Catalog Number	Description	Lamp	Lumens	LLF	Watts
○	E	82	GV70DMH00XX3N	Holophane Granville type III distribution mounted on 12' pole	70W CLEAR MH	5000	0.75	95
⬡	F	13	GV70DMH00XX5NX X	Holophane Granville type V distribution mounted on 12' pole	70W CLEAR MH	5000	0.75	95

0 80 160 240 feet
SCALE: 1" = 80'
Base plan information provided electronically by Vanasse Hangen Brustlin, Inc.

Hawk Design, Inc.
Landscape Architecture
Land Planning
Sagamore, MA
508-833-8800
Info@hawkdesigninc.com
www.hawkdesigninc.com

HAWK DESIGN, INC. 2012
THIS DRAWING AND ALL INFORMATION CONTAINED HEREON IS PROPRIETARY INFORMATION OF HAWK DESIGN, INC. AND MAY NOT BE COPIED OR REPRODUCED, EITHER IN WHOLE OR IN PART, BY ANY METHOD, WITHOUT WRITTEN PERMISSION OF HAWK DESIGN, INC.

Date: 11/13/12

Revisions:

Num.	Date	Description
1.	1/29/13	Signage revision, add Option B Townhouse 1,2 & 3, add typical townhouse streetscape
2.	2/26/13	Per Planning Board and peer review comments
3.	4/1/13	Revise per site plan revisions
4.	4/5/13	Per Planning Board and peer review comments
5.	4/16/13	Per site plan revisions. Planning Board & peer review comments

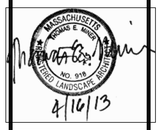

Danforth Green, LLC.
Framingham, Massachusetts

Drawn By: BNL | Checked By: TM

Site Lighting Plan

Scale: 1" = 80'-0"

Sheet: **L4.1**

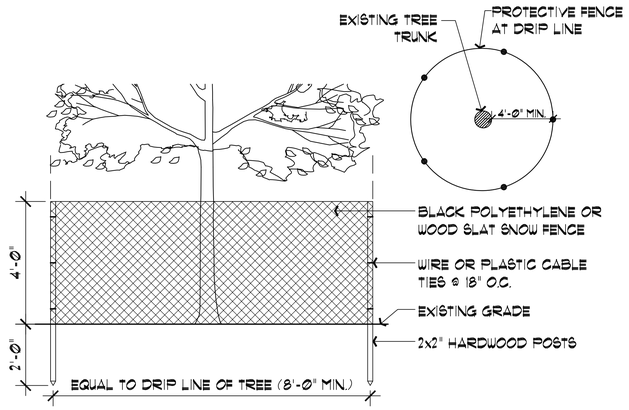

NOTES:

1. PROTECTIVE FENCE TO REMAIN UNTIL CONSTRUCTION IS COMPLETE.
2. NO TREE SHALL BE REMOVED UNLESS SPECIFICALLY TAGGED FOR REMOVAL BY THE LANDSCAPE ARCHITECT.
3. CONTRACTOR SHALL TAKE CARE NOT TO DAMAGE TREES THAT ARE TO REMAIN.
4. DO NOT NAIL BOARDS OR FENCING TO TREES DURING CONSTRUCTION.
5. ANY EXCAVATING WITHIN DRIPLINE MUST BE APPROVED BY LANDSCAPE ARCHITECT AND MUST BE HAND-DUG. CONTRACTOR SHALL NOT CUT ANY ROOTS AND/OR BRANCHES UNLESS APPROVED BY LANDSCAPE ARCHITECT.
6. ROOTS EXPOSED AND/OR DAMAGED DURING GRADING & CONSTRUCTION OPERATIONS SHALL BE CUT OFF CLEANLY INSIDE THE EXPOSED OR DAMAGED AREA AND TOPSOIL BE PLACED OVER THE ROOTS IMMEDIATELY. FEEDER ROOTS SHALL NOT BE CUT IN AN AREA INSIDE DRIP LINE OF THE TREE BRANCHES.
7. ROOTS GREATER THAN 1" DIAMETER SHALL NOT BE CUT UNLESS OTHERWISE APPROVED BY THE LANDSCAPE ARCHITECT.
8. STOCKPILED MATERIALS OR UNNECESSARY VEHICULAR TRAFFIC SHALL NOT BE ALLOWED OVER ANY TREE ROOT SYSTEM.
9. INSPECT FENCE ON WEEKLY BASIS AND REPAIR DAMAGE IMMEDIATELY.

1 Tree Protection
Not to Scale

SCHEDULE OF TOPSOILS & ADDITIVES

LOCATION	DEPTH	DESCRIPTION
GENERAL PLANTING BEDS	12"	1/3 PEAT - MANURE BLEND 1/3 HIGH ORGANIC LOAM 1/3 EXISTING SOIL
FLOWER BEDS	12"	SCREENED LOAM 1/3 PEAT - MANURE BLEND LIME - PELATIZED OR GROUND (50 LB. PER 100 SF.) GROUND BONE MEAL (5 LB. PER 100 SF.) 10-10-10 INORGANIC FERTILIZER (50 LB. PER 5000 SF.)
LAWNS - SOD & SEED	6"	6" SCREENED LOAM
PITS/TREE WELLS 'STANDARD MIX' FOR BACKFILL	12"	1/3 PEAT - MANURE BLEND SOIL MIX 'A' - 1/3 HIGH ORGANIC LOAM 1/3 EXISTING SOIL

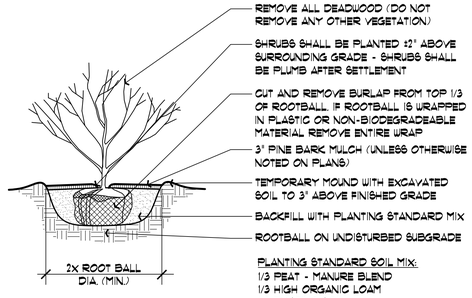

2 Shrub Detail
Not to Scale

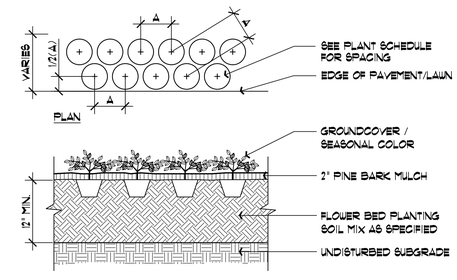

3 Perennial & Seasonal Color Detail
Not to Scale

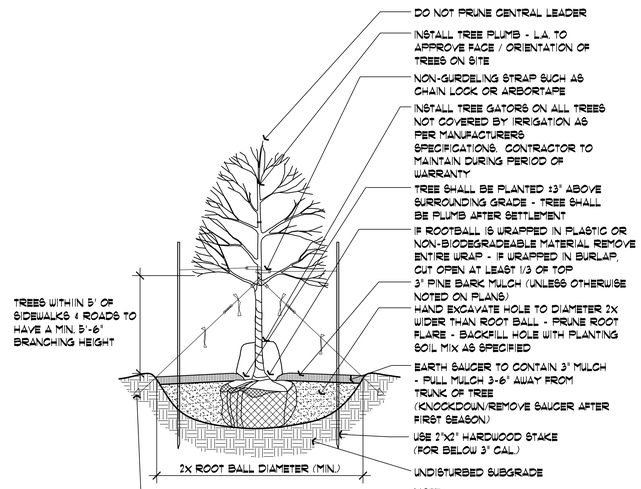

4 Deciduous Tree Detail
Not to Scale

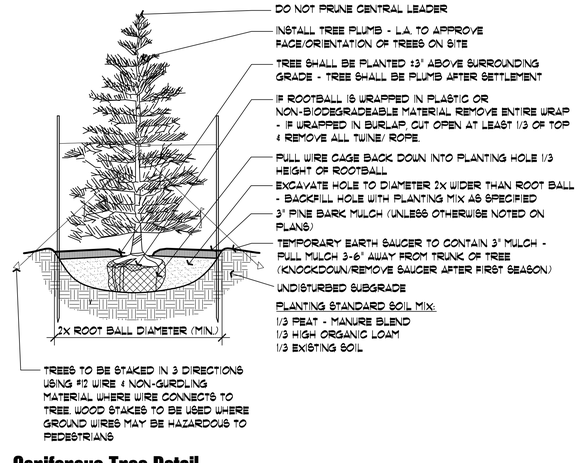

5 Coniferous Tree Detail
Not to Scale

Hawk Design, Inc.
Landscape Architecture
Land Planning
Sagamore, MA
508-833-8800
Info@hawkdesigninc.com
www.hawkdesigninc.com

HAWK DESIGN, INC. 2012
THIS DRAWING AND ALL INFORMATION CONTAINED HEREON IS PROPRIETARY INFORMATION OF HAWK DESIGN, INC. AND MAY NOT BE COPIED OR REPRODUCED, EITHER IN WHOLE OR IN PART, BY ANY METHOD, WITHOUT WRITTEN PERMISSION OF HAWK DESIGN, INC.

Date: 11/13/12

Revisions:

Num.	Date	Description
1.	1/29/13	Signage revision, add Option B Townhouse 1,2 & 3, add typical townhouse streetscape
2.	2/26/13	Per Planning Board and peer review comments
3.	4/1/13	Revise per site plan revisions
4.	4/5/13	Per Planning Board and peer review comments
5.	4/16/13	Per site plan revisions, Planning Board & peer review comments

Danforth Green, LLC.
Framingham, Massachusetts

Drawn By: BNL | Checked By: TM

Planting Details

Scale: As Noted

Sheet: **L5.1**

1.0 GENERAL LANDSCAPE NOTES

1.1) CONTRACTOR REQUIREMENTS:
A) ALL WORK SHALL COMPLY WITH APPLICABLE CODES AND REGULATIONS, FROM ALL FEDERAL, STATE AND LOCAL AUTHORITIES.

B) THE CONTRACTOR SHALL ARRANGE FOR AND OBTAIN ALL PERMITS AND LICENSES REQUIRED FOR THE COMPLETE WORK SPECIFIED HEREIN AND SHOWN ON ALL THE DRAWINGS. THE CONTRACTOR SHALL PAY FOR ANY FEES NOT WAIVED.

1.2) UTILITIES:
A) LANDSCAPE CONTRACTOR IS REQUIRED TO CONTACT THE RELEVANT UTILITY COMPANIES PRIOR TO DOING ANY EXCAVATION ON THE SITE. IF ANY WORK IS TO BE DONE AROUND UNDERGROUND UTILITIES, THE APPROPRIATE AUTHORITY OF THAT UTILITY MUST BE NOTIFIED OF THE IMPENDING WORK.

B) UTILITIES SHALL BE LOCATED AND MARKED PRIOR TO ANY INSTALLATION. ADJUSTMENTS MAY BE NECESSARY IN THE FIELD TO ACCOMMODATE UTILITY LOCATIONS. REPORT ANY CONFLICTS TO THE LANDSCAPE ARCHITECT PRIOR TO INSTALLATION.

C) THE LANDSCAPE CONTRACTOR SHALL BE RESPONSIBLE FOR ANY DAMAGES DONE TO EXISTING UTILITIES. THE CONTRACTOR SHALL BE RESPONSIBLE FOR THE COST OF SATISFACTORY REPAIR OF ALL DAMAGE IN KIND RESULTING FROM THEIR FAILURE TO COMPLY.

1.3) PROTECTION OF EXISTING WORK: IT SHALL BE THE CONTRACTOR'S RESPONSIBILITY TO PERFORM ALL WORK IN A MANNER THAT PROTECTS WORK COMPLETED BY OTHERS, SUCH AS CURBS, UTILITIES, STORM DRAINAGE, FENCES, DRIVEWAY APRONS, DRIVES, VEGETATION, ETC. THE CONTRACTOR SHALL BE RESPONSIBLE FOR THE COST OF SATISFACTORY REPAIR OF ALL DAMAGE IN KIND RESULTING FROM THEIR FAILURE TO COMPLY.

1.4) QUANTITIES: A COMPLETE LIST OF PLANTS INCLUDING A SCHEDULE OF QUANTITIES, SIZES, TYPES, AND NAMES IS INCLUDED IN THIS SET OF DRAWINGS. IN THE EVENT OF DISCREPANCIES BETWEEN QUANTITIES OF PLANT IN THE PLANT LIST AND THE QUANTITIES SHOWN ON THE DRAWINGS, THE PLAN SHALL GOVERN. THE LANDSCAPE CONTRACTOR SHALL NOTIFY THE LANDSCAPE ARCHITECT OF UNLABELED PLANTS IN PLAN FOR CLARIFICATION. THE LANDSCAPE ARCHITECT SHALL BE ALERTED BY THE CONTRACTOR OF ANY DISCREPANCIES PRIOR TO FINAL BID NEGOTIATION.

1.5) APPLICABLE PLANT MATERIALS STANDARDS: ALL PLANT MATERIALS ARE TO COMPLY WITH THE LATEST EDITION OF THE AMERICAN STANDARD FOR NURSERY STOCK AS PUBLISHED BY THE AMERICAN ASSOCIATION OF NURSERYMEN. PLANTING METHODS WILL BE IN ACCORDANCE WITH SITE-SPECIFIC REQUIREMENTS.

1.6) PLANT HARDINESS: ALL TREES AND SHRUBS SHALL BE NURSERY GROWN WITHIN A USDA PLANT HARDINESS ZONE, WHICH IS THE SAME AS, OR COLDER THAN, THE ZONE IN WHICH THE PROJECT IS LOCATED.

1.7) PLANTING SEASONS: PLANTING SHALL ONLY OCCUR DURING SPECIFIED SEASONS. SPRING SEASON SHALL BE FROM MARCH 1 TO JUNE 15. FALL PLANTING SEASON SHALL BE FROM SEPTEMBER 15 THROUGH NOVEMBER 15. NO PLANTING SHALL OCCUR WHEN THE GROUND IS FROZEN.

1.8) PLANT SUBSTITUTIONS: NO SUBSTITUTIONS OF PRODUCTS, PLANT TYPES OR SIZES SHALL BE MADE WITHOUT THE WRITTEN APPROVAL OF THE LANDSCAPE ARCHITECT. REQUESTS FOR SUBSTITUTION SHALL BE IN WRITING, AND SHALL STATE THE REASON FOR THE SUBSTITUTION REQUEST, THE SUGGESTED ALTERNATIVE AND THE CHANGES IN COST. REQUESTS FOR SUBSTITUTION IN PLANT MATERIALS SHALL STATE THE NAMES OF NURSERIES THAT HAVE BEEN UNABLE TO SUPPLY THE ORIGINALLY SPECIFIED MATERIAL.

1.9) THE LANDSCAPE ARCHITECT SHALL INSPECT AND TAG ALL TREES.. OTHER PLANT MATERIALS SHALL BE INSPECTED UPON SITE DELIVERY AND DURING INSTALLATION TO INSURE SPECIFICATIONS AND PROCEDURES ARE ADHERED TO.

1.10) MINIMUM SIZES: ALL PLANTS 3' OR GREATER IN HEIGHT OR SPREAD SHALL BE BALLED AND BURLAPPED. SIZES SPECIFIED IN THE PLANT LIST ARE MINIMUMS ON WHICH THE PLANTS ARE TO BE JUDGED.

1.11) DEAD PLANTS: DEAD PLANTS ARE TO BE REMOVED FROM THE SITE IMMEDIATELY, AND REPLACED WITH THE SAME PLANT & SIZE REGARDLESS OF SEASON, WEEKLY FROM THE JOB BY THE CONTRACTOR. THE CONTRACTOR SHALL MAINTAIN AN UPDATED COMPREHENSIVE LIST OF ALL DEAD MATERIALS REMOVED AND PRESENT A COPY OF THE LIST TO THE OWNER AND LANDSCAPE ARCHITECT AT THE END OF EVERY MONTH DURING THE CONTRACT PERIOD.

1.12) PLANT MATERIAL REMOVAL: NO EXISTING TREES SHALL BE REMOVED WITHOUT THE WRITTEN AUTHORIZATION FROM THE LANDSCAPE ARCHITECT EXCEPT WHERE NOTED ON THE PLANS. CONTRACTORS WHO REMOVE EXISTING TREES WITHOUT WRITTEN APPROVAL WILL BE REQUIRED TO MAKE REMEDIES DETERMINED BY THE GOVERNING URBAN FORESTER OR EQUIVALENT AUTHORITY. NO GRUBBING SHALL OCCUR WITHIN EXISTING TREE AREAS UNLESS SPECIFICALLY NOTED ON THE PLANS.

1.13) ALL DISTURBED AREAS NOT TO RECEIVE PLANT MATERIALS ARE TO BE LOAMED AND SEEDED AND BLENDED INTO EXISTING GRADE AND CONDITIONS. SEE SECTION 4.0.

1.14) LEDGE BOULDERS: IF DURING SITE EXCAVATION, LEDGE BOULDERS ARE AVAILABLE, THESE ARE TO BE STOCKPILED FOR USE IN EARTH BERMS IF APPLICABLE, WITH HAWK DESIGN, INC. PRIOR TO INSTALLATION. THIS ITEM WILL ONLY APPLY IF SO SPECIFIED ON DRAWINGS. BOULDERS SIZES TO BE STOCKPILED WILL RANGE FROM TWO TO FIVE FEET IN DIAMETER. SEE APPROPRIATE DETAIL FOR INSTALLATION COORDINATION.

1.15) SLEEVES: LANDSCAPE OR SITE CONTRACTOR SHALL PLACE INDIVIDUAL SLEEVES FOR LIGHTING AND IRRIGATION UNDER ANY PROPOSED WALKWAY OR VEHICULAR ROADWAY PRIOR TO INSTALLATION. COORDINATE SLEEVE LOCATIONS WITH IRRIGATION AND LIGHTING CONTRACTORS PRIOR TO INSTALLATION.

1.16) DO NOT CLOSE OR OBSTRUCT ANY STREET, SIDEWALK, ALLEY OR PASSAGEWAY WITHOUT PRIOR NOTIFICATION AND PERMISSION. CONDUCT OPERATIONS AS TO INTERFERE AS LITTLE AS POSSIBLE WITH THE USE ORDINARILY MADE OF ROADS, DRIVEWAYS, ALLEYS, SIDEWALKS OR OTHER FACILITIES NEAR ENOUGH TO THE WORK TO BE EFFECTED THEREBY.

2.0 PLANTING MATERIALS

2.1 PLANTING MATERIAL ITEMS IN SECTION 2.0 ARE TO BE INCORPORATED DURING PLANT INSTALLATION UNLESS OTHERWISE DEEMED UNNECESSARY IN ACCORDANCE WITH SOIL TEST RECOMMENDATIONS. SEE SECTION 3.1.

MULCH - MULCH WILL BE DOUBLE-SHREDDED PINE BARK MULCH.
- TREES AND SHRUBS SHALL RECEIVE AN EVEN 3" MULCH LAYER.
- GROUNDCOVERS, PERENNIALS AND ANNUALS SHALL RECEIVE AN EVEN 2" MULCH LAYER.

MANURE- TO BE WELL ROTTED, ODORLESS, UNLEACHED COW MANURE, CONTAINING NOT MORE THAN 15% BEDDED MATERIALS SUCH AS STRAW, WOOD CHIPS OR SHAVINGS, AGED NOT LESS THAN TWO YEARS OLD.

FERTILIZER- ORGANIC FERTILIZER TO BE APPLIED TO ALL VEGETATION PER THE RECOMMENDATIONS OF THE SOIL TESTING.

TOPSOIL- ACCEPTABLE TOPSOIL SHALL BE FERTILE, FRIABLE NATURAL LOAM, UNIFORM IN COMPOSITION, FREE OF STONES, LIMBS, PLANTS AND THIER ROOTS, DEBRIS AND OTHER EXTRANEOUS MATTER OVER ONE INCH IN DIAMETER. THE SOIL SHALL BE CAPABLE OF SUSTAINED PLANT GROWTH AND HAVE A 5% MINIMUM ORGANIC CONTENT. IN SITUATIONS WHICH REQUIRE A CUSTOM TOPSOIL OR STRUCTURAL SOIL, THE SOIL MIXTURE SPECIFICATION WILL BE PROVIDED BY THE LANDSCAPE ARCHITECT.

SOIL AMENDMENTS: APPLY AS NECESSARY ACCORDING TO SOIL TEST RESULTS, AS PER MANUFACTURES SPECIFICATIONS.

ANTI-DESICCANT- "WILT PRUF" NCF OR EQUAL APPLY AS PER MANUFACTURERS' SPECIFICATIONS.

3.0 INSTALLATION

3.1) SOIL TESTING: LANDSCAPE CONTRACTOR SHALL PROVIDE A CERTIFIED SOIL ANALYSIS PRIOR TO ANY PLANT INSTALLATION TO DETERMINE ANY NECESSARY AMENDMENTS TO THE EXISTING SOIL CONDITIONS FOR SEEDING AND PLANTING. THE SOIL TESTING SHALL INCLUDE TEXTURE, pH, BUFFER pH, EXTRACTABLE NUTRIENTS, EXTRACTABLE HEAVY METALS, CATION EXCHANGE CAPACITY AND PERCENT BASE EXCHANGE SATURATION, ORGANIC MATTER AND SOLUABLE SALTS. THE ANALYSIS WILL ALSO BE REQUIRED FOR ESTABLISHING THE FERTILIZER PROGRAM REQUIRED. COORDINATE RESULTS AND PROVIDE WRITTEN RECOMMENDATIONS TO HAWK DESIGN, INC. 15 DAYS PRIOR TO INSTALLATION.

3.2) ALL PLANTS SHALL BE TRANSPORTED TO THE SITE IN COVERED TRUCKS, TARPAULIN COVERS SHALL BE UTILIZED TO PREVENT WIND DAMAGE OF LOAD.

3.3) DELIVER PLANT MATERIALS IMMEDIATELY PRIOR TO PLACEMENT. KEEP PLANT MATERIALS MOIST. DO NOT STORE PLANT MATERIAL ON PAVED AREAS. ROOTS OR BALLS SHALL BE PROTECTED FROM THE SUN OR DRYING WINDS. AS REQUIRED BY TEMPERATURE OR WIND CONDITIONS, APPLY ANTI-DESICCANT EMULSION TO PREVENT DRYING OUT OF PLANT MATERIALS.

3.4) CONDITIONS FOR PLANT REJECTION:
A) REJECT PLANTS WHEN BALL OF EARTH SURROUNDING ROOTS HAS BEEN CRACKED OR BROKEN PREPARATORY TO OR DURING THE PROCESS OF PLANTING.

B) WHEN BURLAP, STAVES AND ROPES REQUIRED IN CONNECTION WITH TRANSPLANTING HAVE BEEN DISPLACED PRIOR TO ACCEPTANCE.

C) WIND DAMAGED PLANT MATERIAL FROM POOR TARPAULIN COVER PROCEDURES ARE SUBJECT TO REJECTION.

3.5) ALL PLANT MATERIAL, WHICH CANNOT BE PLANTED IMMEDIATELY ON DELIVERY, SHALL BE SET ON THE GROUND IN A SHADED LOCATION AND SHALL BE TEMPORARILY PROTECTED WITH SOIL OR OTHER ACCEPTABLE MATERIAL. TEMPORARY WATERING OR IRRIGATION SHALL BE INCORPORATED AND REGULARLY CONDUCTED ON PLANTINGS IN HOLD AREAS.

3.6) IN CASE OF CONFLICTS DURING CONSTRUCTION WITH UTILITIES, ROCK MATERIALS, TREE ROOTS OR OTHER OBSTRUCTIONS FOR THE EXCAVATION OF SHRUB BEDS AND TREE PITS. CONTACT LANDSCAPE ARCHITECT FOR APPROVED ALTERNATE LOCATIONS.

3.7) SOIL PERMABILITY: TEST DRAINAGE OF PLANTING BEDS AND PITS BY FILLING WITH WATER TWICE IN SUCCESSION. CONDITIONS PERMITTING THE RETENTION OF WATER FOR MORE THAN 24 HOURS SHALL BE BROUGHT TO THE ATTENTION OF THE LANDSCAPE ARCHITECT.

3.8) SOIL EXCAVATIONS:
A) EXCAVATE TREE PITS AND SHRUB BEDS TO DEPTHS REQUIRED BY PLANTING DETAILS. ALL PITS SHALL BE CIRCULAR IN OUTLINE, EXCEPT FOR WHOLE BEDS. SEE APPROPRIATE PLANTNIG DETAILS.

B) SOIL EXCAVATIONS FOR BALLED & BURLAP AND CONTAINER PLANTINGS MUST BE NO LESS THAN 2X ROOT BALL DIAMETER, SEE PLANTING DETAILS. IF QUESTIONABLE SUBSURFACE SOIL CONDITIONS EXIST SUCH AS POOR DRAINAGE CONDITIONS, RUBBLE OR OBSTRUCTIONS, REPORT TO THE LANDSCAPE ARCHITECT AND CONSTRUCTION MANAGER BEFORE PLANTING.

3.9) GRADING:
A) VERIFY GRADES PRIOR TO PLANTING, THE CONTRACTOR SHALL VERIFY THAT CONSTRUCTED GRADES ARE AS INDICATED ON PLANS. THE CONTRACTOR SHALL NOTIFY THE LANDSCAPE ARCHITECT IF ADJUSTMENTS TO PLANT PLACEMENT MAY BE REQUIRED DUE TO FIELD CONDITIONS AND FINAL GRADING.

B) POSITIVE DRAINAGE SHALL BE MAINTAINED AWAY FROM AND AROUND BUILDINGS (REFER TO ENGINEERS GRADING PLANS). REPORT ANY CONFLICTS TO HAWK DESIGN, INC. PRIOR TO INSTALLATION.

C) FINISH GRADE OF PLANTINGS SHALL BE EQUIVALENT TO FORMER EXISTING GRADE OF PLANT IN THE NURSERY.

3.10) BALLED AND BURLAPED (B&B) MATERIALS:
A) REMOVE ROOT BASKETS (INCLUDING WIRE BASKETS), BURLAP, WRAPS AND TIES ENTIRELY AND DISCARD FROM SITE.

3.0 INSTALLATION CON'T.

3.11) CONTAINER GROWN STOCK: SHALL BE REMOVED FROM CONTAINER BY CUTTING CONTAINER AWAY TO AVOID ROOT DAMAGE TO PLANT ROOT SYSTEM. IF PLANT ROOT IS BOUND, SLICE ROOT BALLS APPROXIMATELY 2" DEEP WITH KNIFE OR SHARP SPADE.3.12) DO NOT USE MUDDY OR FROZEN SOIL TO BACKFILL PLANTINGS.

3.13) WATERING: THOROUGHLY WATER UNTIL SOIL IS SATURATED AROUND ALL TREES AND SHRUBS AFTER PLANTING AND THROUGHOUT THE TIME PERIOD UNTIL FINAL ACCEPTANCE FROM CLIENT. DURING DRY CONDITIONS, WATER AS REQUIRED TO MAINTAIN PLANTS IN A WILT-FREE CONDITION.

3.14) PRUNING: ONLY REMOVE DEAD OR BROKEN BRANCHES FROM PLANTS.

3.15) STAKING AND GUYING: ALL TREES TO BE STAKED AND GUYED WITHIN 48 HOURS OF PLANTING. METHODS AND MATERIALS FOR STAKING AND GUYING ARE ILLUSTRATED IN INDIVIDUAL PLANTING DETAILS. NEATLY FLAG ALL GUY WIRES WITH ROT RESISTANCE YELLOW TREE MARKING RIBBON.

3.16) STAKE OUT PLANT LOCATIONS: PRIOR TO PLANTING THE CONTRACTOR SHALL LAYOUT THE EXTENT OF THE PLANT BEDS AND PROPOSED LOCATIONS FOR B&B PLANTS FOR REVIEW BY THE OWNER AND LANDSCAPE ARCHITECT.

3.17) PLANTING FIELD ADJUSTMENTS:
A) THE CONTACTOR IS TO SLIGHTLY ADJUST PLANT LOCATIONS IN THE FIELD AS NECESSARY TO BE CLEAR OF DRAINAGE SWALES AND UTILITES.

B) LARGE GROWING PLANTS ARE NOT TO BE PLANTED IN FRONT OF WINDOWS OR UNDER BUILDING OVERHANGS. NOTIFY THE LANDSCAPE ARCHITECT OF DISCREPANCIES IN PLANTING PLAN VS. FIELD CONDITIONS.

C) SHRUBS PLANTED NEAR HVAC UNITS ARE TO BE LOCATED SO THAT SHRUBS AT MATURITY WILL MAINTAIN ONE FOOT (1') AIRSPACE BETWEEN THE UNIT AND THE PLANT. ANY PLANTING SHOWN ADJACENT TO CONDENSER UNITS SHALL BE PLANTED TO SCREEN THE UNITS. SHOULD THE CONDENSER UNITS BE INSTALLED IN LOCATIONS DIFFERENT FROM THOSE SHOWN ON THE PLAN, IT WILL BE THE CONTRACTOR'S RESPONSIBILITY TO NOTIFY THE LANDSCAPE ARCHITECT AND INSTALL THE MATERIAL AROUND THE CONDENSERS AND ADJUST THE OTHER PLANTING ACCORDINGLY.

3.18) PLANT BED EDGES/LINES: GROUPS OF SHRUBS, PERENNIALS AND GROUNDCOVERS SHALL BE PLACED IN A CONTINUOUS MULCH BED WITH SMOOTH CONTINUOUS LINES. ALL MULCHED BED EDGES SHALL BE CURVILINEAR IN SHAPE, FOLLOWING THE CONTOUR OF THE PLANT MASS. TREES LOCATED WITHIN 4 FEET OF PLANT BEDS SHALL SHARE THE SAME MULCH BEDS.

3.19) A.D.A. - THE AMERICAN WITH DISABILITIES ACT STANDARDS REQUIRE THAT A 7 FOOT VERTICAL CLEARANCE BE MAINTAINED FROM TREE BRANCHES TO FINISHED GRADE WHERE PEDESTRIANS SIDEWALKS AND/OR TRAILS ARE LOCATED. THE CONTRACTOR IS TO ADJUST TREE PLANTINGS IN FIELD TO SLIGHTLY MINIMIZE BRANCH OVERHANG AMD COMPLY WITH THE A.D.A. ACT.

3.20) TREE SPACING MINUMUMS: TREES SHALL BE LOCATED A MINIMUM OF 4 FEET FROM WALLS AND WALKS WITHIN THE PROJECT. IF A CONFLICT ARISE BETWEEN ACTUAL SIZE OF AREA AND PLANS, THE CONTRACTOR SHALL CONTACT THE LANDSCAPE ARCHITECT FOR RESOLUTION. FAILURE TO MAKE SUCH CONFLICTS KNOWN TO LANDSCAPE ARCHITECT WILL RESULT IN CONTRACTOR'S LIABILITY TO RELOCATE MATERIALS.

3.21) WATERING: TREE PITS SHALL BE FLOODED 2 TIMES IN SUCCESSION WITH WATER AND EVALUATED FOR DRAINAGE CHARACTERISTICS AFTER A 24 HOUR PERIOD. AFTER PLANTING, PLANTS SHALL RECEIVE THE EQUIVALENT OF 2" OF WATER A WEEK ON AVERAGE UNLESS LOCAL RAINFALL IS ADEQUATE. PLANTS SHOULD BE WATERED UNTIL THE GROUND FREEZES.

4.0 SEEDING AND SODDING

4.1) SEEDING OF LAWN AREAS: GRASS SEED APPLICATION SHALL BE SPREAD AT THE RATE OF 5 LBS. PER 1,000 SQUARE FEET, SEEDING SHALL BE ACCOMPLISHED BY MEANS OF A HYDRO-SEEDING PROCESS. ALSO SEE SECTION 1.13.

4.2) WATERING OF SEEDED AREAS: 24 HOURS AFTER HYDRO SEEDING, THE CONTRACTOR SHALL WATER THE SEEDED AREA LIGHTLY AND SUFFICIENTLY TO A DEPTH OF TWO INCHES (2") 2 TIMES A DAY (BETWEEN THE HOURS OF 7 PM AND 7 AM), UNTIL THE SEEDS ARE ESTABLISHED.

4.3) SEEDED AREA PROTECTION: THE CONTRACTOR SHALL ERECT SUITABLE SIGNS AND BARRICADES NOTIFYING THE PUBLIC TO KEEP OFF THE SEEDED AREAS UNTIL WELL ESTABLISHED. ANY TRAFFIC DAMAGE AND VANDALISM THAT MAY OCCUR PRIOR TO FINAL ACCEPTANCE OF THE WORK SHALL BE REPAIRED AND RESEEDED AT THE OWNER'S EXPENSE. ANY DISTURBED OR DAMAGED BY THE CONTRACTOR SHALL BE REPAIRED IN ACCORDANCE WITH THE SPECIFICATIONS AT THE CONTRACTOR'S EXPENSE.

4.4) LAYING OF SOD: A KENTUCKY BLUEGRASS SOD MIX - BY LOCAL SOURCE AS SELECTED BY CONTRACTOR, SHALL BE FRESHLY CUT FROM THE SAME FIELD WITH 1/2 -3/4 INCHES OF SOIL. SOD SHALL BE LAID IMMEDIATELY WITH ANY STORED SOD BEING UNROLLED GRASS SIDE UP AND KEPT WATERED. LAY COURSES TIGHTLY TOGETHER WITHOUT OVERLAPPING WITH THE JOINTS STAGGERED. AFTER SODDING IS COMPLETE, ROLL LIGHTLY. THE CONTRACTOR SHALL WATER THE SODDED AREAS TO A DEPTH OF AT LEAST SIX INCHES AFTER THE SODDING PROCESS. OWNER SHALL THEN BE RESPONSIBLE FOR WATERING. THE FREQUENCY SHALL BE DETERMINED BY RAIN FALL AND WINDS WITH THE UPPER TWO OR THREE INCHES OF SOIL NOT DRYING OUT MARKEDLY.

4.5) SODDED AREA: INSPECTION AND ACCEPTANCE: FOUR WEEKS AFTER CONTRACTOR COMPLETES INSTALLATION, LANDSCAPE ARCHITECT SHALL INSPECT THE LAWN TO DETERMINE THE ACCEPTABILITY OF THE INSTALLATION. SODDED AREAS FAILING TO SHOW ADEQUATE ROOTING INTO THE SUBSOIL, OVERLAPPING, COURSE SEPARATION, UNEVENNESS OF THE SURFACE, UNEVEN COURSE COLOR AND EXCESSIVE BROADLEAF WEED CONTENT SHALL BE REPLACED. THE COST SHALL BE BORNE BY THE CONTRACTOR EXCEPT WHERE VANDALISM OR NEGLECT ON THE PART OF OTHERS NOT UNDER THE CONTRACTORS CONTROL HAS RESULTED IN DAMAGE.

4.6) FINAL APPROVAL: SEEDED AND SODDED AREAS WILL RECEIVE FINAL APPROVAL IF COVERAGE IS FULL AND CONSISTENT, FREE OF BARE SPOTS AND WEED FREE. WHEN GRASS IS CUT AT 2" HEIGHT NO SOIL SHOULD BE VISIBLE. SOD AREAS MUST HAVE RECEIVED A MINIMUM OF TWO MOWINGS. AREAS SODDED AFTER NOVEMBER 1ST WILL BE ACCEPTED THE FOLLOWING SPRING - ONE MONTH AFTER THE START OF THE GROWING SEASON, IF THE ABOVE CRITERIA HAS BEEN MET.

5.0 MAINTENANCE

5.1) MAINTENANCE DURING INSTALLATION: MAINTENANCE OPERATIONS SHALL BEGIN IMMEDIATELY AFTER EACH PLANT IS PLANTED AND SHALL CONTINUE AS REQUIRED UNTIL FINAL ACCEPTANCE AND THEN FOR THE GUARANTEE PERIOD. PLANTS SHALL BE KEPT IN A HEALTHY, GROWING CONDITION BY WATERING, PRUNING, SPRAYING, WEEDING AND ANY OTHER NECESSARY OPERATIONS OF MAINTENANCE. PLANT SAUCERS AND BEDS SHALL BE KEPT FREE OF WEEDS, GRASS AND OTHER UNDESIRED VEGETATION. PLANTS SHALL BE INSPECTED AT LEAST ONCE PER WEEK BY THE CONTRACTOR DURING THE INSTALLATION PERIOD AND ANY NEEDED MAINTENANCE IS TO BE PERFORMED PROMPTLY.

5.2) GRASS AND WEED CONTROL: THE CONTRACTOR SHALL BE RESPONSIBLE FOR MOWING ALL GRASS AROUND LANDSCAPE BEDS AND INDIVIDUAL TREES AND SHRUBS UNTIL FINAL ACCEPTANCE. WEED CONTROL AREAS SHALL INCLUDE ALL LANDSCAPE BEDS AND THE AREA WITHIN 2 FEET OF THE OUTER EDGE OF THE MULCH AREA OR INDIVIDUAL TREE/SHRUBS.

5.3) THE CONTRACTOR SHALL WATER, FERTILIZE, WEED, CULTIVATE, REMULCH, SPRAY TO CONTROL INSECT INFESTATION AND DISEASE AND PERFORM ANY OTHER GOOD HORTICULTURAL PRACTICE NECESSARY TO MAINTAIN THE PLANTS IN A LIVING HEALTHY CONDITION UPON THE TIME FOR TERMINATION OF HIS RESPONSIBILITY FOR CARE AS SET OUT HEREIN. THE CONTRACTOR SHALL BE RESPONSIBLE FOR THE PLANTS THROUGHOUT LIFE OF THE CONTRACT.

5.4) ALL PLANTS STOLEN, DAMAGED OR DESTROYED BY FIRE, AUTOMOBILES, VANDALISM OR ANY OTHER CAUSE, WITH THE EXCEPTION OF PLANTS DAMAGED OR DESTROYED BY THE OWNERS MAINTENANCE OPERATIONS, SHALL BE REPLACED BY THE OWNER PRIOR TO THE DATE OF FINAL ACCEPTANCE.

5.5) LANDSCAPE CONTRACTOR SHALL PREPARE MAINTENANCE SPECIFICATIONS AND SCHEDULE ANNUAL CARE OF ALL PLANTED AND LAWN AREAS INCLUDING FERTILIZING, WEEDING, MULCHING, BED EDGING, PRUNING AND PEST PREVENTION AND TREATMENT. SHRUBS SHALL NOT BE PRUNED FOR THE FIRST 3-5 YEARS UNLESS NECESSARY FOR SAFETY/STRUCTURAL CONCERNS. THE INTENT IS FOR THE PLANTINGS TO GROW INTO MASSES FOR SCREENING AND VISUAL INTEREST. SUBMIT MAINTENANCE SCHEDULE TO OWNER.

5.6) PLANTS SHALL RECEIVE THE EQUIVALENT OF 2" OF WATER A WEEK ON AVERAGE UNLESS LOCAL RAINFALL IS ADEQUATE. PLANTS SHOULD BE WATERED UNTIL THE GROUND FREEZES.

6.0 PLANT MATERIAL GUARANTEE

*CONTRACTOR SHALL GUARANTEE IN WRITING ALL PLANT MATERIAL AND LANDSCAPE IMPROVEMENTS FOR A PERIOD OF TWO YEARS. THE GUARANTEE IS TO INCLUDE THE FOLLOWING:

6.1) INSPECTIONS: PERFORM PERIODIC INSPECTIONS DURING GUARANTEE PERIOD WITH RESULTING WRITTEN REPORTS TO OWNER, PROJECT ADMINISTRATOR AND LANDSCAPE ARCHITECT STATING CONDITIONS AND RECOMMEND MAINTENANCE MODIFICATIONS. THE CONTRACTOR MUST CONTACT THE OWNER AND LANDSCAPE ARCHITECT AT LEAST 10 DAYS IN ADVANCE TO SCHEDULE ACCEPTANCE INSPECTION(S).

6.2) REMOVAL AND REPLACEMENT OF PLANTS PROVIDED BY CONTRACTOR TO BE DONE WITHIN THIRTY DAYS OF NOTIFICATION BY OWNER OF THEIR UNSATISFACTORY CONDITION DURING GROWING SEASONS. REPLACEMENT MATERIALS MUST BE EQUAL IN TYPE AND SIZE PER THE PROJECT'S PLANT LIST.

6.3) WHEN REPLACEMENT PLANT SPECIES IS EITHER NOT READILY AVAILABLE OR NO LONGER SUITABLE TO EXISTING SITE CONDITIONS WRITTEN NOTICE RECOMMENDATION OF SUBSTITUTION TO BE PROVIDED TO THE OWNER AND LANDSCAPE ARCHITECT WITHIN FIFTEEN DAYS FOR APPROVAL.

6.4) REMOVAL OF TREE'S SUPPORTS AND DEAD LIMBS PRIOR TO END OF GUARANTEE INSPECTION PERIOD.

6.5) CONTINUE WITH MAINTENANCE, SEE SECTION 5.0

6.6) GUARANTEE SHALL BEGIN UPON DATE OF FINAL ACCEPTANCE FROM OWNER AND WILL CONTINUE FOR TWO YEARS.

7.0 SITE CLEAN UP

7.1) SITE WORK CONDITIONS: EXCESS WASTE MATERIAL SHALL BE REMOVED DAILY WHEN PLANTING IN AN AREA HAS BEEN COMPLETED, THE AREA SHALL BE CLEARED OF ALL DEBRIS, SOIL PILES AND CONTAINERS DAILY. WHERE EXISTING GRASS AREAS HAVE BEEN DAMAGED OR SCARRED DURING PLANTING OPERATIONS, THE CONTRACTOR SHALL RESTORE DISTURBED AREAS TO THEIR ORIGINAL CONDITIONS AT HIS EXPENSE.

7.2) CLEAN PAVED AREAS UTILIZED FOR HAULING OR EQUIPMENT STORAGE AT END OF EACH WORKDAY.

7.3) MAINTAIN VEHICLES AND EQUIPMENT IN CLEAN CONDITION TO PREVENT SOILING OF ROADS, WALKS OR OTHER PAVED OR SURFACED AREAS.

7.4) REMOVE PROTECTIVE BARRIERS AND WARNING SIGNS AT TERMINATION OF LAWN ESTABLISHMENT.

8.0 LANDSCAPE IRRIGATION

8.1) LANDSCAPE IRRIGATION TO BE PROVIDED FOR ALL MAINTAINED AREAS. IRRIGATION PLAN TO BE SUPPLIED BY IRRIGATION CONTRACTOR FOR CLIENT AND TOWN REVIEW PRIOR TO INSTALLATION.

8.2) SMART CONTROLLERS AND WATER SAVING IRRIGATION HEADS SHALL BE USED.

Hawk Design, Inc.
Landscape Architecture
Land Planning
Sagamore, MA
508-833-8800
info@hawkdesigninc.com
www.hawkdesigninc.com

HAWK DESIGN, INC. 2012
THIS DRAWING AND ALL INFORMATION CONTAINED HEREON IS PROPRIETARY INFORMATION OF HAWK DESIGN, INC. AND MAY NOT BE COPIED OR REPRODUCED, EITHER IN WHOLE OR IN PART, BY ANY METHOD, WITHOUT WRITTEN PERMISSION OF HAWK DESIGN, INC.

Date: 11/13/12

Revisions:

Num.	Date	Description
1.	1/29/13	Signage revision, add Option B Townhouse 1,2 & 3, add typical townhouse streetscape
2.	2/26/13	Per Planning Board and peer review comments
3.	4/1/13	Revise per site plan revisions
4.	4/5/13	Per Planning Board and peer review comments
5.	4/16/13	Per site plan revisions, Planning Board & peer review comments

MASSACHUSETTS THOMAS E. MINER NO. 918 REGISTERED LANDSCAPE ARCHITECT
4/16/13

Danforth Green, LLC.
Framingham, Massachusetts

Drawn By: BNL | Checked By: TM

Planting Notes

Scale: As Noted

Sheet: L5.2

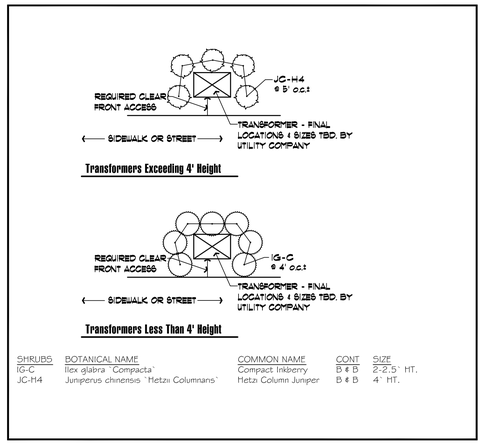

SHRUBS	BOTANICAL NAME	COMMON NAME	CONT	SIZE
IG-C	Ilex glabra `Compacta`	Compact Inkberry	B & B	2'-2.5' HT.
JC-H4	Juniperus chinensis `Hetzii Columnans`	Hetzi Column Juniper	B & B	4' HT.

Typical Transformer Screen Planting
Scale: 1" = 10'-0"

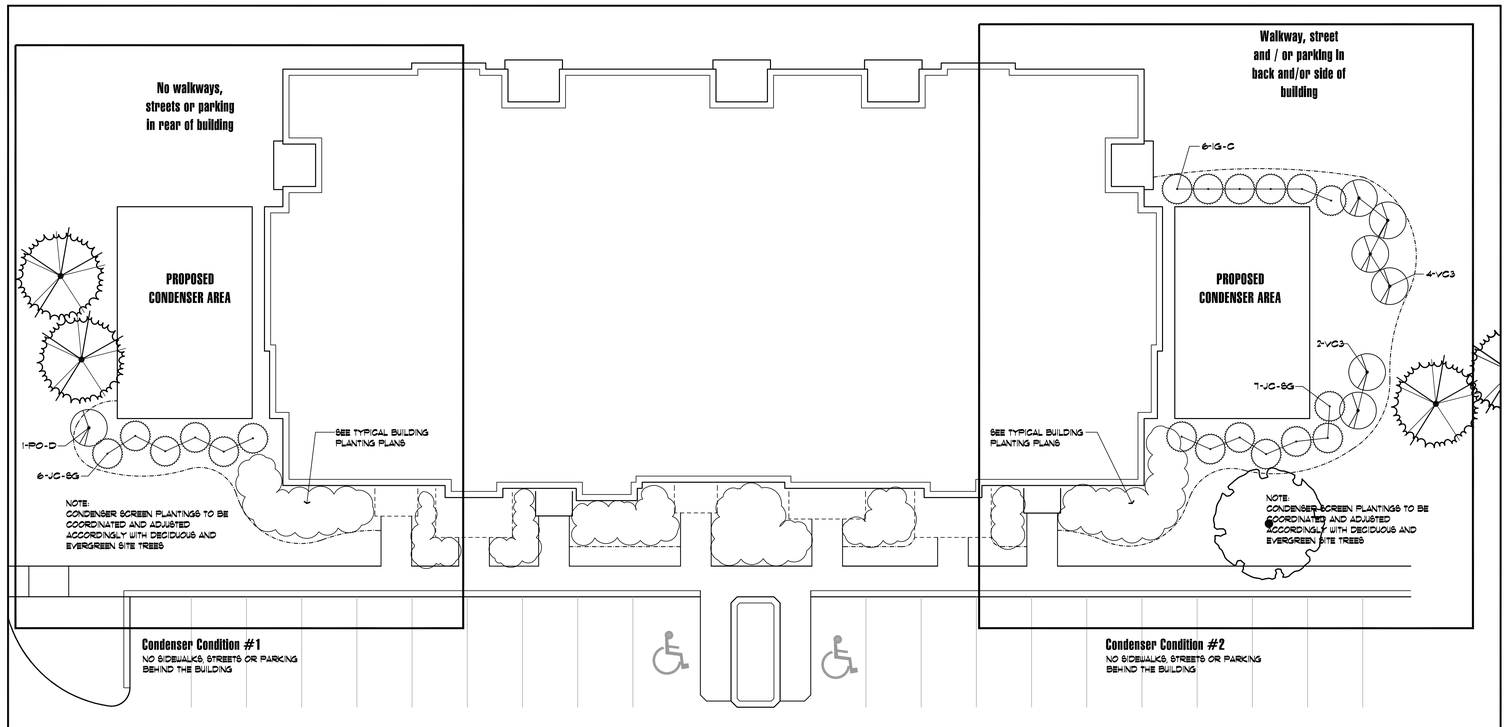

Plant List

SHRUBS	QTY	BOTANICAL NAME	COMMON NAME	CONT	SIZE
IG-C	6	Ilex glabra `Compacta`	Compact Inkberry	B & B	2'-2.5' HT.,
JC-SG	13	Jumperus chinensis `Sea Green`	Sea Green Juniper	B & B	18-24" SPD.
PO-D	1	Physocarpus opulifolius `Diablo`	Diablo Ninebark	B & B	3-4' HT
VC3	6	Viburnum cassinoides	Viburnum	B & B	3-4' HT

Condenser Unit Screen Plantings
Scale: 1" = 10'-0"

0 10 20 30 feet
SCALE: 1" = 10'

Base plan information provided electronically by Vanasse Hangen Brustlin, Inc.

Hawk Design, Inc.
Landscape Architecture
Land Planning
Sagamore, MA
508-833-8800
Info@hawkdesigninc.com
www.hawkdesigninc.com

HAWK DESIGN, INC. 2012

THIS DRAWING AND ALL INFORMATION CONTAINED HEREON IS PROPRIETARY INFORMATION OF HAWK DESIGN, INC. AND MAY NOT BE COPIED OR REPRODUCED, EITHER IN WHOLE OR IN PART, BY ANY METHOD, WITHOUT WRITTEN PERMISSION OF HAWK DESIGN, INC.

Date: 4/5/13

Revisions:
Num. Date Description

MASSACHUSETTS JAMES E. MILLER REGISTERED LANDSCAPE ARCHITECT NO. 978
4/16/13

Danforth Green, LLC.
Framingham, Massachusetts

Drawn By: BNL | Checked By: TM

Typical Condenser Unit & Transformer Planting Plans

Scale: 1" = 10'-0"

Sheet: SKL1