TOWN OF FRAMINGHAM
DEPARTMENT OF PUBLIC WORKS

TYPICAL DRAIN MANHOLE

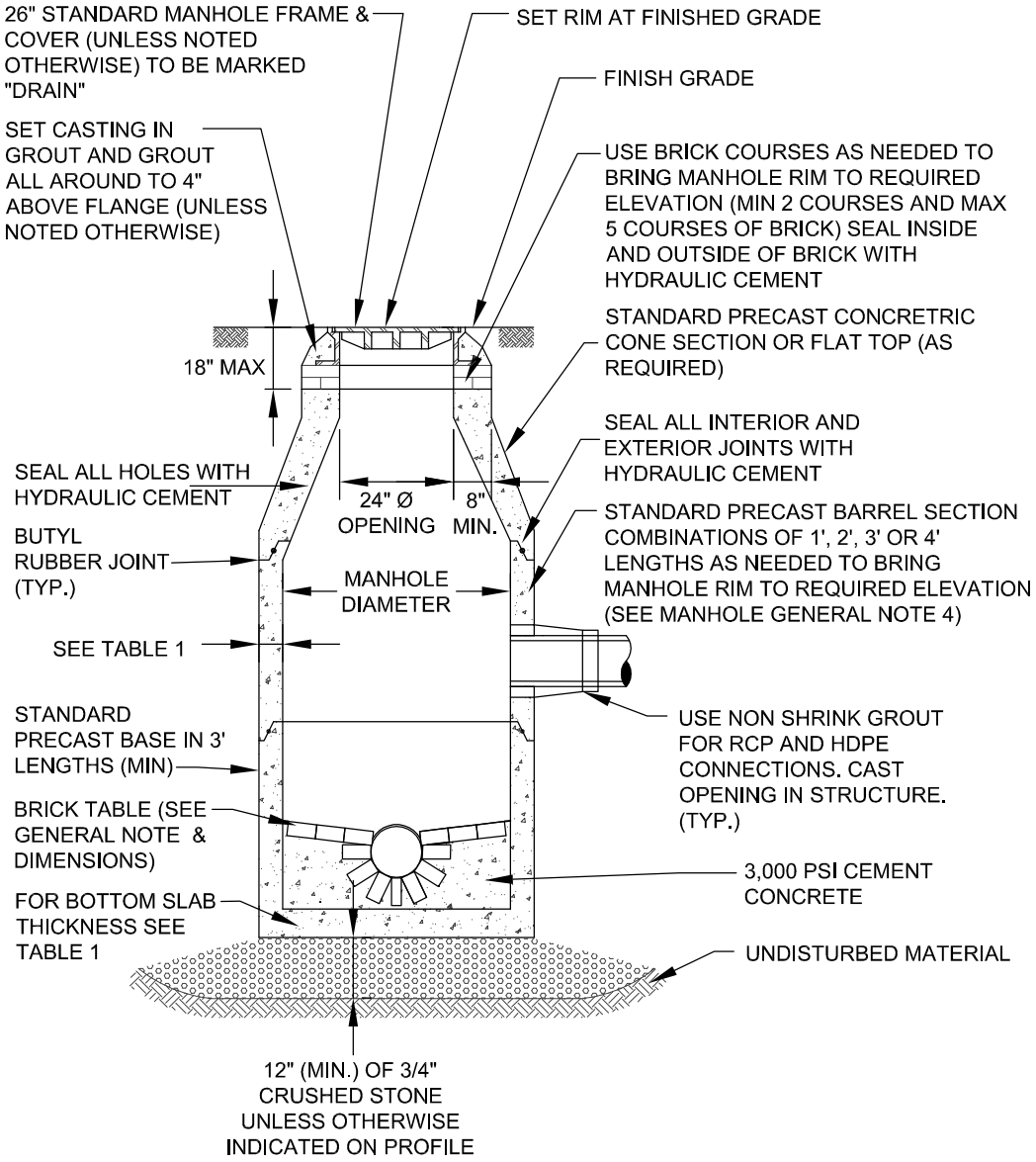

SECTION A-A

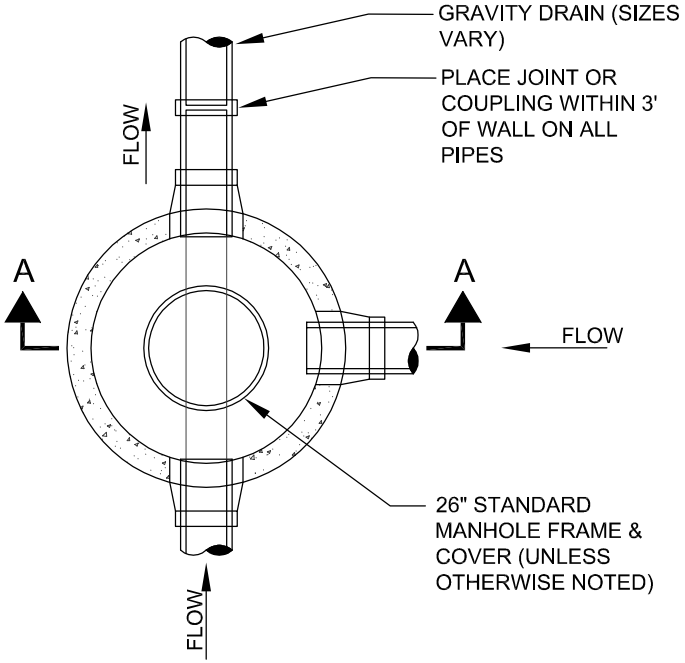

PLAN

NOT TO SCALE

DATE: MARCH 2012
REV: 3

DETAIL NO. D-4.2.0