TOWN OF FRAMINGHAM
DEPARTMENT OF PUBLIC WORKS

SUMP MANHOLE

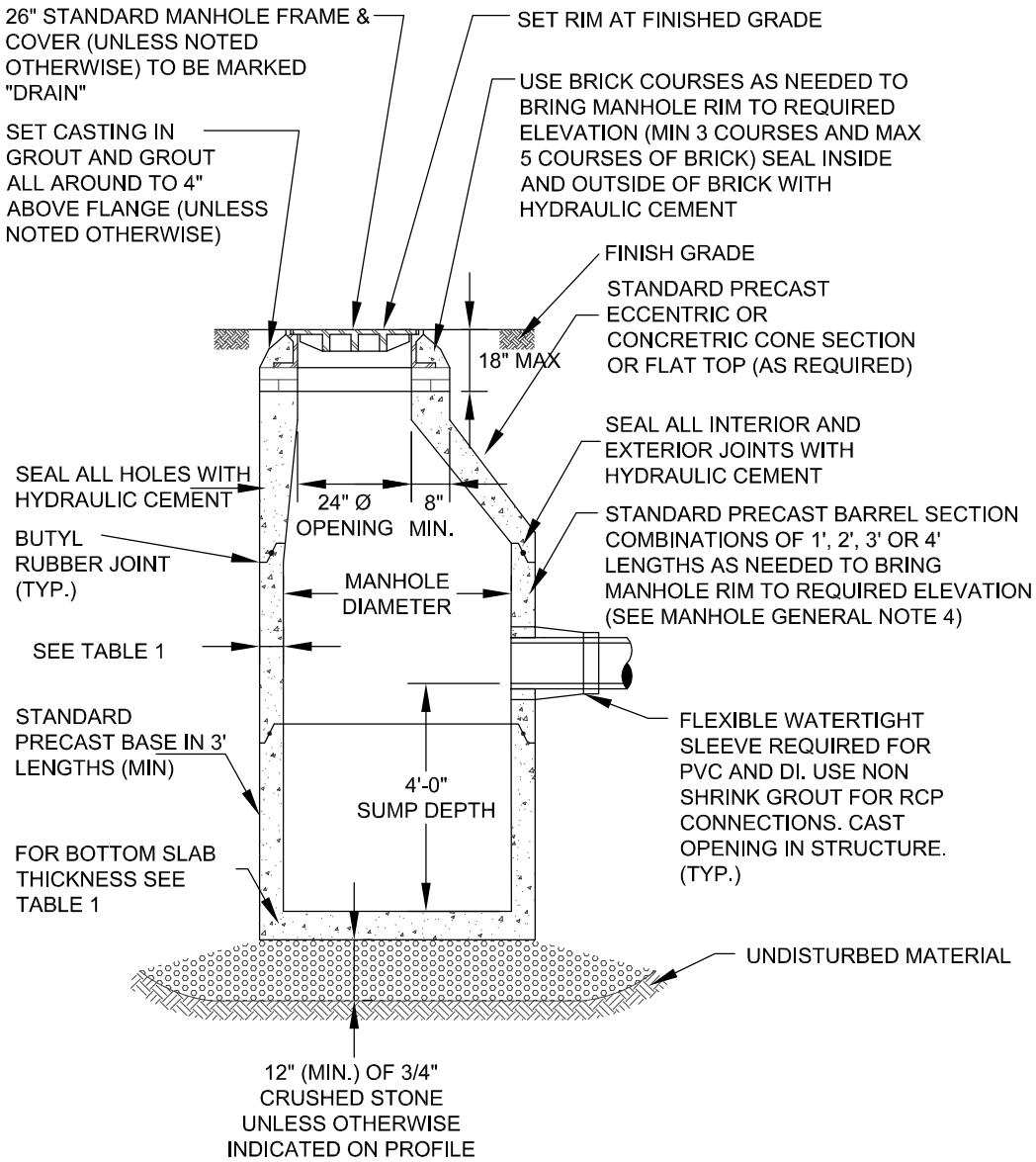

SECTION A-A

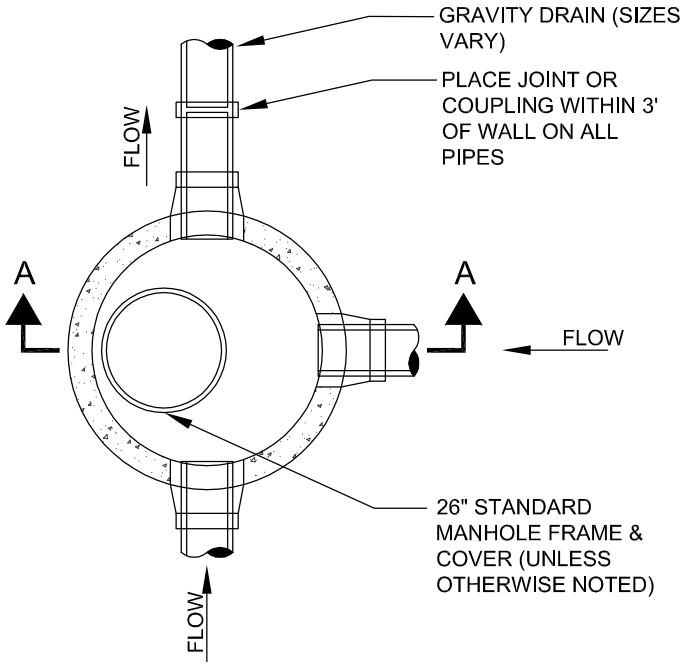

PLAN

NOT TO SCALE

DATE: FEB. 2010
REV: 1

DETAIL NO. D-4.2.2