SANOFI ICBF PROJECT
2-8 NEW YORK AVENUE, FRAMINGHAM, MA
SITE PLAN APPROVAL

PROJECT SITE

LOCUS MAP
1" = 500'

PROJECT SITE

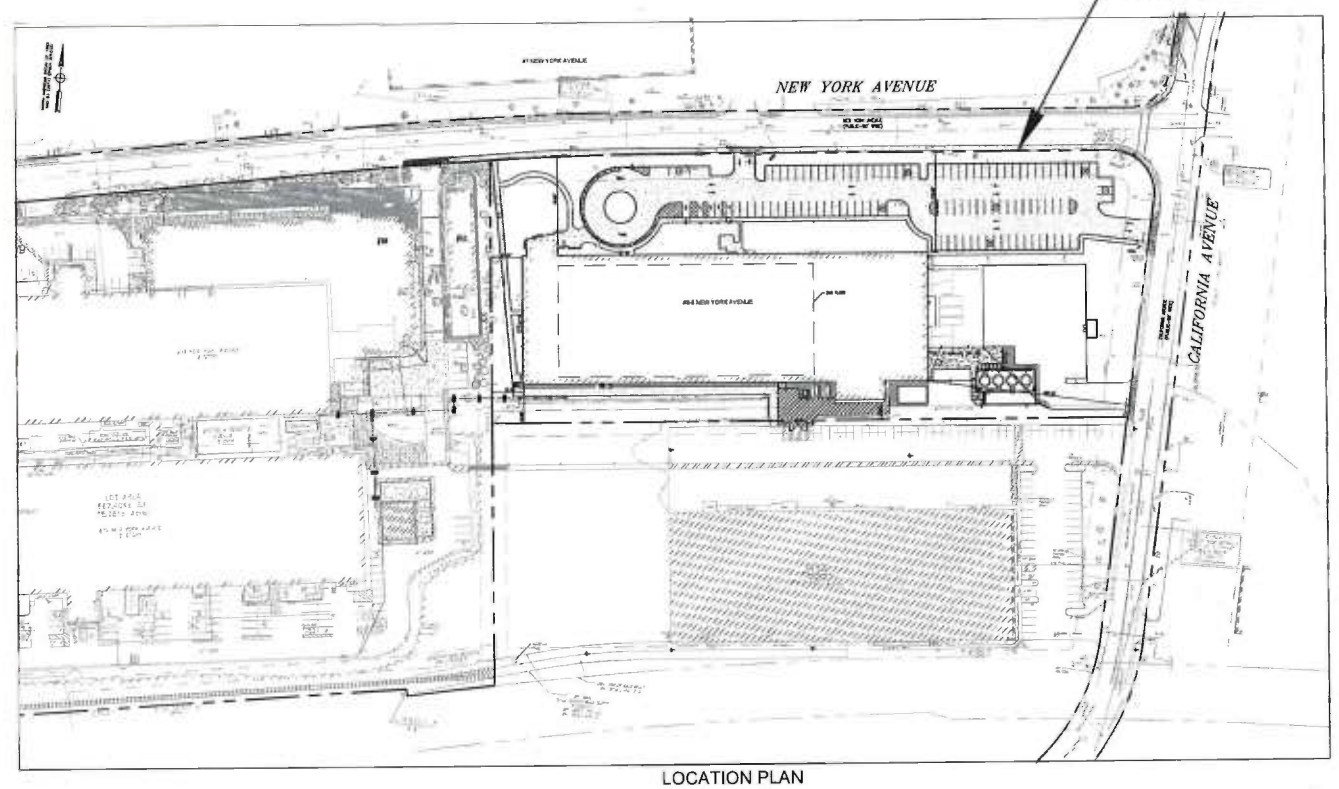

LOCATION PLAN
1" = 100'

ZONING SUMMARY

TOWN OF FRAMINGHAM
PRESENT ZONE(S), TP=TECHNOLOGY PARK
ASSESSORS PARCEL ID: 10046300000900030

	REQUIRED:	EXISTING SITE: (APPROVED 1-23-14)	PROPOSED SITE:
LOT AREA:	43,560 SQ. FT. (MIN.)	241,326 SQ. FT.	241,326 SQ. FT.
BUILDING AREA		74,368 SQ. FT. (TOTAL) (71,433 GROSS SF)	113,950 SQ. FT. (TOTAL) (75,483 GROSS SQ. FT.)
FRONTAGE:	100 FEET (MIN.)	775 FT. (NEW YORK), 303 FT. (CALIFORNIA), 1078 FT. (TOTAL)	775 FT. (NEW YORK), 303 FT. (CALIFORNIA), 1078 FT. (TOTAL)
BUILDING SETBACKS:			
FRONT:	30 FEET (MIN.)	90.0 FEET (NEW YORK), 237 FEET (CALIFORNIA)	90.0 FEET (NEW YORK), 237.0 FEET (CALIFORNIA)
SIDE:	15 FEET (MIN.)	37.9 FEET	20.5 FEET
BUILDING HEIGHT:	6 STORIES/100 FEET (MAX.)	1 STORIES/24'-4" FEET	2 STORIES/52'-0" FEET
FLOOR AREA RATIO:	0.8 (BASE)	0.30	0.31
LANDSCAPE OPEN SPACE:	20% (MIN.)	30.7% (73,995 SF)	29.9% (72,225 SF)

PARKING SUMMARY

REQUIRED:	BUILDING SQ. FT.	PARKING REQUIRED 1 SPACE/800 SF	PARKING REQUIRED AT 1 SPACE/EMPLOYEE	EXISTING PARKING SPACES APPROVED
PARKING SPACES	75,483 SQ. FT.	94	70	109
HANDICAPPED SPACES	5 Spaces for 100-120 space lot	5	-	4 + 1 Van Accessable

OFF-STREET LOADING SUMMARY

FIRST LOADING SPACE REQUIRED 1 SPACE/5,000 SF	ADDITIONAL LOADING SPACE REQUIRED 1 SPACE/25,000SF	LOADING SPACES PROVIDED
1	3	4

FRAMINGHAM PLANNING BOARD ENDORSEMENT

DATE OF ENDORSEMENT

APPLICANT:

SANOFI
11 PLEASANT STREET CONNECTOR
FRAMINGHAM, MA 01701

ENGINEER:

JACOBS
THREE TOWER BRIDGE
TWO ASH STREET, SUITE 3000
CONSHOHOCKEN, PA. 19428

ARCHITECT:

JACOBS
THREE TOWER BRIDGE
TWO ASH STREET, SUITE 3000
CONSHOHOCKEN, PA. 19428

SURVEYOR:

TETRATECH
ONE GRANT STREET
FRAMINGHAM, MA. 01701-9005

DRAWING INDEX

C-1	CIVIL COVER SHEET
C-2	GENERAL NOTES
C-3	EXISTING CONDITIONS, DEMOLITION & SEDIMENT CONTROL PLAN
C-4	UTILITY DEMOLITION PLAN
C-5	SITE LAYOUT & MATERIALS PLAN
C-6	GRADING & DRAINAGE PLAN
C-7	UTILITY PLAN
C-8	LANDSCAPE PLAN
C-9	FIRE TRUCK ACCESS PLAN
C-10	ENLARGED PLANS
C-11	CONSTRUCTION DETAILS 1
C-12	CONSTRUCTION DETAILS 2
C-13	CONSTRUCTION DETAILS 3
C-14	CONSTRUCTION DETAILS 4
C-15	CONSTRUCTION DETAILS 5
C-16	CONSTRUCTION DETAILS 6
C-17	CONSTRUCTION DETAILS 7
C-18	UTILITY PROFILES
C-19	LANDSCAPE DETAILS
E-1	LIGHTING PLAN
FP-1	FIRE PUMP ENCLOSURE
A-1	EXTERIOR ELEVATIONS
A-2	EXTERIOR ELEVATIONS

SANOFI

Framingham, MA

KEYPLAN

PROJECT TITLE
8NYA – ICBF
ICBF Project

CONSULTANTS
JACOBS
THREE TOWER BRIDGE
TWO ASH STREET, SUITE 3000
CONSHOHOCKEN, PA. 19428-2074
TEL: 610-238-1500
FAX: 610-238-1100
JACOBS ENGINEERING PROJECT NO. 63RR3101

CURRENT REVISION	B
REVISION DESCRIPTION	Issued for SPA
DESIGN BY: MM	REVISION DATE: 11/28/2016
DRAWN BY: AJW	APPROVED BY: RES

REV	DATE	REVISION HISTORY	DSN	DRN	APP
B	11/28/2016	Issued for SPA	MM	AJW	RES
A	10/28/2016	Issued for Review	MM	MM	RES

CAD FILE
C-1.dwg

SANOFI PROJECT NUMBER

VENDOR JOB NUMBER
63RR3101

SCALE
As Noted

VENDOR DRAWING NUMBER
63RR3101/C.C00/0005

SECURITY NOTICE
SANOFI CONFIDENTIAL INFORMATION
USE PURSUANT TO COMPANY INSTRUCTIONS

SHEET TITLE
Civil
COVER SHEET

DOCUMENT TYPE

PRE EDMS NUMBER / REFERENCE DRAWING

DOCUMENT NUMBER
C-1

Nov 30, 2016 - 6:59am C:\SAVEDFILES\63RR3101X\63RR3101X_C-1.dwg Plotted by jimmatin

GENERAL NOTES

1. ELEVATIONS REFER TO THE TOWN OF FRAMINGHAM DATUM. REFERENCE THE 'EXISTING CONDITIONS SURVEY FOR 4-8 NEW YORK AVENUE' PREPARED BY SMC SURVEYING AND MAPPING CONSULTANTS, DATED 10/21/2016.
2. PARCELS SHOWN HEREON ARE LOCATED IN ZONE C AS SHOWN ON FLOOD INSURANCE RATE MAP, TOWN OF FRAMINGHAM, MASSACHUSETTS, COMMUNITY PANEL NUMBER 250193 0004 C, EFFECTIVE DATE MARCH 15, 1984.
3. UNDERGROUND UTILITIES WERE COMPILED FROM ON SITE SURVEY AND AVAILABLE UTILITY COMPANY AND PUBLIC AGENCY RECORD PLANS AND ARE APPROXIMATE ONLY. BEFORE CONSTRUCTION CALL "DIG SAFE" AT 1-888-DIG-SAFE. CONTRACTOR TO LOCATE THE EXISTING UNDERGROUND UTILITIES WITH GROUND PENETRATING RADAR SURVEYS PRIOR TO EXCAVATION.
4. IF DEWATERING IS REQUIRED THE CONTRACTOR SHALL USE PORTABLE SETTLING TANKS OR OTHER METHODS APPROVED BY THE ENGINEER AND IN ACCORDANCE WITH THE EXISTING CONSERVATION COMMISSION REQUIREMENTS.
5. ALL WHEELCHAIR RAMPS SHALL BE BUILT IN ACCORDANCE WITH THE MASSACHUSETTS DOT ENGINEERING DIRECTIVE -WALKS AND WHEELCHAIR RAMPS, #E-12-005, DATED 3/27/2012 AND THE CONSTRUCTION AND TRAFFIC STANDARD DETAILS, 1996, OR LATEST EDITION.
6. ALL WORK MUST BE INSPECTED BY A DEPARTMENT OF PUBLIC WORKS UTILITY INSPECTOR. TO SCHEDULE A PRE-CONSTRUCTION MEETING, CONTACT MICHAEL AHEARN AT (508) 958-3819 OR (508) 532-6010 FORTY EIGHT HOURS PRIOR TO THE START OF WORK.
7. IN ACCORDANCE WITH THE TOWN OF FRAMINGHAM, STREET OPENING POLICY (SOP), ANY PLANNED WORK FALLING WITHIN THE PUBLIC RIGHT-OF-WAY WILL REQUIRE A STREET OPENING PERMIT. STREET OPENING SEASON IS APRIL 1ST TO NOVEMBER 15TH. THE WORK PERFORMED UNDER SAID PERMIT SHALL BE IN COMPLIANCE WITH THE TOWN OF FRAMINGHAM STREET OPENING POLICY.
8. ALL SITE DRAINAGE, WATER, AND SEWER WORK OUTSIDE THE BUILDING FOOTPRINT SHALL BE PERFORMED BY A LICENSED FRAMINGHAM DRAIN LAYER.
9. A TRENCH OPENING PERMIT (TOP) SHALL BE OBTAINED PRIOR TO THE EXCAVATION OF ANY TRENCH. A TRENCH IS DEFINED UNDER MGL 82A AND 520 CMR 14.00 AS ANY EXCAVATION GREATER THAN 3" IN DEPTH AND LESS THAN 15' BETWEEN SOIL WALLS AS MEASURED FROM THE BOTTOM.
10. ALL PROPOSED WORK SHALL COMPLY WITH TOWN OF FRAMINGHAM DPW CONSTRUCTION STANDARDS. TOWN OF FRAMINGHAM CONSTRUCTION STANDARDS ARE AVAILABLE ON THE TOWN OF FRAMINGHAM WEBSITE.
11. CONTRACTOR SHALL SCHEDULE A MEETING WITH SUBCONTRACTORS, DESIGN ENGINEER & OWNER'S SAFETY REPRESENTATIVE TO REVIEW ROLES / RESPONSIBILITIES; EXPECTED SUBMITTALS; ANY PERMITS THAT MAY NEED TO BE OBTAINED; AND OUTLINE THE COORDINATION WITH OTHER TRADES PRIOR TO COMMENCEMENT OF WORK.
12. CONTRACTOR SHALL COMPLY WITH ALL OF THE CONDITIONS IDENTIFIED IN APPLICABLE PERMITS AND SPECIFICALLY THOSE IDENTIFIED IN THE CONDITIONS OF APPROVAL GRANTED BY THE CONSERVATION COMMISSION, PLANNING BOARD AND OWNERS REPRESENTATIVE.
13. CONTRACTOR SHALL COMPLY WITH THE 2009 MASSACHUSETTS PLUMBING CODE FOR ALL PLUMBING RELATED WORK.
14. FIRE WATER SYSTEMS TO BE INSTALLED IN ACCORDANCE WITH FM 3-10 INSTALLATION AND MAINTENANCE OF PRIVATE FIRE SERVICE MAINS AND THEIR APPURTENANCES.

PLUMBING NOTES:

1. INSTALLATION OF ALL PLUMBING SYSTEMS SHALL BE IN ACCORDANCE WITH THE FOLLOWING CODES AND STANDARDS
   A. MASSACHUSETTS STATE PLUMBING CODE
   B. TOWN OF FRAMINGHAM STANDARDS
   C. SANOFI STANDARDS
   D. NFPA APPLICABLE STANDARDS, AS ADOPTED BY MASSACHUSETTS STATE BUILDING CODE, OR NFPA (LATEST ADDITION)
   E. MASSACHUSETTS STATE BUILDING COED, 8TH EDITION
   F. APPLICABLE D.E.P. STANDARDS
   G. FM GLOBAL
2. ALL DRAINAGE PIPING SHALL BE PITCHED AT A MINIMUM OF 1/8" PER FOOT FOR PIPING 4" SIZE AND ABOVE, AND OF 1/4" PER FOOT FOR PIPING SMALLER THAN 4" SIZE, UNLESS CLEARLY INDICATED FOR STEEPER PITCH ON THE DRAWINGS.

DEMOLITION NOTES

1. THE CONTRACTOR SHALL GRIND OR REMOVE ALL BITUMINOUS CONCRETE PAVEMENT BETWEEN SAWCUT LINES AND AS INDICATED ON THE PLAN.
2. THE CONTRACTOR SHALL REMOVE AND DISPOSE OF ALL TOPSOIL, TREES AND ROOT SYSTEMS TO DESIGNATED BE DEMOLISHED.
3. THE CONTRACTOR SHALL CALL DIG-SAFE 72 HOURS PRIOR TO THE BEGINNING OF WORK.
4. THE CONTRACTOR SHALL COORDINATE WITH ALL UTILITY COMPANIES FOR UTILITY DEMOLITION OR DISCONNECTION. AT NO TIME SHALL THE CONTRACTOR DEMOLISH OR REMOVE ANY EXISTING UTILITY THAT SERVICES SURROUNDING BUILDINGS WITHOUT HAVING THE RELOCATED UTILITY IN SERVICE FIRST.
5. SELECTIVE UTILITIES/STRUCTURES WITHIN LIMIT OF WORK SHALL BE REMOVED AS NOTED. THE CONTRACTOR WILL VERIFY THAT ANY UTILITY TO BE REMOVED IS NOT IN ACTIVE SERVICE.
6. ALL WORK SHALL BE CONDUCTED IN ACCORDANCE WITH LOCAL, STATE, AND FEDERAL REGULATIONS.
7. THE CONTRACTOR SHALL BE RESPONSIBLE FOR PROVIDING ANY AND ALL SAFETY MEASURES TO INSURE THE PROTECTION OF THE PUBLIC FROM HARM, AS DEEMED NECESSARY BY THE TOWN, OWNER AND ENGINEER. THIS INCLUDES MAINTAINING SECURITY OF SITE FENCE AND GATE(S) DURING WORK AND NON-WORK HOURS.
8. DAMAGE OF PROPERTY BEYOND THE WORK LIMITS CAUSED BY THE CONTRACTOR'S OPERATIONS SHALL BE REPAIRED BY THE CONTRACTOR AT THE CONTRACTOR'S EXPENSE SUBJECT TO APPROVAL BY THE OWNER.
9. ANY ITEM TO BE REUSED ON SITE WILL BE STOCKPILED IN AREAS APPROVED BY THE OWNER AND/OR CONSTRUCTION MANAGER. ALL STOCKPILES WILL BE PROTECTED FROM EROSION.
10. THE CONTRACTOR SHALL SUBMIT AS-BUILT DRAWINGS, ELECTRONIC FORMAT (CURRENT AUTOCAD DRAWING) OF THE COMPLETED CONTRACT IN ACCORDANCE WITH THE BID DOCUMENTS.
11. THE CONTRACTOR SHALL PROVIDE CAPS AT ALL UTILITIES TO BE DEMOLISHED. UTILITIES EXTENDING BEYOND THE PROPERTY LINE SHALL BE CAPPED AT THE PROPERTY LINE.
12. PROTECT OR REMOVE/REPLANT ALL EXISTING LANDSCAPING MATERIALS NOT DESIGNATED FOR DEMOLITION DISTURBED DURING CONSTRUCTION.
13. THE CONTRACTOR SHALL BE RESPONSIBLE FOR PROVIDING AN EMERGENCY ACCESS PLAN FOR EXISTING BUILDINGS TO REMAIN DURING DEMOLITION/CONSTRUCTION.
14. THE CONTRACTOR IS RESPONSIBLE FOR PROVIDING TRASH RECEPTICLES AND SERVICES AS NECESSARY TO KEEP THE SITE FREE FROM TRASH AND DEBRIS AT ALL TIMES.
15. THE CONTRACTOR SHALL INSURE THAT ALL TRAFFIC IS MAINTAINED THROUGHOUT CONSTRUCTION AND THAT FLAGGERS AND POLICE DETAILS ARE EMPLOYED AS NECESSARY TO KEEP TRAFFIC AT A MINIMUM.
16. THE CONTRACTOR SHALL INSTALL ALL TEMPORARY EROSION CONTROL INFRASTRUCTURE AS IDENTIFIED ON PROJECT SWPPP PLANS IN ACCORDANCE WITH THE EXISTING PERMIT.
17. THE CONTRACTOR SHALL REMOVE AND DISPOSE OF ALL DEMOLISHED MATERIALS, IF NOT REUSED, OFF THE SITE IN A LEGAL MANNER.
18. THE CONTRACTOR SHALL NOTIFY THE ENGINEER IMMEDIATELY IF AN EXISTING UTILITY IS ENCOUNTERED THAT IS NOT SHOWN ON THE PLANS.
19. CONTRACTOR IS RESPONSIBLE FOR REMOVING CONSTRUCTION TRAILER PRIOR TO COMPLETION OF WORK.
20. LANDSCAPING IN SLOPE AREA SHALL BE RELOCATED AS NECESSARY TO INSTALL PROPOSED WALKWAY. CONTRACTOR SHALL NOTIFY SANOFI AND OBTAIN APPROVAL FOR NEW LOCATIONS PRIOR TO EXCAVATING.
21. EXISTING CONSTRUCTION FENCE AND TEMPORARY LIGHTING AROUND PERIMETER OF SITE INSTALLED BY PREVIOUS CONTRACTOR WILL REMAIN IN PLACE, HOWEVER THE CONTRACTOR SHALL BE RESPONSIBLE FOR MAINTAINING, RELOCATING, REPLACING AS NECESSARY.
22. CONTRACTOR SHALL MAINTAIN PROTECTION (SNOW FENCE) AROUND EXISTING TREES IN THIS LOCATION. IF WORK REQUIRES ADDITIONAL PROTECTION, CONTRACTOR IS RESPONSIBLE FOR ENSURING THAT NO DAMAGE IS DONE TO EXISTING TREES.
23. CONTRACTOR SHALL MAINTAIN AND PROTECT ALL EXISTING MONITORING WELLS. WELLS SHALL BE ADJUSTED TO FINISH GRADE AS NECESSARY. ADDITIONAL LOCATION INFORMATION SHOULD BE OBTAINED DIRECTLY FROM SANOFI.

EROSION CONTROL NOTES

1. NO LAND CLEARING OR GRADING SHALL BEGIN UNTIL ALL SEDIMENT CONTROL MEASURES HAVE BEEN INSTALLED AND VERIFIED AND CONFIRMED WITH THE FRAMMINGHAM CONSERVATION AGENT.
2. SHOULD CONSTRUCTION STOP FOR LONGER THAN 14 DAYS, THE SITE SHALL BE SEEDED AS SPECIFIED.
3. THE CONTRACTOR IS RESPONSIBLE FOR REMOVAL OF ALL EROSION CONTROL DEVICES SUBSEQUENT TO THE ESTABLISHMENT OF GRASS VEGETATION AS DETERMINED BY THE ENGINEER AND FINAL INSPECTION WITH THE FRAMMINGHAM CONSERVATION AGENT.
4. THIS PLAN SHALL NOT BE CONSIDERED ALL INCLUSIVE AS THE CONTRACTOR SHALL TAKE ALL NECESSARY PRECAUTIONS TO PREVENT SOIL SEDIMENT FROM LEAVING THE SITE.
5. CONTRACTOR SHALL COMPLY WITH ALL STATE AND LOCAL ORDINANCES THAT APPLY.
6. ADDITIONAL EROSION AND SEDIMENT CONTROL MEASURES WILL BE INSTALLED IF DEEMED NECESSARY BY ON SITE INSPECTION.
7. EXCAVATION ACTIVITIES SHALL NOT COMMENCE UNTIL APPROVAL TO DO SO HAS BEEN RECEIVED BY GOVERNING AUTHORITIES.
8. ALL EXISTING STRUCTURES, FENCING, TREES, AND ETC., DESIGNATED FOR REMOVAL SHALL BE REMOVED AND DISPOSED OF OFF SITE.
9. NO BURNING SHALL BE PERMITTED ON SITE.
10. THE CONTRACTOR IS TO FOLLOW ALL EROSION CONTROL MEASURES AS SPECIFIED ON THE EXISTING APPROVED STORMWATER POLLUTION PREVENTION PLAN (SWPPP).
11. SEDIMENT SHALL BE REMOVED FROM ALL SILT SACKS BEFORE IT IS 50% FULL.
12. CONTRACTOR SHALL MAINTAIN SEDIMENT CONTROL PREVIOUSLY INSTALLED. THIS REQUIRES THE CONTRACTOR TO INSPECT AND REPLACE AS NECESSARY PRIOR TO COMMENCEMENT OF WORK. THE ENGINEER AND CONTRACTOR ARE RESPONSIBLE FOR CONDUCTING FRAMMINGHAM CONSERVATION COMMISSION FIRST INSPECTION PRIOR TO COMMENCEMENT OF EXCAVATIONS.
13. CONTRACTOR SHALL UTILIZE TEMPORARY CONTROLS FOR EROSION CONTROL. WHEN WORK IN THIS AREA REQUIRES REMOVAL OF STORMWATER CONTROLS, CONTRACTOR IS RESPONSIBLE FOR REMOVING AND DISPOSING ALL PIPES, STRUCTURES, ETC. AS NECESSARY AND COMPLYING WITH APPROPRIATE PHASE OF THE STORMWATER POLLUTION PREVENTION PLAN.

CIVIL ABBREVIATIONS

@	AT
∠	ANGLE
BC	BOTTOM OF CURB
ADA	AMERICANS WITH DISABILITIES ACT
BOP	BOTTOM OF PIPE
℄	CENTER LINE
CB	CATCH BASIN
CC	CONCRETE CURB
CI	CAST IRON
CONC.	CONCRETE
CP	SURVEY CONTROL POINT
Ø	DIAMETER
DMH	DRAINAGE MANHOLE
EOP	EDGE OF PAVEMENT
ERCP	ELLIPTICAL REINFORCED CONCRETE PIPE
EXIST.	EXISTING
FES	FLARED END SECTION
FOB	FACE OF BUILDING
HDPE	HIGH DENSITY POLYETHYLENE PIPE
HP	HIGH POINT ELEVATION
IE	PIPE INVERT
INV	INVERT ELEVATION
LA	LANDSCAPE
LF	LINEAR FEET
LP	LOW POINT ELEVATION
MH	MANHOLE
MIN	MINIMUM
OC	ON CENTER
OHE	OVERHEAD ELECTRIC LINE
PC	POINT OF CURVE
PI	POINT OF INTERSECTION
℗	PROPERTY LINE
POT	POINT ON TANGENT
PT	POINT OF TANGENCY
PVMT.	PAVEMENT
RCP	REINFORCED CONCRETE PIPE
SMH	SANITARY MANHOLE
TD	TRENCH DRAIN
TC	TOP OF CURB
TOP	TOP OF PIPE
TYP	TYPICAL
VGC	VERTICAL GRANITE CURB
WP	WORKING POINT

DRAFTING SYMBOLS

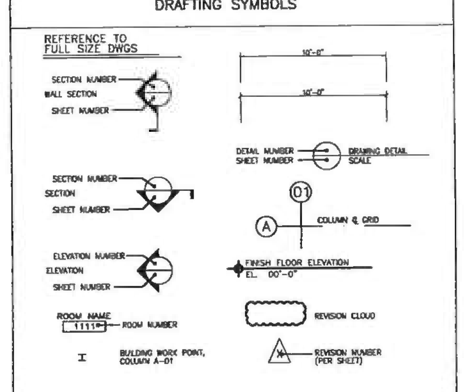

FRAMINGHAM PLANNING BOARD ENDORSEMENT

DATE OF ENDORSEMENT ____________

SANOFI

Framingham, MA

KEYPLAN

PROJECT TITLE

8NYA – ICBF
ICBF Project

CONSULTANTS

JACOBS
JACOBS ENGINEERING PROJECT NO. 63RR3101
THREE TOWER BRIDGE
TWO ASH STREET, SUITE 3000
CONSHOHOCKEN, PA 19428-2074
TEL 610-238-1000
FAX 610-238-1100

CURRENT REVISION	B
REVISION DESCRIPTION Issued for SPA	
DESIGN BY MM	REVISION DATE 11/28/2016
DRAWN BY AJW	APPROVED BY RES

REV	DATE	REVISION HISTORY	DSN	DWN	APP
B	11/28/2016	Issued for SPA	MM	AJW	RES
A	10/28/2016	Issued for Review	MM	MM	RES

CAD FILE: C-2.dwg

SANOFI PROJECT NUMBER | VENDOR JOB NUMBER: 63RR3101

SCALE: As Noted | VENDOR DRAWING NUMBER: 63RR3101/C.C00/0006

SECURITY NOTICE
SANOFI CONFIDENTIAL INFORMATION
USE PURSUANT TO COMPANY INSTRUCTIONS

SHEET TITLE
Civil
GENERAL NOTES

DOCUMENT TYPE

PRE EDMS NUMBER / REFERENCE DRAWING

DOCUMENT NUMBER
C-2

Nov 30, 2016 - 7:00am C:\TEMPO\63\63RR31XX\63RR3101\CC00\0006\B\63RR31XX_C-2.dwg Plotted By Glmbelm

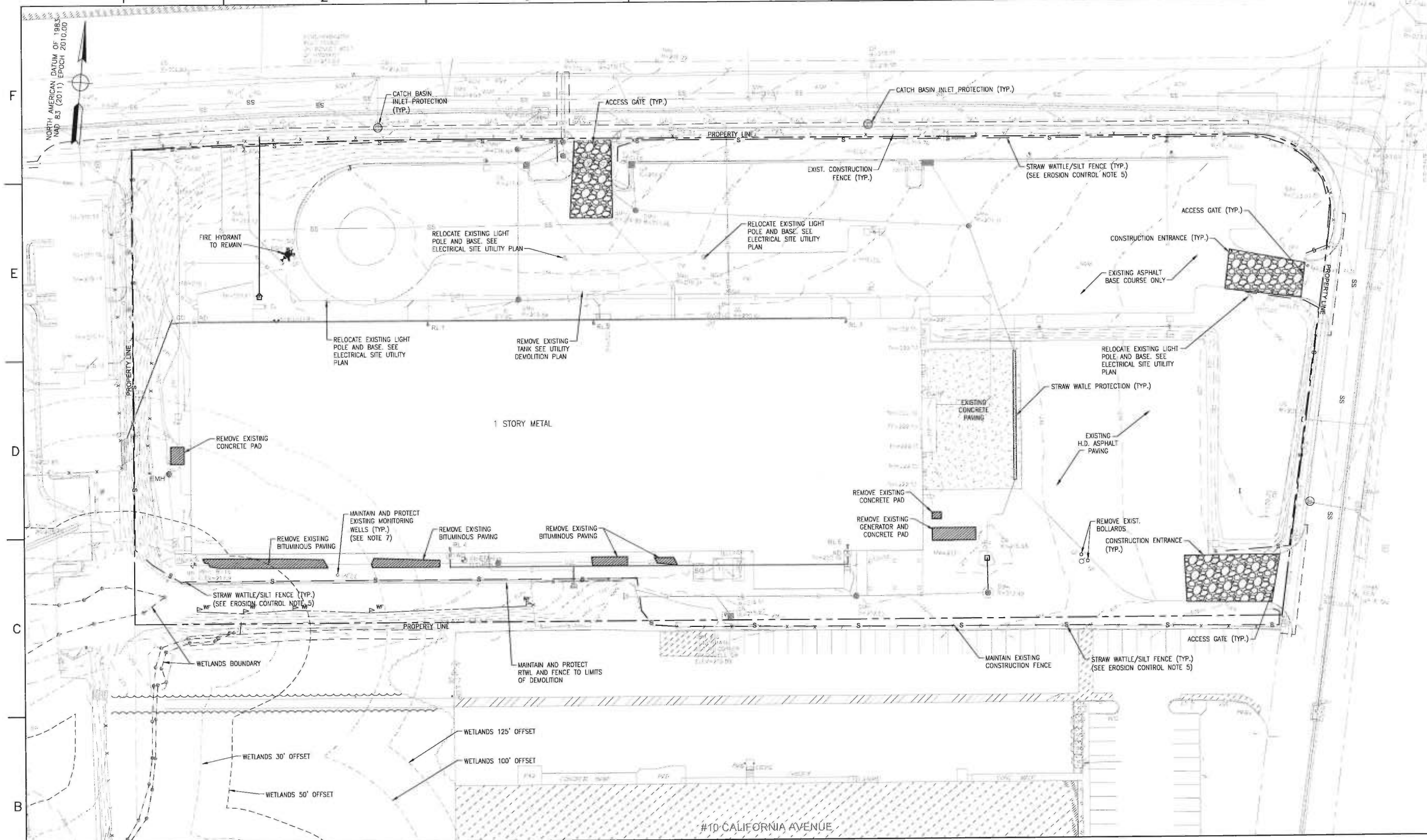

1 EXISTING CONDITIONS, DEMOLITION AND SEDIMENT CONTROL PLAN
C-3 SCALE: 1" = 30'

NOTES:

1. EXISTING EMERGENCY GENERATOR TO BE DISCONNECTED AND MOVED TO A LOCATION DESIGNATED BY SANOFI.
2. EXISTING LIGHT POLES DESIGNATED TO BE REMOVED TO BE RELOCATED 5' FROM CENTERLINE OF THE EXISTING POLE LOCATION AWAY FROM PAVED AREA.
3. SEE DRAWING C-4 "UTILITY DEMOLITION PLAN" FOR UNDERGROUND UTILITIES TO BE REMOVED.
4. SEE SEDIMENT AND EROSION CONTROL NOTES ON DWG. C-2.
5. INSTALL SILT FENCE AT THE PERIMETER OF ALL GRADING.
6. SEE SEDIMENT AND EROSION CONTROL DETAILS ON DWG. C-11.
7. CONTRACTOR SHALL MAINTAIN AND PROTECT ALL EXISTING MONITORING WELLS. WELLS SHALL BE ADJUSTED TO FINISH GRADE AS NECESSARY. ADDITIONAL LOCATION INFORMATION SHOULD BE OBTAINED DIRECTLY FROM SANOFI.

0 15' 30' 60'
1"=30'

FRAMINGHAM PLANNING BOARD ENDORSEMENT

DATE OF ENDORSEMENT

SANOFI

Framingham, MA

KEYPLAN

PROJECT TITLE
8NYA – ICBF
ICBF Project

CONSULTANTS
JACOBS
JACOBS ENGINEERING PROJECT NO. 63RR3101
THREE TOWER BRIDGE
TWO ASH STREET, SUITE 3000
CONSHOHOCKEN, PA. 19428-2074
TEL. 610-239-1000
FAX. 610-239-1100

CURRENT REVISION	B
REVISION DESCRIPTION	Issued for SPA
DESIGN BY: MM	REVISION DATE: 11/28/2016
DRAWN BY: AJW	APPROVED BY: RES

REV	DATE	REVISION HISTORY	DSN	DWN	APP
B	11/28/2016	Issued for SPA	MM	AJW	RES
A	10/28/2016	Issued for Review	MM	MM	RES

CAD FILE
C-3.dwg

SANOFI PROJECT NUMBER

VENDOR JOB NUMBER
63RR3101

SCALE
1"=30'

VENDOR DRAWING NUMBER
63RR3101/C.C01/0003

SECURITY NOTICE
SANOFI CONFIDENTIAL INFORMATION
USE PURSUANT TO COMPANY INSTRUCTIONS

SHEET TITLE
Civil
EXISTING CONDITIONS, DEMOLITION AND SEDIMENT CONTROL PLAN

DOCUMENT TYPE

PRE EDMS NUMBER / REFERENCE DRAWING

DOCUMENT NUMBER
C-3

Nov 30, 2016 - 7:00am C:\Users\PW\DESKTOP\63RR3101\63RR3101XX\63RR3101XX\C01\DOCS\63RR3101XX_C-3.dwg Plotted by Gimbelm

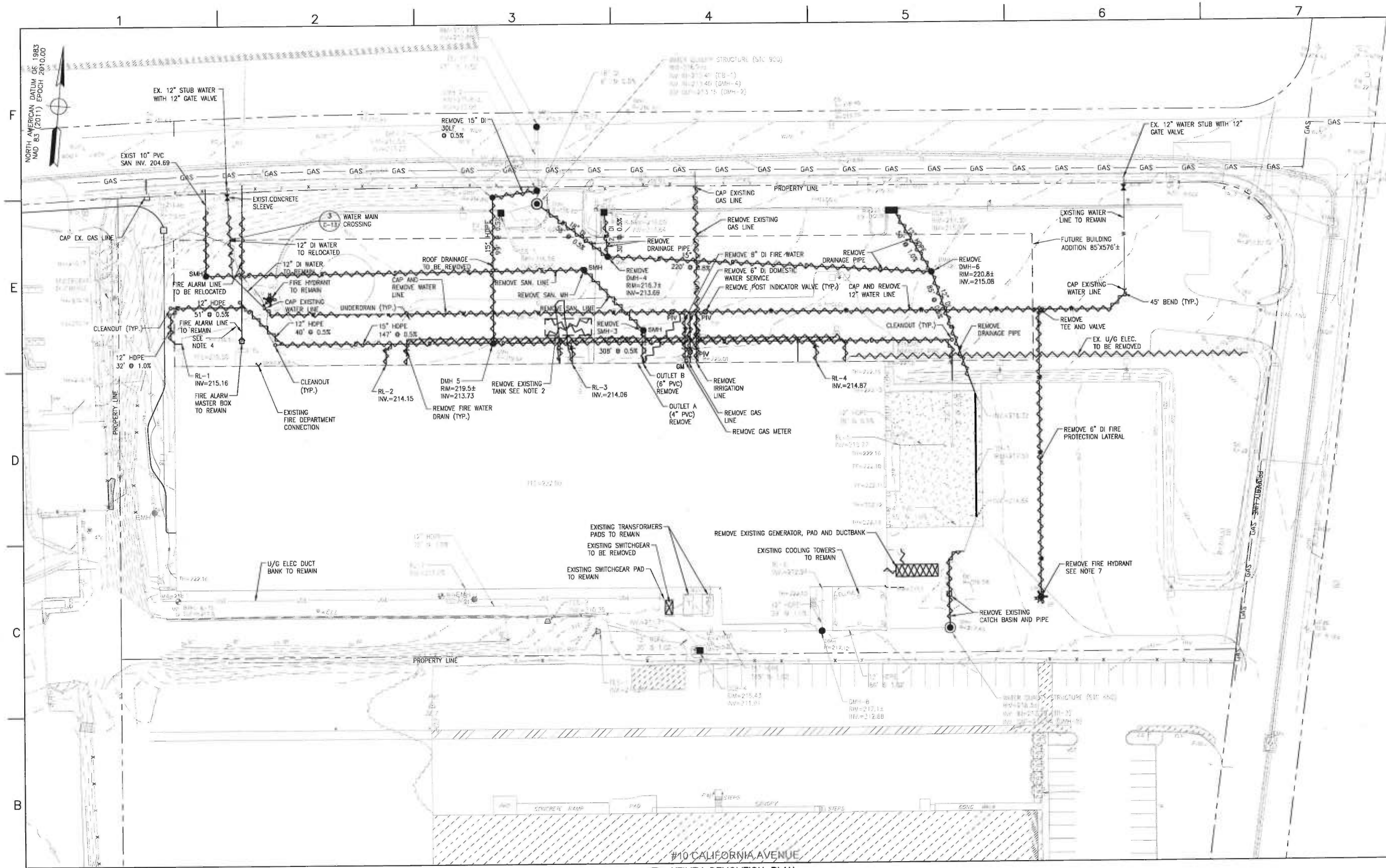

1 C-4 UTILITY DEMOLITION PLAN
SCALE: 1" = 30'-0"

NOTES:

1. REFERENCE GENERAL NOTES ON DRAWING C2.
2. EXISTING 2500 GALLON UNDERGROUND TANK TO BE DISCONNECTED FROM DRAINAGE PIPING, CONTROL WIRING, AND POWER. TANK TO BE EXCAVATED AND SALVAGED FOR REUSE ON SITE. REMOVE TANK, CONCRETE DEADMEN ANCHORS, SENSORS, AND CONTROLS. SEE UTILITY PLAN FOR NEW LOCATION DRAWING C7.
3. COORDINATE ALL UNDERGROUND UTILITY DEMOLITION WITH AUTHORITY HAVING JURISDICTION.
4. CAP ALL UNDERGROUND WATERLINES AS INDICATED. ALL CAPS TO BE PROVIDED WITH THRUST BLOCKS.
5. COORDINATE THE UNDERGROUND DEMOLITION WITH THE INSTALLATION OF NEW UTILITIES.
6. EXISTING ASPHALT REMOVED DURING TRENCHING OF NEW UTILITIES TO BE REPAIRED IN ACCORDANCE WITH THE NEW PAVING SECTION / DETAILS. EXISTING PAVING TO BE REPAIRED TO TOP OF BASE ASPHALT. NEW PAVING TO BE INSTALLED AFTER ALL UNDERGROUND UTILITIES HAVE BEEN INSTALLED AND READY FOR SERVICE.
7. EXISTING FIRE HYDRANT TO BE REMOVED AND SALVAGED FOR REUSE. SEE DRAWING C7 FOR NEW LOCATIONS.

LEGEND:

UTILITY LINES TO BE REMOVED

FRAMINGHAM PLANNING BOARD ENDORSEMENT

DATE OF ENDORSEMENT

0 15' 30' 60'
1"=30'-0"

SANOFI

Framingham, MA

KEYPLAN

PROJECT TITLE
BNYA – ICBF
ICBF Project

CONSULTANTS
JACOBS
THREE TOWER BRIDGE
TWO ASHBY STREET, SUITE 3000
CONSHOHOCKEN, PA. 19428-2074
TEL. 610-235-7000
FAX. 610-228-1100
JACOBS ENGINEERING PROJECT NO. 63RR3101

CURRENT REVISION	B
REVISION DESCRIPTION	Issued for SPA
DESIGN BY: MM	REVISION DATE: 11/28/2016
DRAWN BY: AJW	APPROVED BY: RES

REV	DATE	REVISION HISTORY	DSN	DRN	APP
B	11/28/2016	Issued for SPA	MM	AJW	RES
A	10/28/2016	Issued for Review	MM	MM	RES

CAD FILE: C-4.dwg

SANOFI PROJECT NUMBER

VENDOR JOB NUMBER: 63RR3101

SCALE: 1"=30'

VENDOR DRAWING NUMBER: 63RR3101/C.C01/0004

SECURITY NOTICE
SANOFI CONFIDENTIAL INFORMATION
USE PURSUANT TO COMPANY INSTRUCTIONS

SHEET TITLE
Civil
UTILITY DEMOLITION PLAN

DOCUMENT TYPE

PRE EDMS NUMBER / REFERENCE DRAWING

DOCUMENT NUMBER
C-4

Nov 30, 2016 - 7:01am C:\USERS\MMCKEN\DESKTOP\63RR3101XX\63RR3101XX\63RR3101 C.C01\0004\63RR3101XX_C-4.dwg Plotted by: Cimbelm

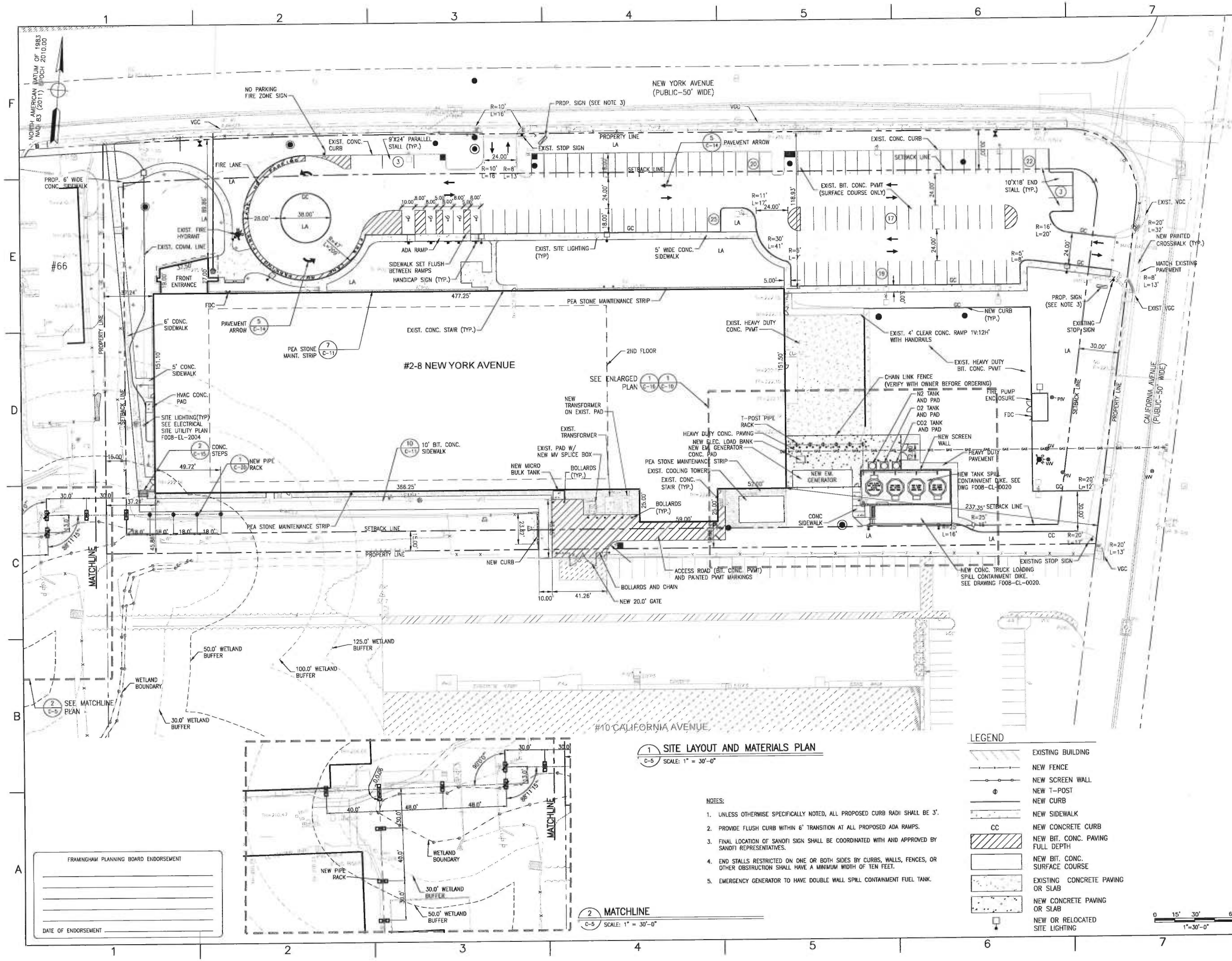

1 SITE LAYOUT AND MATERIALS PLAN
C-5 SCALE: 1" = 30'-0"

2 MATCHLINE
C-5 SCALE: 1" = 30'-0"

NOTES:

1. UNLESS OTHERWISE SPECIFICALLY NOTED, ALL PROPOSED CURB RADII SHALL BE 3'.
2. PROVIDE FLUSH CURB WITHIN 6' TRANSITION AT ALL PROPOSED ADA RAMPS.
3. FINAL LOCATION OF SANOFI SIGN SHALL BE COORDINATED WITH AND APPROVED BY SANOFI REPRESENTATIVES.
4. END STALLS RESTRICTED ON ONE OR BOTH SIDES BY CURBS, WALLS, FENCES, OR OTHER OBSTRUCTION SHALL HAVE A MINIMUM WIDTH OF TEN FEET.
5. EMERGENCY GENERATOR TO HAVE DOUBLE WALL SPILL CONTAINMENT FUEL TANK.

LEGEND

- EXISTING BUILDING
- NEW FENCE
- NEW SCREEN WALL
- NEW T-POST
- NEW CURB
- NEW SIDEWALK
- CC NEW CONCRETE CURB
- NEW BIT. CONC. PAVING FULL DEPTH
- NEW BIT. CONC. SURFACE COURSE
- EXISTING CONCRETE PAVING OR SLAB
- NEW CONCRETE PAVING OR SLAB
- NEW OR RELOCATED SITE LIGHTING

0 15' 30' 60'
1"=30'-0"

FRAMINGHAM PLANNING BOARD ENDORSEMENT

DATE OF ENDORSEMENT

SANOFI

Framingham, MA

KEYPLAN

PROJECT TITLE
8NYA – ICBF
ICBF Project

CONSULTANTS
JACOBS
JACOBS ENGINEERING PROJECT NO. 63RR3101
THREE TOWER BRIDGE
TWO ASH STREET, SUITE 3000
CONSHOHOCKEN, PA 19428-2074
TEL. 610-239-1020
FAX. 610-239-1100

CURRENT REVISION	B
REVISION DESCRIPTION	Issued for SPA
DESIGN BY	MM
REVISION DATE	11/28/2016
DRAWN BY	AJW
APPROVED BY	RES

REV	DATE	REVISION HISTORY	DSN	DRN	APP
B	11/28/2016	Issued for SPA	MM	AJW	RES
A	10/28/2016	Issued for Review	MM	MM	RES

CAD FILE
C-5.dwg

SANOFI PROJECT NUMBER	VENDOR JOB NUMBER
	63RR3101
SCALE	VENDOR DRAWING NUMBER
As Noted	63RR3101/C.C02/0006

SECURITY NOTICE
SANOFI CONFIDENTIAL INFORMATION
USE PURSUANT TO COMPANY INSTRUCTIONS

SHEET TITLE
Civil
SITE LAYOUT AND MATERIALS PLAN

DOCUMENT TYPE

PRE EDMS NUMBER / REFERENCE DRAWING

DOCUMENT NUMBER
C-5

Nov 30, 2016 - 7:01am C:\Users\AJW\63RR3101\C.C02\0006\63RR3101XX_C-5.dwg Plotted by jimbolm

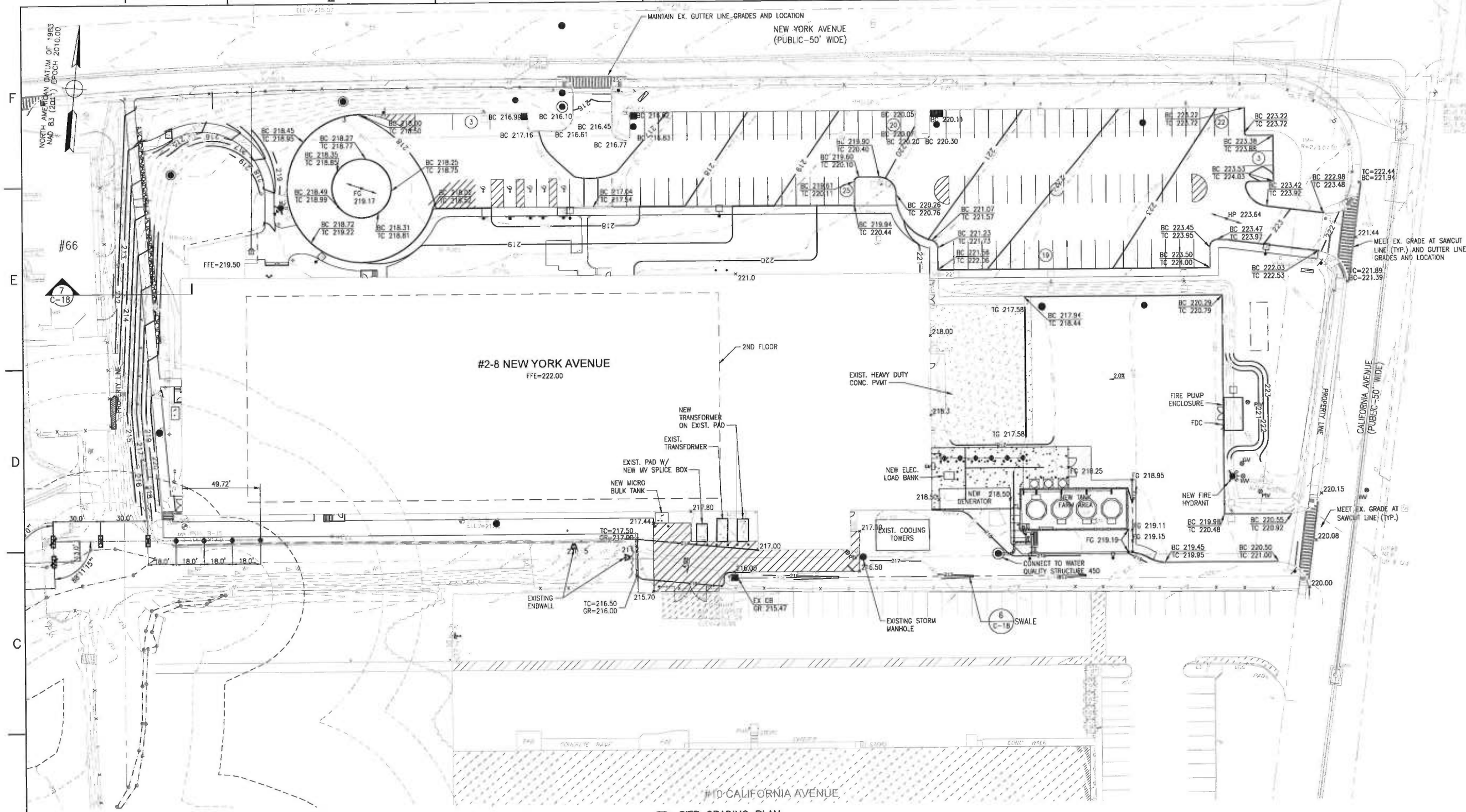

1 C-6 SITE GRADING PLAN
SCALE: 1" = 30'-0"

LEGEND

223	PROPOSED CONTOUR
223	EXISTING CONTOUR
BC 219.98	BOTTOM OF CURB ELEVATION
TC 220.48	TOP OF CURB ELEVATION
TG-218.25	TOP OF GRATE ELEVATION
FG 219.17	FINISHED GRADE ELEVATION
	NEW CURB
	NEW SIDEWALK
CC	NEW CONCRETE CURB
	NEW BIT. CONC. PAVING FULL DEPTH
	NEW BIT. CONC. SURFACE COURSE

0 15' 30' 60'
1"=30'-0"

FRAMINGHAM PLANNING BOARD ENDORSEMENT

DATE OF ENDORSEMENT

SANOFI

Framingham, MA

KEYPLAN

PROJECT TITLE
BNYA – ICBF
ICBF Project

CONSULTANTS
JACOBS
THREE TOWER BRIDGE
TWO ASH STREET, SUITE 3000
CONSHOHOCKEN, PA 19428-2974
TEL. 610-238-1000
FAX. 610-238-1100
JACOBS ENGINEERING PROJECT NO. 63RR3101

CURRENT REVISION	B
REVISION DESCRIPTION	Issued for SPA
DESIGN BY: MM	REVISION DATE: 11/28/2016
DRAWN BY: AJW	APPROVED BY: RES

REV	DATE	REVISION HISTORY	DSN	DWN	APP
B	11/28/2016	Issued for SPA	MM	AJW	RES
A	10/28/2016	Issued for Review	MM	MM	RES

CAD FILE: C-6.dwg

SANOFI PROJECT NUMBER	VENDOR JOB NUMBER: 63RR3101
SCALE: 1"=30'	VENDOR DRAWING NUMBER: 63RR3101/C.C03/0003

SECURITY NOTICE
SANOFI CONFIDENTIAL INFORMATION
USE PURSUANT TO COMPANY INSTRUCTIONS

SHEET TITLE
Civil
GRADING AND DRAINAGE PLAN

DOCUMENT TYPE

PRE EDMS NUMBER / REFERENCE DRAWING

DOCUMENT NUMBER
C-6

Nov 30, 2016 - 7:02am C:\Users\AJWOLE\AppData\Local\Temp\AcPublish_6164\63RR3101\XX\63RR3101XX_C-6.dwg Plotted by Zimbelm

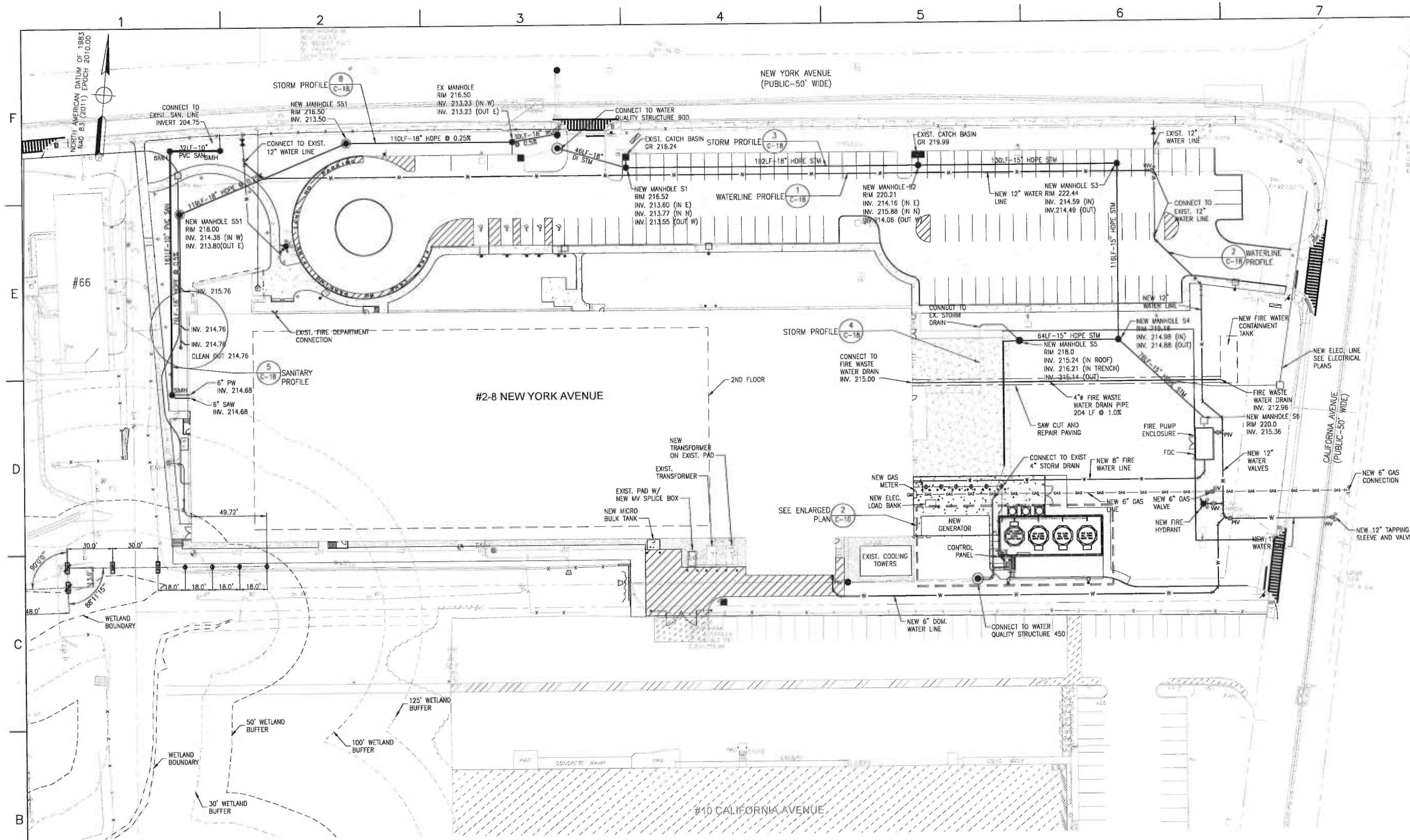

1 C-7 UTILITY PLAN

SCALE: 1" = 30'-0"

TRUCK LOADING/UNLOADING NOTES:

1. OUTSIDE TANK FARM CONTAINED AREA WILL ALLOW FOR RAIN WATER DRAINAGE DURING NORMAL CONDITIONS. WHEN A TANK TECHNICIAN EITHER FILLS A TANK IN THE PIT OR EMPTIES A TANK IN THE PIT HE WILL CLOSE THE PIT DRAIN VALVE FROM THE LOCAL PANEL. THIS ENSURES THAT IF THERE IS A HOSE RUPTURE OR DISCONNECT THAT THE WASTE OR PRODUCT DOES NOT FLOW TO DRAIN.

2. WHEN THE TECHNICIAN IS COMPLETE WITH HIS TASK HE WILL OPEN THE DRAIN VALVE FROM THE CONTROL PANEL. THE VALVE BEING LEFT OPEN IS THE INTENDED NORMAL POSITION FOR RAINWATER DRAINAGE.

NOTES:

1. SAW CUT AND REMOVE EXISTING HEAVY DUTY PAVEMENT FOR UTILITY TRENCHING. REPLACE WITH HEAVY DUTY PAVEMENT.

FRAMINGHAM PLANNING BOARD ENDORSEMENT

DATE OF ENDORSEMENT

0 15' 30' 60'
1"=30'-0"

SANOFI

Framingham, MA

KEYPLAN

PROJECT TITLE

BNYA – ICBF
ICBF Project

CONSULTANTS

JACOBS

JACOBS ENGINEERING PROJECT NO. 63RR3101

THREE TOWER BRIDGE
700 ALL ASH STREET, SUITE 3000
CONSHOHOCKEN, PA. 19428-2074
TEL. 610-234-1000
FAX. 610-234-1100

CURRENT REVISION	B
REVISION DESCRIPTION	Issued for SPA
DESIGN BY: MM	REVISION DATE: 11/28/2016
DRAWN BY: AJW	APPROVED BY: RES

REV	DATE	REVISION HISTORY	DSN	DWN	APP
B	11/28/2016	Issued for SPA	MM	AJW	RES
A	10/28/2016	Issued for Review	MM	MM	RES

CAD FILE: C–7.dwg

SANOFI PROJECT NUMBER	VENDOR JOB NUMBER
	63RR3101
SCALE: As Noted	VENDOR DRAWING NUMBER: 63RR3101/C.C04/0003

SECURITY NOTICE

SANOFI CONFIDENTIAL INFORMATION
USE PURSUANT TO COMPANY INSTRUCTIONS

SHEET TITLE

Civil
UTILITY PLAN

DOCUMENT TYPE

PFE EDMS NUMBER / REFERENCE DRAWING

DOCUMENT NUMBER

C–7

Nov 30, 2016 - 7:02am C:\SPACE\WORK\63RR3101\CC\0000\63RR3101_C-7.dwg Plotted by jimbolm

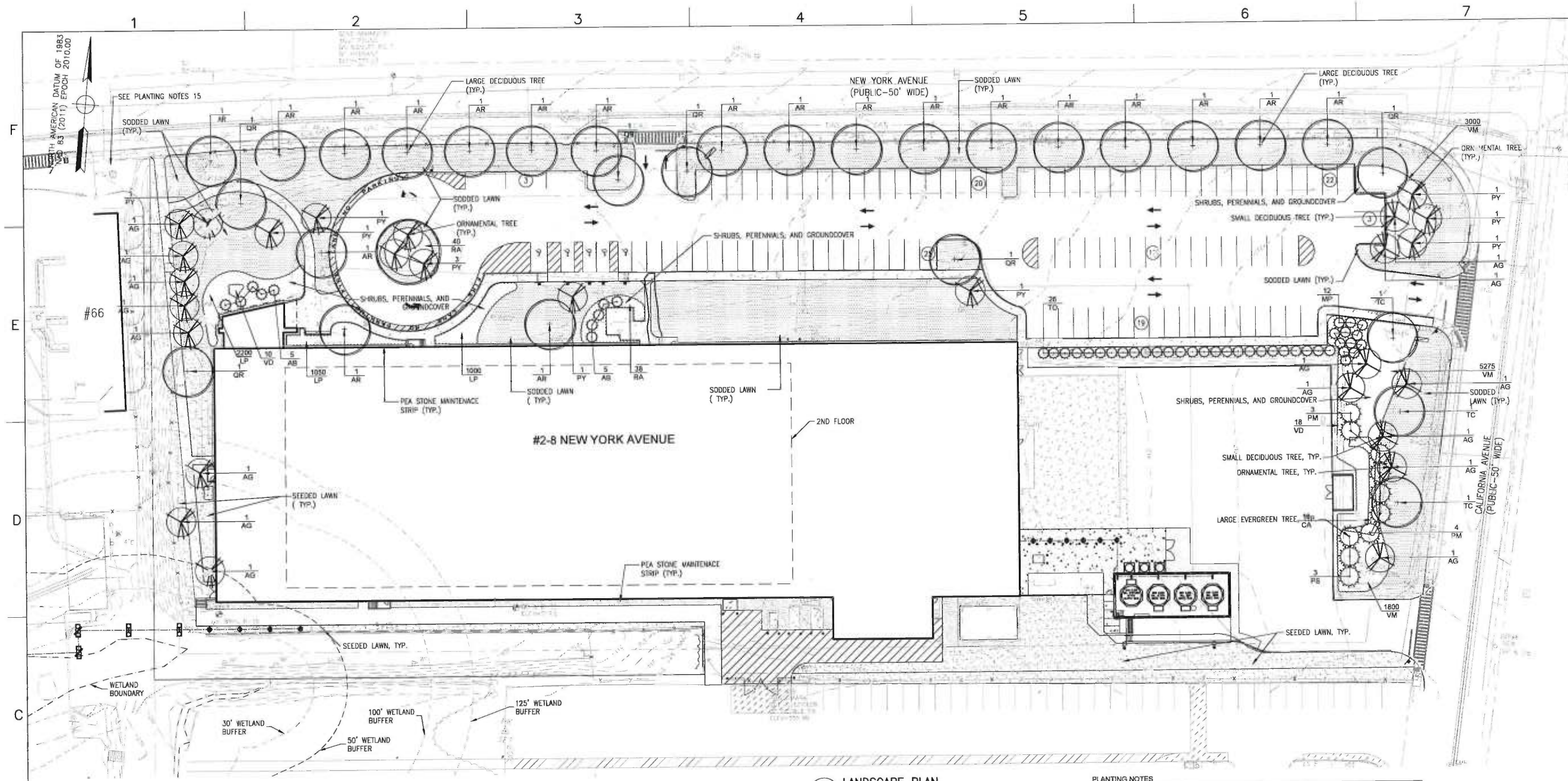

1 LANDSCAPE PLAN
C-8 SCALE: 1" = 30'-0"

PLANTING LEGEND

- DECIDUOUS TREE (2 1/2"-3" CALIPER)
- FLOWERING TREE
- EVERGREEN TREE 8'
- EVERGREEN TREE
- SHRUBS, PERENNIALS, AND GROUNDCOVER
- SEEDED LAWN
- SODDED LAWN

FRAMINGHAM PLANNING BOARD ENDORSEMENT

DATE OF ENDORSEMENT _____

PLANT SCHEDULE

SYM	QTY	BOTANICAL NAME	COMMON NAME	SIZE	POOT	SPACING	COMMENTS
DECIDUOUS TREE							
AR	20	ACER RUBRUM	RED MAPLE	2 1/2" - 3" CAL.	B&B	40'-0"	UNIFORM
TC	3	TILIA CORDATA	LITTLELEAF LINDEN	2 1/2" - 3" CAL	B&B	AS SHOWN ON PLANS	UNIFORM
QR	6	QUERCUS RUBRA	RED OAK	2 1/2" - 3" CAL	B&B	AS SHOWN ON PLANS	UNIFORM
SMALL/COMPACT FLOWERING DECIDUOUS TREE							
AG	15	ACER GINNALA	AMUR MAPLE	8 - 9 FT.	B&B	AS SHOWN ON PLANS	MULTISTEM
AB	15	AMELANCHIER ARBOREA	SERVICETREE	8 - 9 FT.	B&B	10'-0"	MULTISTEM
PY	10	PRUNUS X YEDOENSIS	YOSHINO CHERRY	1 1/2" - 2" CAL	B&B	AS SHOWN ON PLANS	UNIFORM
EVERGREEN TREE							
PM	7	PSEUDOTSUGA MENZIESII	DOUGLAS FIR	8 - 9 FT.	B&B	15'-0"	
PS	3	PINUS STROBUS	WHITE PINE	8 - 9 FT.	B&B	15'-0"	
TO	26	THUJA OCCIDENTALIS	ARBORVITAE	8 - 9 FT.	B&B	6'-0"	
SHRUBS							
CA	10	CLETHERA ALNIFOLIA	SWEET PEPPERBUSH	24" - 30"	B&B	5'-0"	
MP	12	MYRICA PENNSYLVANICA	NORTHERN BAYBERRY	24" - 30"	B&B	5'-0"	
RA	78	RHUS AROMATICA 'GRO-LOW'	FRAGRANT SUMAC	18" - 24"	B&B	5'-0"	
VD	36	VIBURNUM DENTATUM	ARROWWOOD VIBURNUM	24" - 30"	B&B	5'-0"	
GROUNDCOVER							
VM	10175	VINCA MINOR	PERIWINKLE	1 YR	BARE ROOT	9"	
LE	4650	LIRIOPE SPICATA	CREEPING LILY TURF	1 YR	BARE ROOT	9"	

PLANTING NOTES

1. SPRAY IRRIGATION TO BE INSTALLED IN ALL SODDED LAWN AREAS AND DRIP IRRIGATION TO BE INSTALLED IN ALL SHRUB/ PERENNIAL/ GROUNDOVER BEDS.
2. NEW PLANT MATERIAL SHALL CONFORM TO THE MINIMUM GUIDELINES ESTABLISHED FOR NURSERY STOCK PUBLISHED BY THE AMERICAN ASSOC. OF NURSERYMEN, INC. IN ADDITION, NEW PLANT MATERIAL FOR THE PROJECT SHALL BE OF SPECIMEN QUALITY.
3. NEW PLANTS TO BE BALLED AND BURLAPPED OR CONTAINER-GROWN, UNLESS OTHERWISE NOTED ON THE PLANT LIST.
4. SUPPLY ALL NEW PLANT MATERIAL IN QUANTITIES SUFFICIENT TO COMPLETE THE PLANTING SHOWN ON THE DRAWINGS.
5. PROPOSED SUBSTITUTIONS OF PLANT SPECIES SHALL BE MADE WITH PLANTS OF EQUIVALENT OVERALL FORM, HEIGHT, BRANCHING HABIT, FLOWER, LEAF, COLOR, FRUIT AND CULTURE.
6. PLANTS SHALL BE TAGGED AND APPROVED BY THE LANDSCAPE ARCHITECT AT THE NURSERY PRIOR TO DIGGING OR DELIVERY TO THE SITE.
7. LOCATE AND VERIFY EXISTING UTILITY LINES PRIOR TO PLANTING AND REPORT CONFLICTS TO THE ARCHITECT.
8. DO NOT PLANT TREES BEFORE ROUGH GRADING HAS BEEN ACCEPTED.
9. TREES SHALL BEAR THE SAME RELATIONSHIP TO GRADE AS THEY BORE TO PREVIOUS GRADE.
10. STAKE LOCATION OF PROPOSED PLANTING FOR APPROVAL BY THE LANDSCAPE ARCHITECT PRIOR TO THE COMMENCEMENT OF PLANTING.
11. PREPARE SHRUB PLANTING BEDS TO A MINIMUM DEPTH OF EIGHTEEN INCHES (18") WITH LOAM. ALL PLANT BEDS AND INDIVIDUAL TREE PITS SHALL RECEIVE THREE INCHES (3") OF BARK MULCH.
12. LANDSCAPE CONTRACTOR SHALL BE RESPONSIBLE FOR REPLACING ALL DAMAGED, STOLEN, DEAD, DECLINING OR LOST MATERIAL UNTIL COMPLETION OF MAINTENANCE PERIODS OR GUARANTEE PERIODS.
13. AREAS TO BE SEEDED OR SODDED SHALL RECEIVE SIX INCHES (6") OF LOAM, MEASURED AFTER COMPACTION, PRIOR TO SEEDING.
14. EXISTING LAWN AREAS DESIGNATED TO REMAIN SHALL BE AERATED, FERTILIZED AND OVERSEEDED.
15. IN ADDITION TO LOCATIONS DEFINED FOR SEED ON THE PLANTING PLAN, ALSO SEED GRASS AREAS WHICH HAVE BEEN DISTURBED BY THE CONSTRUCTION.

0 15' 30' 60'
1"=30'-0"

SANOFI

Framingham, MA

KEYPLAN

PROJECT TITLE
BNYA – ICBF
ICBF Project

CONSULTANTS
JACOBS
THREE TOWER BRIDGE
TWO ASH STREET, SUITE 3000
CONSHOHOCKEN, PA 19428-2074
TEL 610-239-1200
FAX 610-239-1100
JACOBS ENGINEERING PROJECT NO. 63RR3101

CURRENT REVISION: B
REVISION DESCRIPTION: Issued for SPA
DESIGN BY: MM
REVISION DATE: 11/28/2016
DRAWN BY: AJW
APPROVED BY: RES

REV	DATE	REVISION HISTORY	DSN	DWN	APP
B	11/28/2016	Issued for SPA	MM	AJW	RES
A	10/28/2016	Issued for Review	MM	MM	RES

CAD FILE: C-8.dwg
SANOFI PROJECT NUMBER:
VENDOR JOB NUMBER: 63RR3101
SCALE: 1"=30'
VENDOR DRAWING NUMBER: 63RR3101/C.C06/0003

SECURITY NOTICE
SANOFI CONFIDENTIAL INFORMATION
USE PURSUANT TO COMPANY INSTRUCTIONS

SHEET TITLE
Civil
LANDSCAPE PLAN

DOCUMENT TYPE

PRE EDMS NUMBER / REFERENCE DRAWING

DOCUMENT NUMBER
C-8

Nov 30, 2016 - 7:04am C:\Users\POKEDS\Desktop\63RR3101\CC06\0003\63RR3101_C-8.dwg Plotted by grimbeim

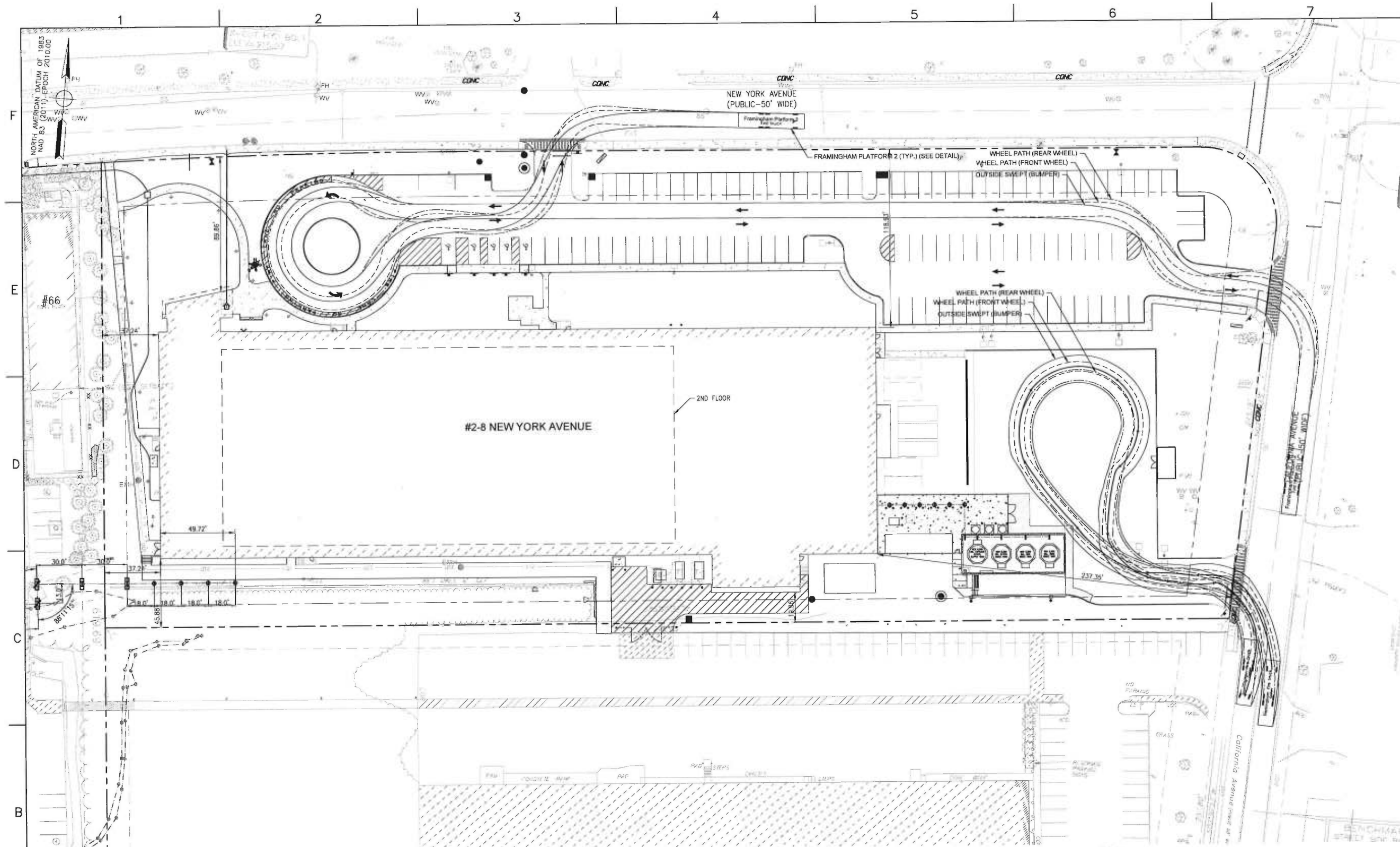

1 FIRE TRUCK ACCESS PLAN
C-9 SCALE: 1" = 30'-0"

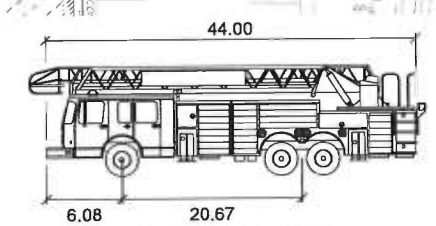

Framingham Platform 2

		feet
Width	:	10.00
Track	:	10.00
Lock to Lock Time	:	6.0
Steering Angle	:	33.0

2 FIRE TRUCK DETAIL
C-9 SCALE: 1" = 10'-0"

0 15' 30' 60'
1"=30'-0"

FRAMINGHAM PLANNING BOARD ENDORSEMENT

DATE OF ENDORSEMENT _____

SANOFI

Framingham, MA

KEYPLAN

PROJECT TITLE
BNYA – ICBF
ICBF Project

CONSULTANTS
JACOBS
THREE TOWER BRIDGE
TWO ASH STREET, SUITE 3000
CONSHOHOCKEN, PA 19428-2074
TEL 610-251-1000
FAX 610-238-1120
JACOBS ENGINEERING PROJECT NO. 63RR3101

CURRENT REVISION	B	
REVISION DESCRIPTION	Issued for SPA	
DESIGN BY	MM	REVISION DATE 11/28/2016
DRAWN BY	AJW	APPROVED BY RES

REV	DATE	REVISION HISTORY	DSN	DRN	APP
B	11/28/2016	Issued for SPA	MM	AJW	RES
A	10/28/2016	Issued for Review	MM	MM	RES

CAD FILE
C-9.dwg

SANOFI PROJECT NUMBER	VENDOR JOB NUMBER 63RR3101
SCALE As Noted	VENDOR DRAWING NUMBER 63RR3101/C.C02/0012

SECURITY NOTICE
SANOFI CONFIDENTIAL INFORMATION
USE PURSUANT TO COMPANY INSTRUCTIONS

SHEET TITLE
Civil
FIRE TRUCK ACCESS PLAN

DOCUMENT TYPE

PRE EDMS NUMBER / REFERENCE DRAWING

DOCUMENT NUMBER
C-9

Nov 30, 2016 - 7:04am C:\SYNOPOS\63RR3101XX\63RR3101\C\C02\0012\63RR3101X_C-9.dwg Plotted by jimbeim

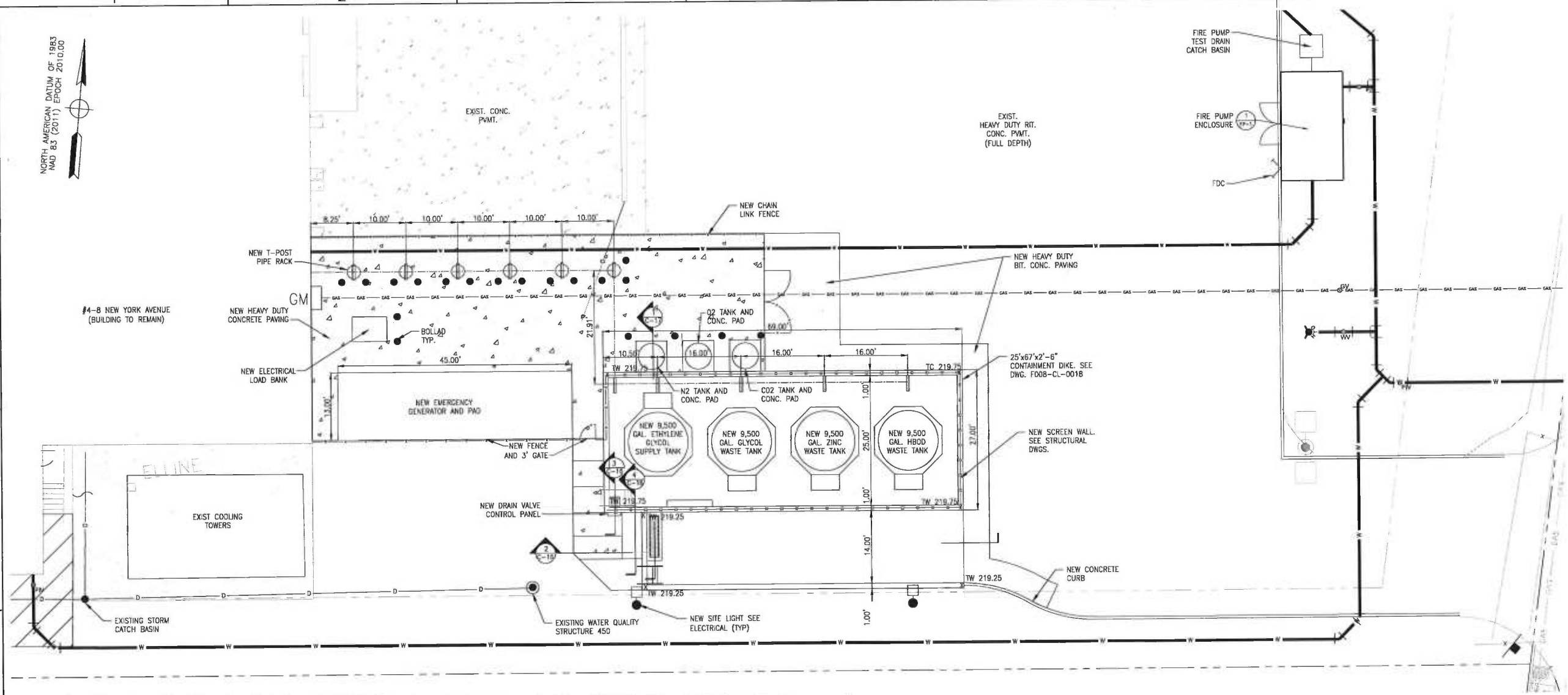

1 ENLARGED PLAN
C-10 SCALE: 1" = 10'-0"

NOTES:

1. REFERENCE DRAWING C-16 FOR SPILL CONTAINMENT UTILITY PLAN.
2. EMERGENCY GENERATOR TO HAVE DOUBLE WALL SPILL CONTAINMENT FUEL TANK.

LEGEND

- EXISTING BUILDING
- NEW FENCE
- NEW SCREEN WALL
- NEW T-POST
- NEW CURB
- NEW SIDEWALK
- CC NEW CONCRETE CURB
- NEW BIT. CONC. PAVING FULL DEPTH
- NEW BIT. CONC. SURFACE COURSE
- EXISTING CONCRETE PAVING OR SLAB
- NEW CONCRETE PAVING OR SLAB
- NEW OR RELOCATED SITE LIGHTING

0 5' 10' 20'
1"=10'-0"

FRAMINGHAM PLANNING BOARD ENDORSEMENT

DATE OF ENDORSEMENT

SANOFI

Framingham, MA

KEYPLAN

PROJECT TITLE
8NYA – ICBF
ICBF Project

CONSULTANTS
JACOBS
THREE TOWER BRIDGE
TWO ASH STREET, SUITE 3000
CONSHOHOCKEN, PA. 19428-2074
TEL. 610-334-1000
FAX. 610-334-1100
JACOBS ENGINEERING PROJECT NO. 63RR3101

CURRENT REVISION	B
REVISION DESCRIPTION	Issued for SPA
DESIGN BY: MM	REVISION DATE: 11/28/2016
DRAWN BY: AJW	APPROVED BY: RES

REV	DATE	REVISION HISTORY	DSN	DRN	APP
B	11/28/2016	Issued for SPA	MM	AJW	RES
A	10/28/2016	Issued for Review	MM	MM	RES

CAD FILE
C-10.dwg

SANOFI PROJECT NUMBER

VENDOR JOB NUMBER
63RR3101

SCALE
As Noted

VENDOR DRAWING NUMBER
63RR3101/C.C02/0007

SECURITY NOTICE
SANOFI CONFIDENTIAL INFORMATION
USE PURSUANT TO COMPANY INSTRUCTIONS

SHEET TITLE
Civil
TANK FARM ENLARGED PLAN

DOCUMENT TYPE

PRE EDMS NUMBER / REFERENCE DRAWING

DOCUMENT NUMBER
C-10

Nov 30, 2016 - 7:01am C:\Users\jacobs\Desktop\63RR3101\C.C02\0007\8NYA\63RR3101XX_C-10.dwg Polline Gimbelm

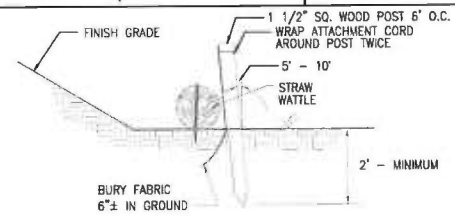

NOTES:
1. STRAW WATTLES SHALL BE INSTALLED ON CONTOUR AND STAKED WITH 18 OR 24 INCH WOOD STAKES AT FOUR FEET ON CENTER
2. ACCUMULATED SEDIMENT SHALL BE REMOVED WHEN IT REACHES 3/4 OF ROLL HEIGHT

1 STRAW WATTLE / SILT FENCE DETAIL
C-11 N.T.S.

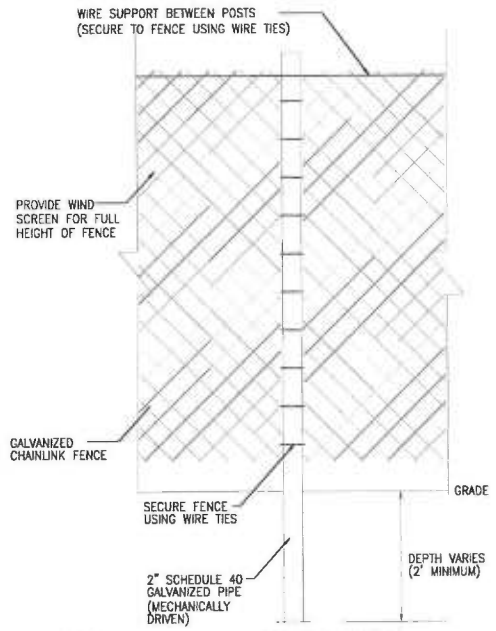

NOTES:
1. CONTRACTOR MAINTAIN EXISTING FENCE, GATES AND ALL HARDWARE AS REQUIRED.

5 CONSTRUCTION FENCE
C-11 N.T.S.

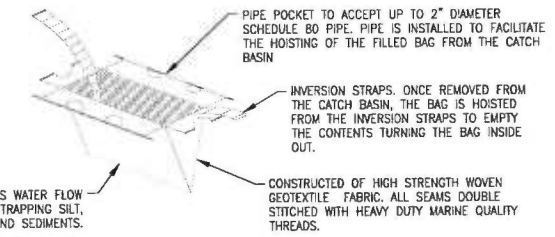

NOTES:
1. PRODUCT TO BE "SILT SACK" MANUFACTURED BY REED AND GRAHAM, INC. SACRAMENTO, CA, OR APPROVED EQUAL.

2 SILT SACK (INLET PROTECTION)
C-11 N.T.S.

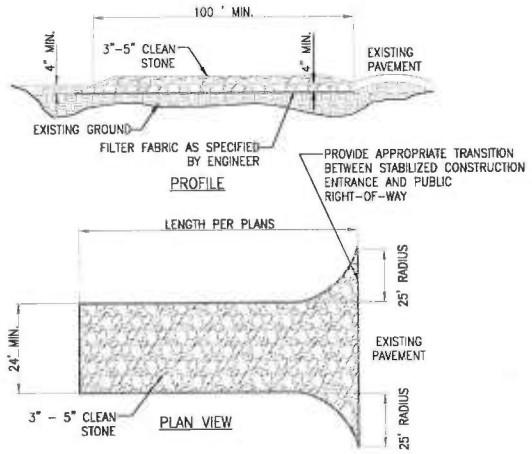

NOTES:
1. STONE SHALL BE COARSE AGGREGATE (3"–5").
2. THICKNESS OF STONE SHALL BE NO LESS THAN 8" IN DEPTH FROM GRADE.
3. THE ENTRANCE SHALL BE MAINTAINED IN A CONDITION WHICH WILL PREVENT TRACKING OR FLOWING OF SEDIMENT ONTO THE PUBLIC RIGHT-OF-WAY.

6 STABILIZED CONSTRUCTION ENTRANCE
C-11 N.T.S.

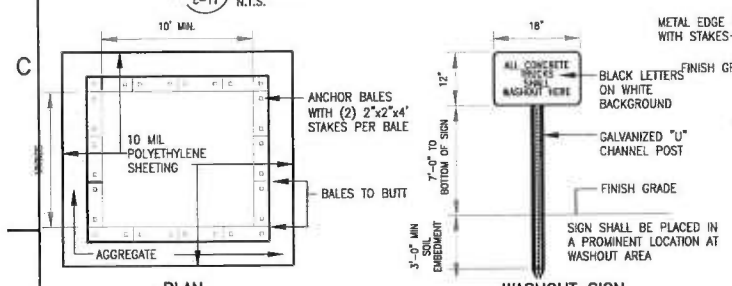

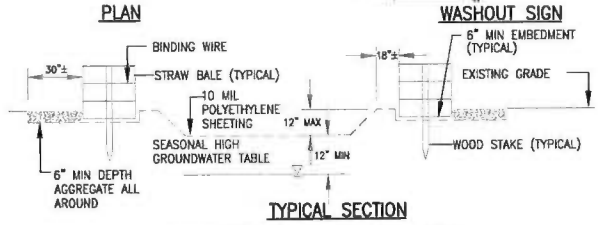

12 CONCRETE WASHOUT AREA
C-11 N.T.S.

NOTES:
1. CONTAINMENT MUST BE STRUCTURALLY SOUND AND LEAK FREE AND CONTAIN ALL LIQUID WASTES.
2. CONTAINMENT DEVICES MUST BE OF SUFFICIENT QUANTITY OR VOLUME TO COMPLETELY CONTAIN THE LIQUID WASTES GENERATED.
3. WASHOUT MUST BE CLEANED OR NEW FACILITIES CONSTRUCTED AND READY TO USE ONCE WASHOUT IS 75% FULL.
4. WASHOUT AREA(S) SHALL BE INSTALLED IN A LOCATION EASILY ACCESSIBLE BY CONCRETE TRUCKS.
5. ONE OR MORE AREAS MAY BE INSTALLED ON THE CONSTRUCTION SITE AND MAY BE RELOCATED AS CONSTRUCTION PROGRESSES.
6. AT LEAST WEEKLY REMOVE ACCUMULATION OF SAND AND AGGREGATE AND DISPOSE OF PROPERLY.

FRAMINGHAM PLANNING BOARD ENDORSEMENT

DATE OF ENDORSEMENT

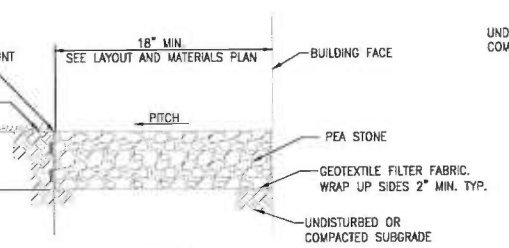

7 PEA STONE MAINTENANANCE STRIP
C-11 N.T.S.

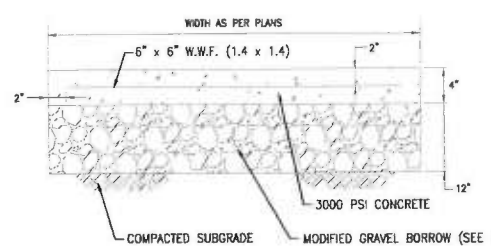

NOTE:
1. CONSTRUCTION JOINTS ARE TO BE AT 6' INTERVALS
2. MODIFIED GRAVEL BORROW SHALL MEET THE PROJECT SPECIFICATIONS FOR "GRAVEL BORROW" WITH THE EXCEPTION OF MATERIAL PASSING THE 200 SIEVE. THE MODIFIED GRAVEL BORROW SPECIFIED FOR THIS DETAIL SHALL ONLY HAVE 8% MAXIMUM PASSING THE 200 SIEVE AS OPPOSED TO THE 10% MAX SPECIFIED FOR GRAVEL BORROW.

13 CEMENT CONCRETE WALKWAY
C-11 N.T.S.

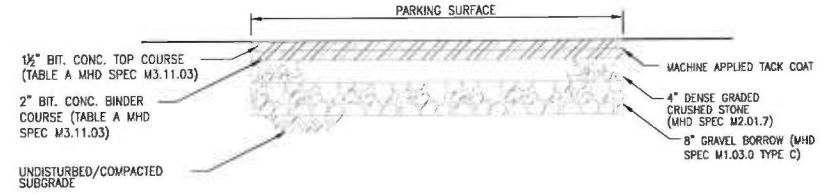

NOTES:
1. ALL COMPACTION TO A MINIMUM 95 PERCENT DRY DENSITY DETERMINED BY ASTM D1557. SEE SPECIFICATIONS FOR ADDITIONAL REQUIREMENTS.
2. SUBBASE AND BASE COURSE SHALL BE COMPACTED IN 1-FOOT (MAX) LIFTS.

3 STANDARD BITUMINOUS CONCRETE PAVEMENT SECTION
C-11 N.T.S.

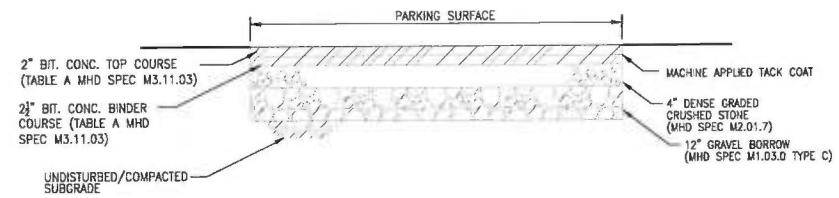

NOTES:
1. ALL COMPACTION TO A MINIMUM 95 PERCENT DRY DENSITY DETERMINED BY ASTM D1557. SEE SPECIFICATIONS FOR ADDITIONAL REQUIREMENTS.
2. SUBBASE AND BASE COURSE SHALL BE COMPACTED IN 1-FOOT (MAX) LIFTS.

8 HEAVY DUTY BITUMINOUS CONCRETE PAVEMENT SECTION
C-11 N.T.S.

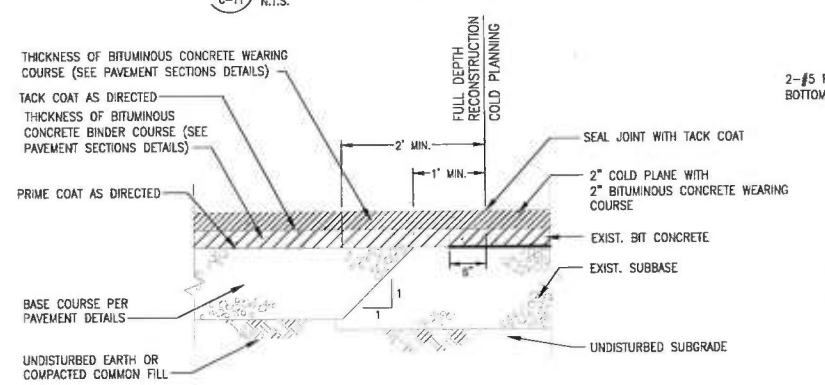

9 PAVEMENT MATCHING DETAIL
C-11 N.T.S.

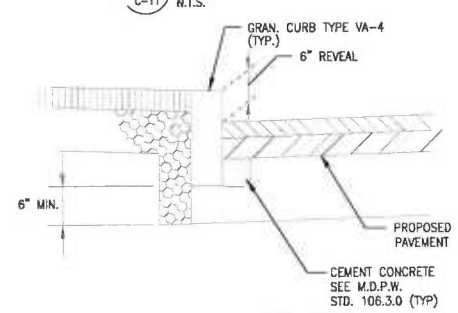

14 VERTICAL GRANITE CURB
C-11 N.T.S.

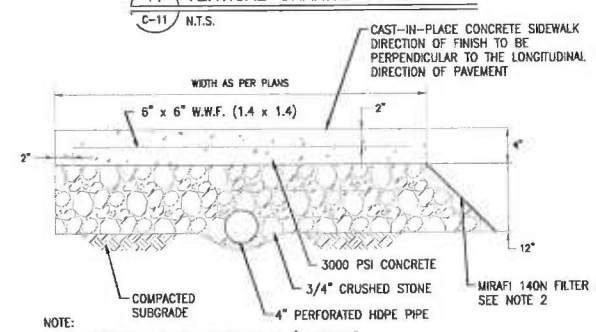

NOTE:
1. CONSTRUCTION JOINTS ARE TO BE AT 6' INTERVALS.
2. INSTALL FILTER FABRIC AS SHOWN WHERE WALKWAY ABUTS PLANTING OR LAWN AREAS.

16 CEMENT CONCRETE WALKWAY WITH UNDERDRAIN
C-11 N.T.S.

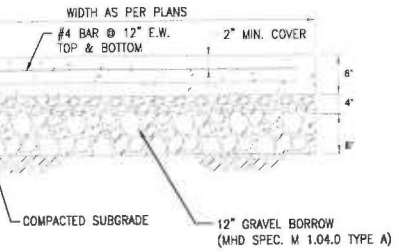

4 CONCRETE PAD FOR LOADING DOCK
C-11 N.T.S.

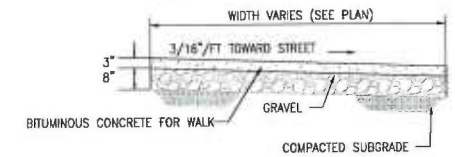

10 BITUMINOUS CONCRETE SIDEWALK
C-11 N.T.S.

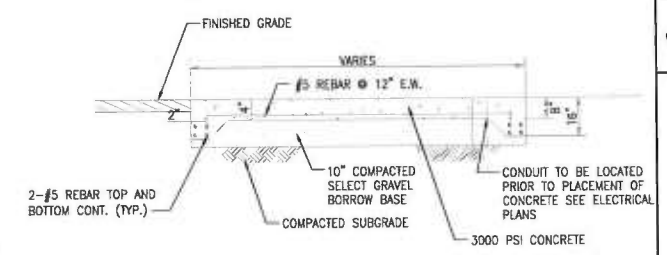

NOTE:
CONSTRUCTION JOINTS ARE TO BE AT 5' INTERVALS

11 CONCRETE PAD FOR UTILITIES
C-11 N.T.S.

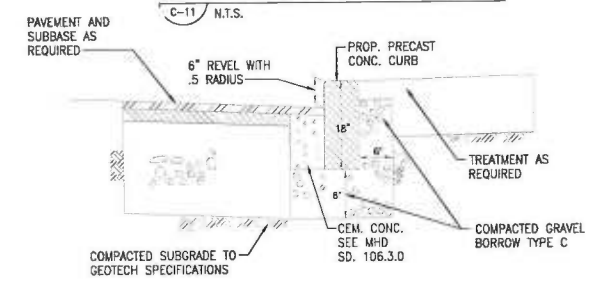

NOTE:
ALL CONCRETE TO BE 4,000 PSI

15 PRECAST CEMENT CONCRETE CURB
C-11 N.T.S.

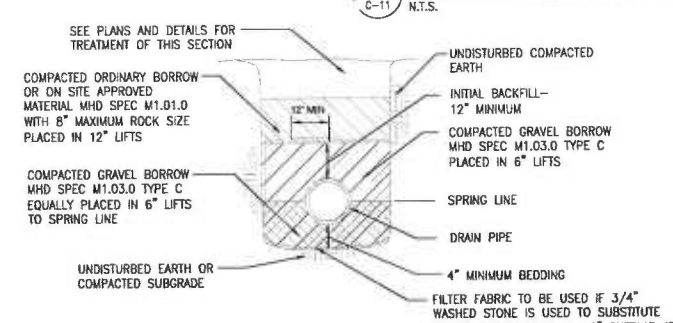

NOTES:
1. TRENCH EXCAVATION WIDTH TO ALLOW FOR FREE TRAVEL OF COMPACTION EQUIPMENT.
2. ALL COMPACTION TO A MINIMUM 95 PERCENT DRY DENSITY DETERMINED BY ASTM D1557. SEE SPECIFICATIONS FOR ADDITIONAL REQUIREMENTS.
3. AVOID HEAVY EQUIPMENT LOADS OVER PIPE DURING CONSTRUCTION.

17 DRAIN PIPE BEDING DETAIL
C-11 N.T.S.

SANOFI

Framingham, MA

KEYPLAN

PROJECT TITLE
8NYA – ICBF
ICBF Project

CONSULTANTS
JACOBS
JACOBS ENGINEERING PROJECT NO. 63RR3101

CURRENT REVISION	B
REVISION DESCRIPTION	Issued for SPA
DESIGN BY MM	REVISION DATE 11/28/2016
DRAWN BY AJW	APPROVED BY RES

REV	DATE	REVISION HISTORY	DSN	DRN	APP
B	11/28/2016	Issued for SPA	MM	AJW	RES
A	10/28/2016	Issued for Review	MM	MM	RES

CAD FILE
C-11.dwg

SANOFI PROJECT NUMBER	VENDOR JOB NUMBER 63RR3101
SCALE As Noted	VENDOR DRAWING NUMBER 63RR3101/C.C08/0015

SECURITY NOTICE
SANOFI CONFIDENTIAL INFORMATION
USE PURSUANT TO COMPANY INSTRUCTIONS

SHEET TITLE
Civil
CONSTRUCTION DETAILS 1

DOCUMENT TYPE

PRE EDMS NUMBER / REFERENCE DRAWING

DOCUMENT NUMBER
C-11

Nov 30, 2016 - 7:05am C:\Users\mgimbelin\Desktop\63RR3101\C.C08\0015\63RR3101X_C-11.dwg Plotted by Mark Gimbelin

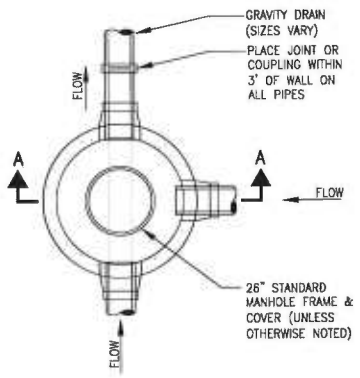

PLAN

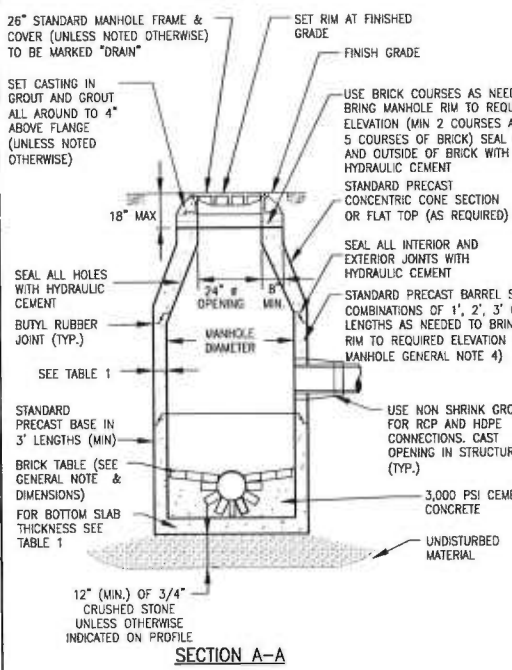

SECTION A–A

TYP. DRAIN MANHOLE(WITHIN ROW) TOWN OF FRAMINGHAM DPW: D–4.2.0.

C–12 N.T.S.

TABLE 1				
MANHOLE DIAMETER	SIDE WALL MIN. THICKNESS	BOTTOM SLAB MIN. THICKNESS	MAX PIPE DIAMETER * RCP	MAX PIPE DIAMETER * DI/PVC
4'	5"	6"	24"	30"
5'	6"	8"	36"	42"
6'	6"	8"	48"	54"
8'	8"	8"	66"	72"
10'	10"	10"	72"	84"

* MAY VARY DEPENDING ON SIZE AND LOCATION OF ADDITIONAL PENETRATIONS OR RELATIONSHIP OF PENETRATIONS IN MANHOLE

MANHOLE GENERAL NOTES:

1. DRAIN MANHOLE DIAMETER SHALL BE 4', 5', 6', 8' OR 10' AS SHOWN ON PLAN/PROFILE VIEWS.
2. DESIGN PRECAST SECTIONS WITH FRAME AND COVER FOR AASHTO H20 LOADINGS UNLESS OTHERWISE NOTED.
3. MANHOLES LARGER THAN 4' IN DIAMETER AT THE BASE SHALL BE REDUCED IN DIAMETER TO 4' AT THE NEXT RISER SECTION UNLESS NOTED OTHERWISE ON PLANS.

MANHOLE GENERAL NOTES AN DIMENSIONS TOWN OF FRAMINGHAM DPW: D–4.3.0.

C–12 N.T.S.

FRAMINGHAM PLANNING BOARD ENDORSEMENT

DATE OF ENDORSEMENT _____

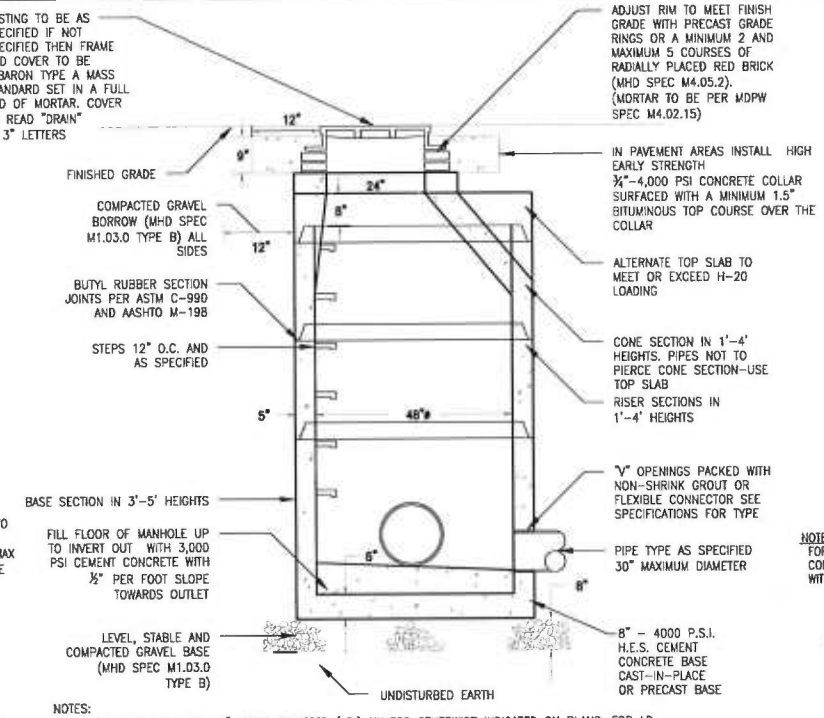

NOTES:

1. MANHOLES SHALL BE 48" INSIDE DIAMETER (I.D.) UNLESS OTHERWISE INDICATED ON PLANS. FOR I.D. SIZES GREATER THAN 48" REFER TO TABLE BELOW FOR THICKNESS REQUIREMENTS.
2. EXCAVATION TO ALLOW FOR FREE TRAVEL OF COMPACTION EQUIPMENT.
3. ALL COMPACTION TO A MINIMUM 95 PERCENT DRY DENSITY DETERMINED BY ASTM D1557. SEE SPECIFICATIONS FOR ADDITIONAL REQUIREMENTS.
4. ALL PRECAST TO MEET OR EXCEED ASTM C–478 AND AASHTO M 199 SPECIFICATIONS.
5. REINFORCED STEEL TO MEET OR EXCEED ASTM A185 AND H–20 LOADING REQUIREMENTS.
6. ALL PRECAST CONCRETE TO BE 4,000 PSI MINIMUM AND MEET ASTM C–478 (6.1).
7. IF NO STEPS ARE SPECIFIED THAN AS THE LOCAL MUNICIPALITY REQUIRES OR IF NO MUNICIPALITY REQUIREMENTS THEN COPOLYMER POLYPROPYLENE COATED REINFORCED PER ASTM C–478 AND OSHA (STD 1–1.9).
8. CONTRACTOR TO CONFIRM WITH CITY OR TOWN DPW THAT BRICK INVERTS ARE NOT A REQUIREMENT.
9. FILL ALL INTERNAL AND EXTERNAL HOLES WITH NON–SHRINK GROUT.

I.D.	BASE THICKNESS (MIN.)	WALL THICKNESS (MIN.)
5'	8"	6"
6'	8"	7"
8'	10"	9"
10'	10"	10"

PECAST CONCRETE DRAIN MANHOLE (OUTSIDE ROW)

C–12 N.T.S.

NOTES

1. TRENCH WIDTH AT CROWN = 2.5 X PIPE DIAMETER (MAX.)

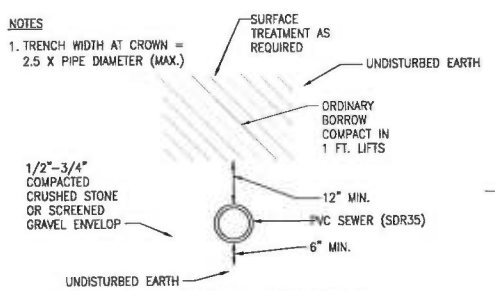

SEWER PIPE TRENCH DETAIL

C–12 N.T.S.

NOTES:

1. TRENCH EXCAVATION WIDTH TO ALLOW FOR FREE TRAVEL OF COMPACTION EQUIPMENT. MINIMUM TRENCH WIDTH=2.5 X PIPE DIAMETER
2. ALL PIPES TO BE CEMENT LINED DUCTILE IRON CLASS 52
3. SEE SPECIFICATIONS FOR ADDITIONAL INSTALLATION REQUIREMENTS
4. AVOID HEAVY EQUIPMENT LOADS OVER PIPE DURING CONSTRUCTION

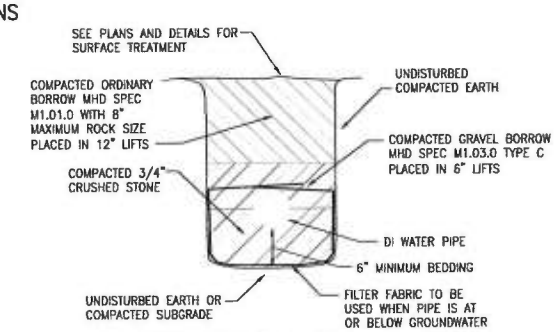

TYPICAL WATER MAIN TRENCH DETAIL

C–12 N.T.S.

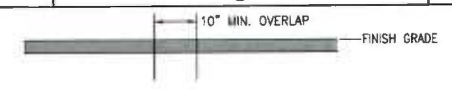

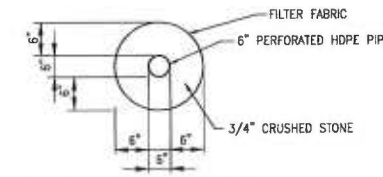

UNDERDRAIN DETAIL

C–12 N.T.S.

DROP CONNECTIONS TYPE B	
SEWER	MIN. DROP
8"	3'–9"
10"	4'–0"
12"	6'–0"
15"	6'–0"

NOTE: FOR 15" SEWERS WITH DROP CONNECTIONS USE WYE WITH 12" BRANCH.

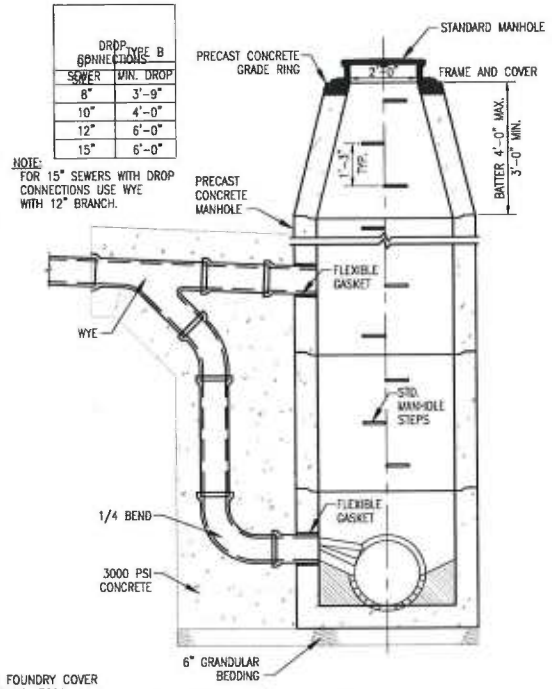

DROP MANHOLE

C–12 N.T.S.

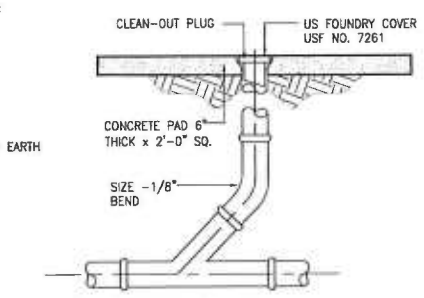

CLEANOUT DETAIL

C–12 N.T.S.

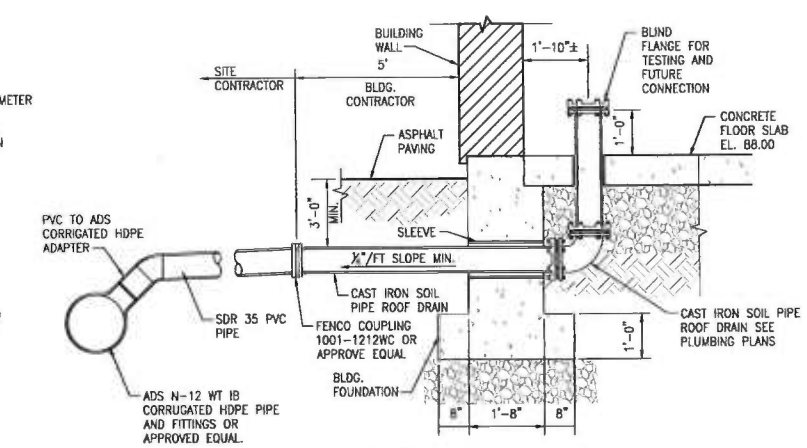

NOTES:

1. FOR STORM DRAINAGE PIPE LAYOUT, SLOPE AND INVERT ELEVATIONS SEE SITE PLAN DRAWING C6–"GRADING AND DRAINAGE PLAN"
2. ROOF LEADERS DISCHARGING DIRECTLY INTO A CORRUGATED HDPE PIPE SHALL BE CAST IRON SOIL PIPE TO PVC PIPE TO THE HDPE PIPE FITTING AS SHOWN.

ROOF DRAIN TIE–IN DETAIL

C–12 N.T.S.

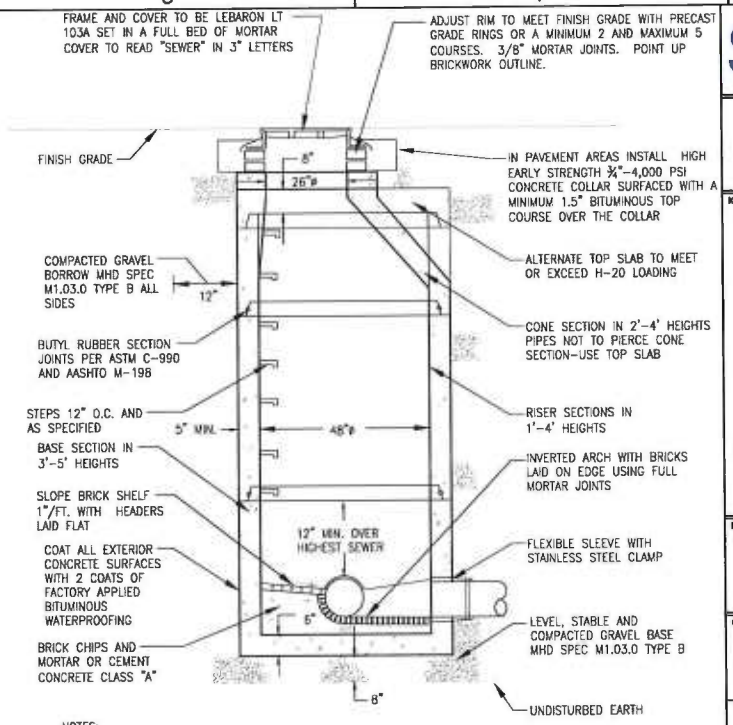

NOTES:

1. EXCAVATION TO ALLOW FOR FREE TRAVEL OF COMPACTION EQUIPMENT
2. ALL COMPACTION TO A MINIMUM 95 PERCENT DRY DENSITY DETERMINED BY ASTM D1557, SEE SPECIFICATIONS FOR ADDITIONAL REQUIREMENTS
3. ALL PRECAST TO MEET OR EXCEED ASTM C–478 AND AASHTO M 199 SPECIFICATIONS
4. REINFORCED STEEL TO MEET OR EXCEED ASTM A185 AND H–20 LOADING REQUIREMENTS
5. ALL PRECAST CONCRETE TO BE 4,000 PSI MINIMUM AND MEET ASTM C–478 (6.1)
6. FILL ALL INTERNAL AND EXTERNAL HOLES WITH NON–SHRINK GROUT
7. WHEN MANHOLE IS SET OVER EXISTING SEWER PIPE THE CONTRACTOR SHALL INSTALL AN 8"–4000 PSI HES CEMENT CONCRETE BASE CAST IN PLACE ON ON PRECAST BASE, AND SEAL JOINT BETWEEN BASE AND FIRST PRECAST SECTION WITH TWO ROWS OF BUTYL RUBBER.

PRECAST CONCRETE SEWER MANHOLE

C–12 N.T.S.

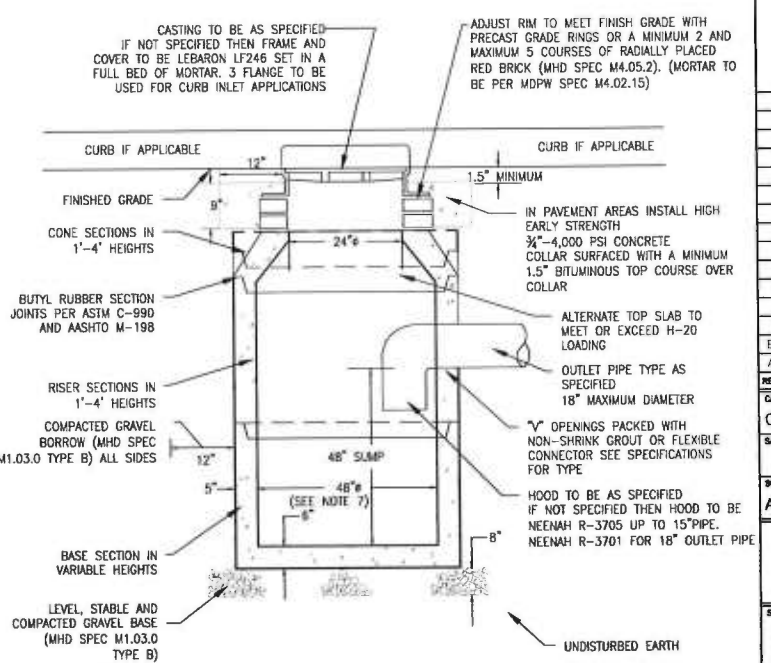

NOTES:

1. EXCAVATION TO ALLOW FOR FREE TRAVEL OF COMPACTION EQUIPMENT.
2. ALL COMPACTION TO A MINIMUM 95 PERCENT DRY DENSITY DETERMINED BY ASTM D1557 SEE SPECIFICATIONS FOR ADDITIONAL REQUIREMENTS.
3. ALL PRECAST TO MEET OR EXCEED ASTM C–478 AND AASHTO M 199 SPECIFICATIONS.
4. REINFORCED STEEL TO MEET OR EXCEED ASTM A185 AND H–20 LOADING REQUIREMENTS.
5. ALL PRECAST CONCRETE TO BE 4,000 P.S.I. MINIMUM AND MEET ASTM C–478 (6.1).
6. FILL ALL INTERNAL AND EXTERNAL HOLES WITH NON–SHRINK GROUT.
7. WHERE DOUBLE CATCH BASIN (I.D. 60") IS SPECIFIED ON PLAN, PROVIDE MINIMUM WALL DIMENSION OF 6", MINIMUM BASE DIMENSION OF 8" AND A 24"X48" DOUBLE FRAME AND GRATE.

PECAST CONCRETE CATCH BASIN

C–12 N.T.S.

SANOFI

Framingham, MA

KEYPLAN

PROJECT TITLE

8NYA – ICBF
ICBF Project

CONSULTANTS

JACOBS®
JACOBS ENGINEERING PROJECT NO. 63RR3101
THREE TOWER BRIDGE
700 ADAM STREET, SUITE 3000
CONSHOHOCKEN, PA 19428-2074
TEL. 610-238-1000
FAX. 610-238-1120

CURRENT REVISION	B
REVISION DESCRIPTION	Issued for SPA
DESIGN BY MM	REVISION DATE 11/28/2016
DRAWN BY AJW	APPROVED BY RES

REV	DATE	REVISION HISTORY	DSN	DWN	APP
B	11/28/2016	Issued for SPA	MM	AJW	RES
A	10/28/2016	Issued for Review	MM	MM	RES

CAD FILE: C–12.dwg

SANOFI PROJECT NUMBER	VENDOR JOB NUMBER 63RR3101
SCALE As Noted	VENDOR DRAWING NUMBER 63RR3101/C.C08/0017

SECURITY NOTICE
SANOFI CONFIDENTIAL INFORMATION
USE PURSUANT TO COMPANY INSTRUCTIONS

SHEET TITLE
Civil
CONSTRUCTION DETAILS 2

DOCUMENT TYPE

PRE EDMS NUMBER / REFERENCE DRAWING

DOCUMENT NUMBER
C–12

Nov 30, 2016 - 7:08am C:\Users\mgilmbrt\Desktop\63RR3101XX\63RR3101XX\C08\0017\63RR3101XX_C-12.dwg Plotted by Gilmbrt

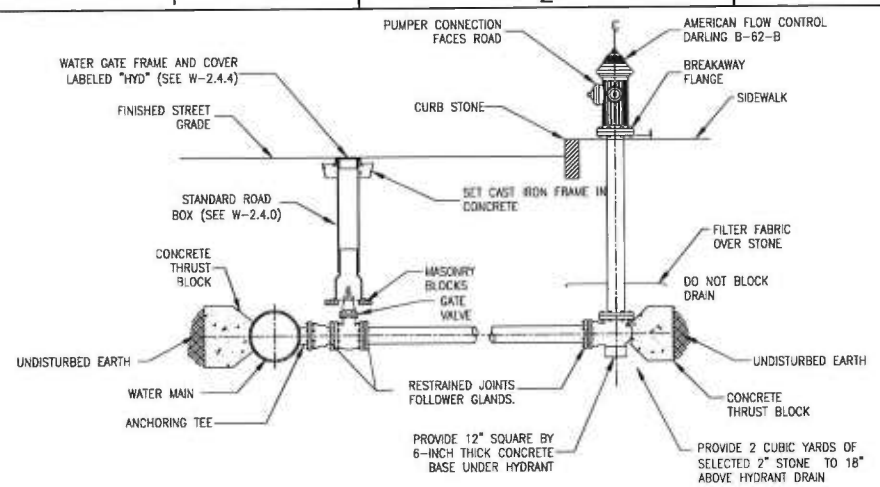

1 / C-13 FIRE HYDRANT INSTALLATION
N.T.S.

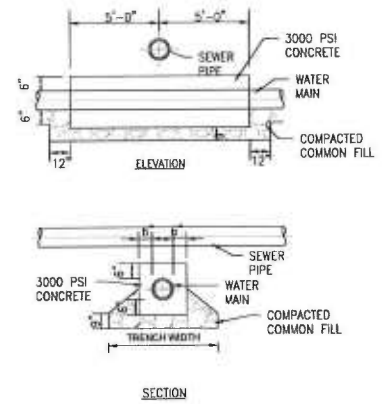

4 / C-13 CONCRETE SLEEVE
N.T.S.

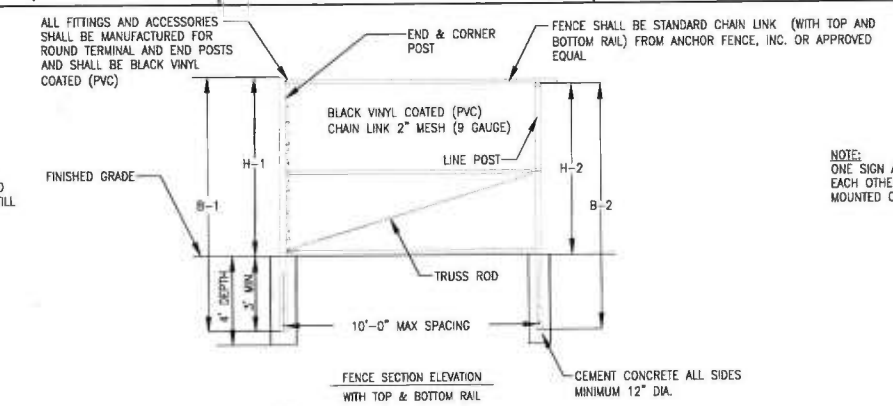

FENCE SECTION ELEVATION
WITH TOP & BOTTOM RAIL

NOTES:
1. END AND CORNER POSTS TO BE 3" O.D.
2. LINE POSTS TO BE 2.5" O.D.
3. TOP AND BOTTOM RAIL TO BE 1-5/8" O.D.
4. MIDDLE RAIL REQUIRED ON 10' HIGH FENCE
5. ALL FRAMEWORK TO BE BLACK VINYL COATED GALVANIZED STEEL, SS-40, HT-40 OR SCHEDULE 40

FENCE HEIGHT	END & CORNER POSTS		LINE POSTS	
NOMINAL HEIGHT	B-1 BAR LENGTH	H-1 HEIGHT ABOVE GRADE	B-2 BAR LENGTH	H-2 HEIGHT ABOVE GRADE
4'-0" [1219MM]	7'-0" [2133MM]	4'-0 5/8" [1235MM]	6'-8" [2032MM]	3'-8 7/8" [1140MM]
5'-0" [1524MM]	8'-0" [2438MM]	5'-0 5/8" [1540MM]	7'-8" [2337MM]	4'-8 7/8" [1445MM]
6'-0" [1829MM]	9'-0" [2743MM]	6'-0 5/8" [1845MM]	8'-8" [2642MM]	5'-8 7/8" [1749MM]
7'-0" [2134MM]	10'-0" [3048MM]	7'-0 5/8" [2150MM]	9'-8" [2946MM]	6'-8 7/8" [2054MM]
8'-0" [2438MM]	11'-0" [3353MM]	8'-0 5/8" [2454MM]	10'-8" [3251MM]	7'-8 7/8" [2359MM]
9'-0" [2743MM]	12'-0" [3658MM]	9'-0 5/8" [2759MM]	11'-8" [3556MM]	8'-8 7/8" [2664MM]
10'-0" [3048MM]	13'-0" [3962MM]	10'-0 5/8" [3064MM]	12'-8" [3861MM]	9'-8 7/8" [2969MM]

7 / C-13 CHAIN LINK FENCE DETAIL
N.T.S.

NOTE:
ONE SIGN AT EACH HANDICAP SPACE. WHERE HANDICAP SPACES FACE EACH OTHER WITHOUT A WALKWAY, THERE SHALL BE ONE POST WITH SIGNS MOUNTED ON BOTH SIDES.

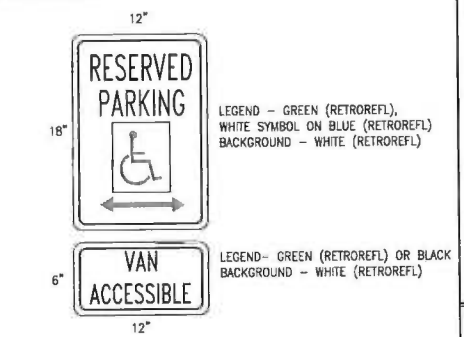

10 / C-13 PERMANNTLY INSTALLED SIGN
N.T.S.

NOTES:
1. THRUST BLOCKS WILL BE INSTALLED AT ALL CHANGES IN PIPE DIRECTION. 2. MEGALUG RETAINING GLANDS SHALL BE USED IN ADDITION TO THRUST BLOCKS.

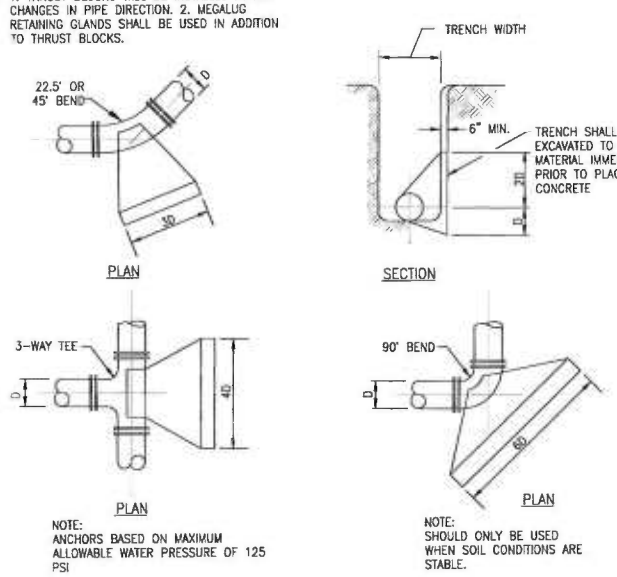

NOTE:
ANCHORS BASED ON MAXIMUM ALLOWABLE WATER PRESSURE OF 125 PSI

NOTE:
SHOULD ONLY BE USED WHEN SOIL CONDITIONS ARE STABLE.

2 / C-13 CONCRETE THRUST BLOCKS
N.T.S.

NOTES:
1. FOR USE WITH 12" AND SMALLER WATER MAINS.

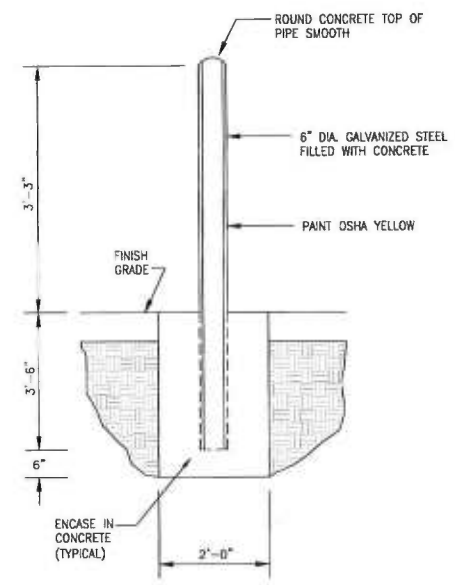

5 / C-13 BOLLARD DETAIL
N.T.S.

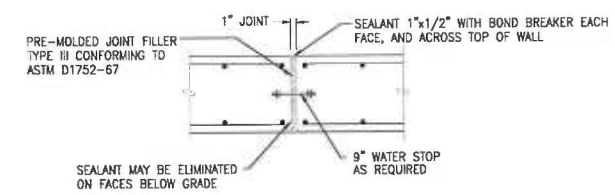

NOTES:
1. SEALANT TO BE APPLIED TO ALL SURFACES EXPOSED TO GROUND OR LIQUID.
2. TERMITE SEALANT ONE FOOT BELOW FINISHED GRADE ON EXTERIOR FACE ONLY.

8 / C-13 EXPANSION JOINT FOR CONCRETE RETAINING WALL
N.T.S.

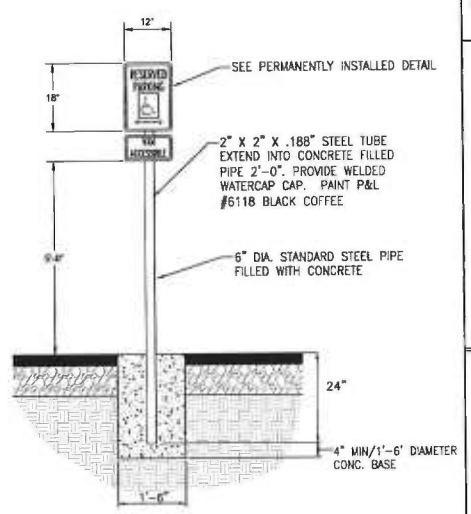

11 / C-13 ACCESSIBLE SPACE SIGN POST/BASE
N.T.S.

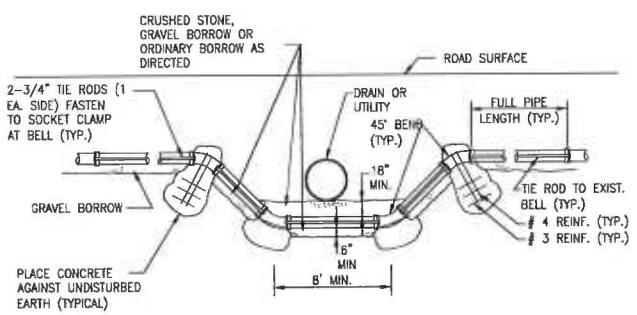

NOTES:
1. SEE THRUST BLOCK DETAIL FOR BEARING AREAS.
2. SEWER/WATER CROSSING TO BE PER TOWN OF FRAMINGHAM AND STATE STANDARDS.

3 / C-13 WATER MAIN CROSSING DETAIL
N.T.S.

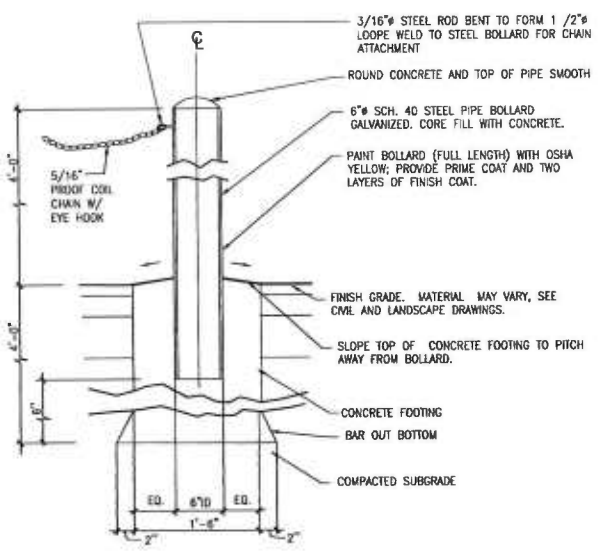

6 / C-13 BOLLARD AND CHAIN DETAIL
N.T.S.

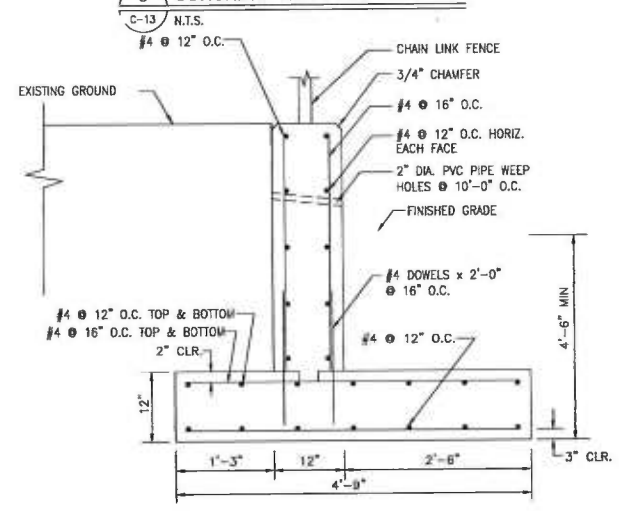

NOTES:
1. BOTTOM OF ALL FOOTINGS SHALL BE A MINIMUM OF 4'-6" BELOW FINISHED GRADE. THE RETAINING WALL HAS BEEN DESIGNED BASED ON A SOIL BEARING CAPACITY OF 2,500 PSF. THE FOOTING SHALL BE LOWERED AND/OR INCREASED IN SIZE AS DIRECTED BY THE ENGINEER WITH THE CONTRACTOR COMPENSATED ACCORDING TO THE PROVISIONS OF THE CONTRACT DOCUMENTS.
2. ALL STRUCTURAL CONCRETE SHALL HAVE A MINIMUM 28 DAY COMPRESSIVE STRENGTH OF 4,000 PSI.
3. REINFORCING STEEL SHALL BE DEFORMED BARS IN ACCORDANCE WITH ASTM A-615, GRADE 60 EXCEPT TIPS AND STIRRUPS, WHICH SHALL BE GRADE 40. MAIN REINFORCING STEEL TO BE PLACED SO AS TO PROVIDE A MINIMUM 3" COVER FOR FOUNDATIONS POURED ON EARTH. PROVIDE ACCESSORIES AND BAR SUPPORTS IN ACCORDANCE WITH THE MANUAL OF STANDARD PRACTICE FOR DETAILING REINFORCED CONCRETE STRUCTURES (ACI 3135-15).
4. PROVIDE THREE (3) CONSTRUCTION JOINTS EVENLY SPACED ALONG THE WALL.

9 / C-13 CONCRETE RETAINING WALL DETAIL
N.T.S.

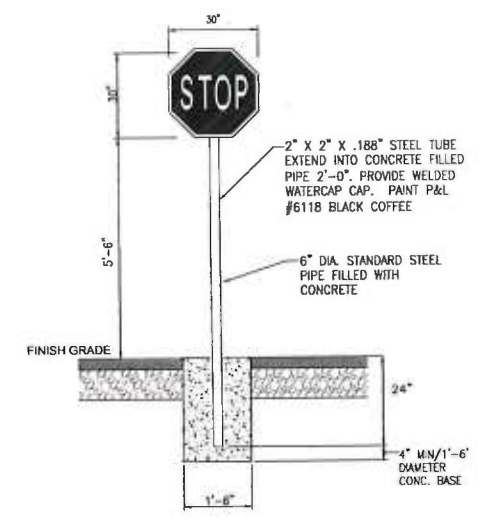

12 / C-13 STOP SIGN POST/BASE
N.T.S.

FRAMINGHAM PLANNING BOARD ENDORSEMENT

DATE OF ENDORSEMENT

SANOFI

Framingham, MA

KEYPLAN

PROJECT TITLE
BNYA – ICBF
ICBF Project

CONSULTANTS
JACOBS
THREE TOWER BRIDGE
TWO ASH STREET, SUITE 3000
CONSHOHOCKEN, PA. 19428-2074
TEL. 610-239-3500
FAX. 610-239-1100
JACOBS ENGINEERING PROJECT NO. 63RR3101

CURRENT REVISION	B
REVISION DESCRIPTION	Issued for SPA
DESIGN BY MM	REVISION DATE 11/28/2016
DRAWN BY AJW	APPROVED BY RES

REV	DATE	REVISION HISTORY	DSN	DWN	APP
B	11/28/2016	Issued for SPA	MM	AJW	RES
A	10/28/2016	Issued for Review	MM	MM	RES

CAD FILE
C-13.dwg

SANOFI PROJECT NUMBER	VENDOR JOB NUMBER
	63RR3101
SCALE: As Noted	VENDOR DRAWING NUMBER: 63RR3101/C.C08/0016

SECURITY NOTICE
SANOFI CONFIDENTIAL INFORMATION
USE PURSUANT TO COMPANY INSTRUCTIONS

SHEET TITLE
Civil
CONSTRUCTION DETAILS 3

DOCUMENT TYPE

PRE EDMS NUMBER / REFERENCE DRAWING

DOCUMENT NUMBER
C-13

Nov 30, 2016 - 7:00am C:\SANOFI\EDMS\RR3101\C\C08\0016\RR3101X_C-13.dwg Plotted by Gimbelfin

WHEELCHAIR RAMPS SHALL BE CONSTRUCTED IN CONFORMANCE WITH THE CURRENT REGULATIONS OF THE ARCHITECTURAL ACCESS BOARD, THE AMERICANS WITH DISABILITIES ACT AND THE CURRENT MASSHIGHWAY CONSTRUCTION STANDARDS.

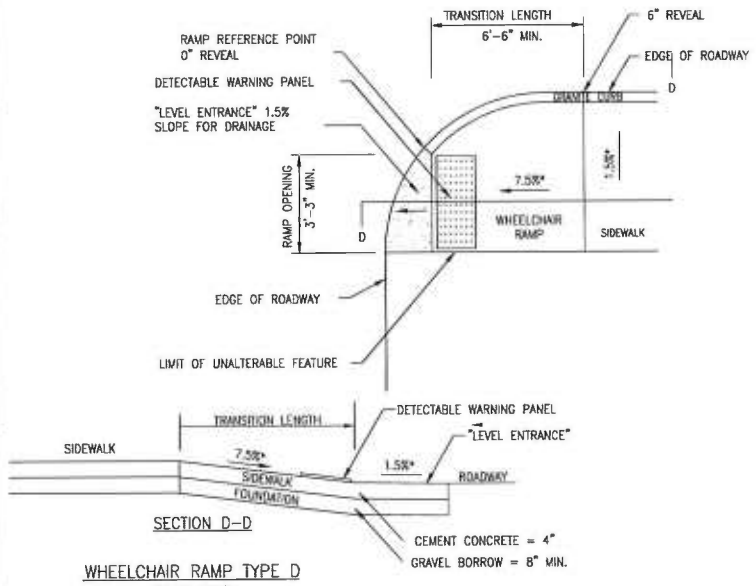

WHEELCHAIR RAMP TYPE D
NOT TO SCALE

LEGEND:

HSL = HIGH SIDE TRANSITION LENGTH

W = SIDEWALK WIDTH

W1 = PERPENDICULAR RAMP LENGTH

* = TOLERANCE FOR CONSTRUCTION ±0.5%

USABLE SIDEWALK WIDTH PER AAB IS NOT TO BE LESS THAN 4'-0"

SEE M/E 107.6.5R FOR DETAILS OF DETECTABLE WARNING PANEL

WHEELCHAIR RAMP TYPE D
2 / C-14 TOWN OF FRAMINGHAM DPW: R-5.3.4.
N.T.S.

1. ROADWAY SIDEWALK CROSS SLOPES, FOR BRICK, CEMENT CONCRETE, AND BITUMINOUS CONCRETE, AS INDICATED IN THE CONSTRUCTION STANDARDS, WILL BE 1.5%. A CONSTRUCTION TOLERANCE OF ±0.5% IS ACCEPTABLE ON ROADWAY SIDEWALKS. SIDEWALKS ON BRIDGES WILL BE CONSTRUCTED TO A CROSS SLOPE OF 1.0% IN ACCORD WITH MASSDOT BRIDGE POLICY. IN ACCORDANCE WITH 521 CMR THE RULES AND REGULATIONS OF THE ARCHITECTURAL ACCESS BOARD (AAB), THE SIDEWALK CROSS SLOPE CANNOT EXCEED 2.0%.

2. AN UNOBSTRUCTED PATH OF TRAVEL WITH A MINIMUM WIDTH OF 3'-3" (PREFERED MINIMUM WIDTH OF 5'-0" FOR SIDEWALK MAINTENANCE) SHALL BE MAINTAINED PAST ALL OBSTRUCTIONS (UTILITY POLES, SIGNS, SIGNAL FOUNDATIONS, MASTS, MAILBOXES, ALONG DRIVE OPENINGS, ETC.).

3. THE WHEELCHAIR RAMP SLOPES AND SIDE SLOPES (TRANSITIONS) WILL BE MAXIMUM OF 7.5% WITH A CONSTRUCTION TOLERANCE OF ±0.5%. HOWEVER THESE SLOPES MAY BE FLATTER WHEN WARRANTED BY SURROUNDING CONDITIONS.

4. WHERE THE ROADWAY PROFILE EXCEEDS 4%, THE HIGH SIDE TRANSITION LENGTH UNDER ANY CONDITIONS NEED NOT EXCEED 15'-0".

5. IN NO CASE WHERE A STOP LINE IS WARRANTED, SHALL A RAMP BE PLACED ON THE TRAFFIC APPROACH SIDE OF THAT STOP LINE.

6. FIXED OBJECTS (I.E. UTILITY POLES, HYDRANTS, SIGNS, SIGNAL FOUNDATIONS, ETC.) MUST NOT ENCROACH ON ANY PART OF THE WHEELCHAIR RAMP INCLUDING TRANSITION SLOPES.

7. AT NO TIME IS ANY PART OF THE WHEELCHAIR RAMP, EXCLUDING CURB TRANSITIONS TO BE LOCATED OUTSIDE THE CROSSWALK. THE WHEELCHAIR RAMP ENTRANCE IS TO BE CENTERED IN THE CROSSWALK WHENEVER POSSIBLE.

8. CATCH BASINS WHICH ARE TO BE LOCATED IN THE VICINITY OF A WHEELCHAIR RAMP SHALL BE LOCATED UPGRADE OF THE RAMP ENTRANCE.

9. THE ENTRANCE OF A WHEELCHAIR RAMP SHALL BE FLUSH WITH THE ROADWAY.

10. TESTING SURFACE: WHEN TESTING WITH A STRAIGHTEDGE PLACED PARALLEL TO THE LINE OF THE SLOPE THERE SHALL BE NO DEVIATION FROM A TRUE SURFACE IN EXCESS OF ¼".

11. WHEELCHAIR RAMPS ON BRIDGES SHOULD BE AVOIDED. IF A WHEELCHAIR RAMP IS REQUIRED TO BE PLACED ON A BRIDGE, PRIOR WRITTEN APPROVAL IS REQUIRED. SPECIAL DETAILING OF THE REINFORCEMENT AND CURB SYSTEM WILL BE REQUIRED TO MAINTAIN THE PREFORMANCE OF THE RAILING/BARRIER SYSTEM.

CURB TRANSITION LENGTH FOR WHEELCHAIR RAMPS		
ROADWAY PROFILE GRADE	*HIGH SIDE TRANSITION LENGTH (HST) 6" REVEAL	*HIGH SIDE TRANSITION LENGTH (HST) 7" REVEAL
%		
0	6'-6"	7'-8"
> 0 TO 1	7'-8"	9'-0"
> 1 TO 2	9'-0"	10'-8"
> 2 TO 3	11'-0"	12'-10"
> 3 TO 4	14'-0"	16'-0"
> 4	15'-0" MAX	17'-0" MAX

* BASED ON A DESIGN SLOPE OF 7.5%. VARING CURB REVEAL MAY ALTER HST LENGTH.

WHEELCHAIR RAMP NOTES
1 / C-14 TOWN OF FRAMINGHAM DPW: R-5.3.0.
N.T.S.

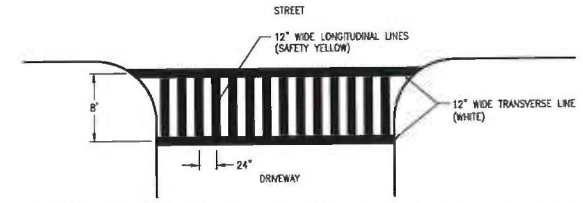

PAVEMENT MARKING - FAST DRYING WATER-BORNE OR OTHER TRAFFIC PAINT

NOTES:

1. CROSSWALK MARKINGS SHALL CONSIST OF SOLID WHITE OR YELLOW (AS INDICATED) LINES (BOTH TRANSVERSE AND LONGITUDINAL) 12 INCHES IN WIDTH.
2. CROSSWALKS SHALL BE 8 FEET WIDE.
3. LONGITUDINAL LINES SHALL BE SPACED 48" APART ON CENTER FOR NEW ROADWAYS, 24" APART ON CENTER FOR EXISTING ROADWAYS.
4. CROSSWALK LINES SHALL EXTEND ACROSS THE FULL WIDTH OF PAVEMENT OR TO THE EDGE OF THE INTERSECTING CROSSWALK.
5. CROSSWALKS SHALL BE MARKED AT ALL INTERSECTIONS WHERE THERE IS SUBSTANTIAL CONFLICT BETWEEN VEHICULAR AND PEDESTRIAN MOVEMENT.
6. CROSSWALK MARKINGS FOR NEW ROADWAYS SHALL BE INSTALLED USING THERMOPLASTIC PAVING MARKING MATERIAL TO MEET MHD SPECIFICATIONS M07.01.03 (WHITE) AND M07.01.04 (YELLOW).
7. CROSSWALK MARKINGS FOR EXISTING ROADWAYS SHALL BE INSTALLED USING FAST DRYING WATER-BORNE TRAFFIC PAINT PAVING MARKING MATERIAL TO MEET MHD SPECIFICATIONS M07.01.23 (WHITE) AND M07.01.24 (YELLOW).

CROSS WALK
4 / C-14 TOWN OF FRAMINGHAM DPW: R-5.5.0.
N.T.S.

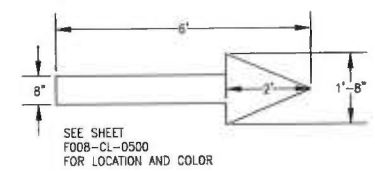

SEE SHEET
F008-CL-0500
FOR LOCATION AND COLOR

5 / C-14 PAVEMENT ARROW
N.T.S.

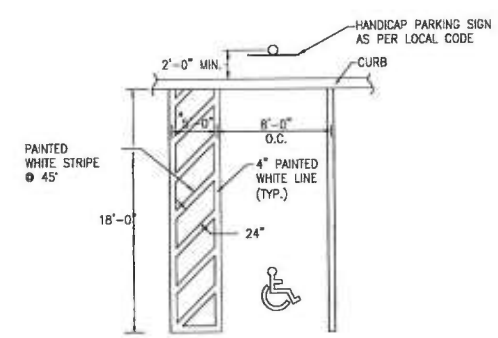

* PAINTED AISLE 8'-0" WIDE FOR HC VAN SPACES.

FRAMINGHAM HANICAP
6 / C-14 PARKING SPACE DETAIL
N.T.S.

WHEELCHAIR RAMPS SHALL BE CONSTRUCTED IN CONFORMANCE WITH THE CURRENT REGULATIONS OF THE ARCHITECTURAL ACCESS BOARD, THE AMERICANS WITH DISABILITIES ACT AND THE CURRENT MASS HIGHWAY CONSTRUCTION STANDARDS.

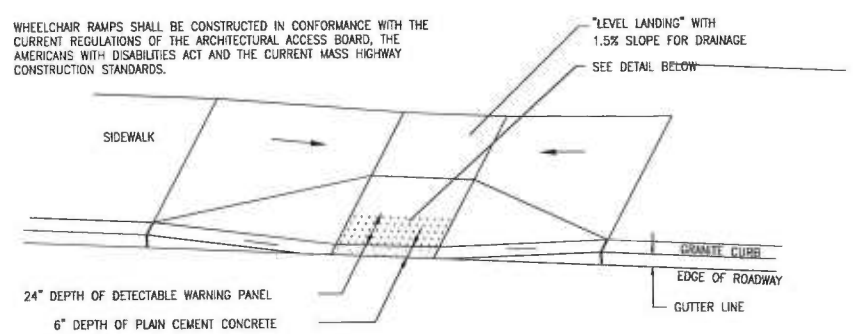

TYPICAL INSTALLATION

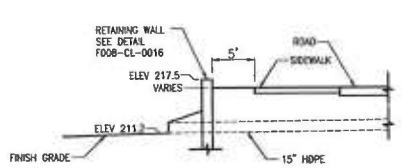

SECTION A-A

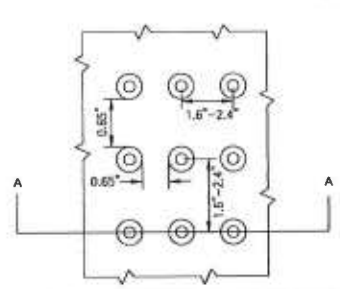

DETAIL OF DETECTABLE WARNING PANEL

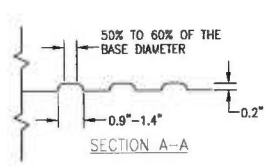

SECTION A-A

NOTE:
PANELS SHALL BE "BRICK RED" IN COLOR AND SHALL BE CAST-IN-PLACE WITH WHEELCHAIR RAMP CEMENT CONCRETE. SURFACE APPLIED TACTILE PANELS SHALL NOT BE UTILIZED.

DETECTABLE WARNING PANEL
3 / C-14 TOWN OF FRAMINGHAM DPW: R-5.3.6.
N.T.S.

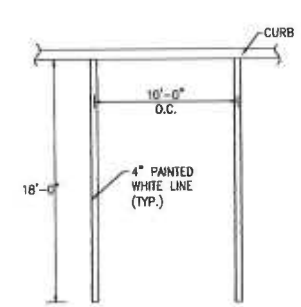

FRAMINGHAM PARKING SPACE
7 / C-14 AT END OF STALL
N.T.S.

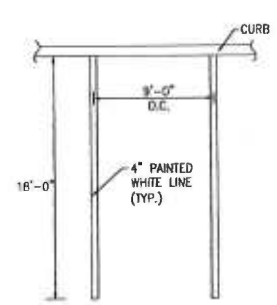

FRAMINGHAM STANDARD
8 / C-14 PARKING SPACE DETAIL
N.T.S.

FRAMINGHAM PLANNING BOARD ENDORSEMENT

DATE OF ENDORSEMENT

SANOFI

Framingham, MA

KEYPLAN

PROJECT TITLE
8NYA – ICBF
ICBF Project

CONSULTANTS
JACOBS
THREE TOWER BRIDGE
TWO ASH STREET, SUITE 3000
CONSHOHOCKEN, PA. 19428-2074
TEL. 610-239-1000
FAX. 610-239-1100
JACOBS ENGINEERING PROJECT NO. 63RR3101

CURRENT REVISION	B
REVISION DESCRIPTION	Issued for SPA
DESIGN BY MM	REVISION DATE 11/28/2016
DRAWN BY AJW	APPROVED BY RES

REV	DATE	REVISION HISTORY	DSN	DWN	APP
B	11/28/2016	Issued for SPA	MM	AJW	RES
A	10/28/2016	Issued for Review	MM	MM	RES

CAD FILE
C-14.dwg

SANOFI PROJECT NUMBER
VENDOR JOB NUMBER
63RR3101

SCALE
As Noted
VENDOR DRAWING NUMBER
63RR3101/C.C08/0014

SECURITY NOTICE
SANOFI CONFIDENTIAL INFORMATION
USE PURSUANT TO COMPANY INSTRUCTIONS

SHEET TITLE
Civil
CONSTRUCTION DETAILS 4

DOCUMENT TYPE

PRE EDMS NUMBER / REFERENCE DRAWING

DOCUMENT NUMBER
C-14

Nov 30, 2016 - 7:05am C:\Users\AJW\Desktop\63RR3101\XXXX\63RR3101\C.C08\0014\63RR3101XX_C-14.dwg Plotted by: Gimbelm

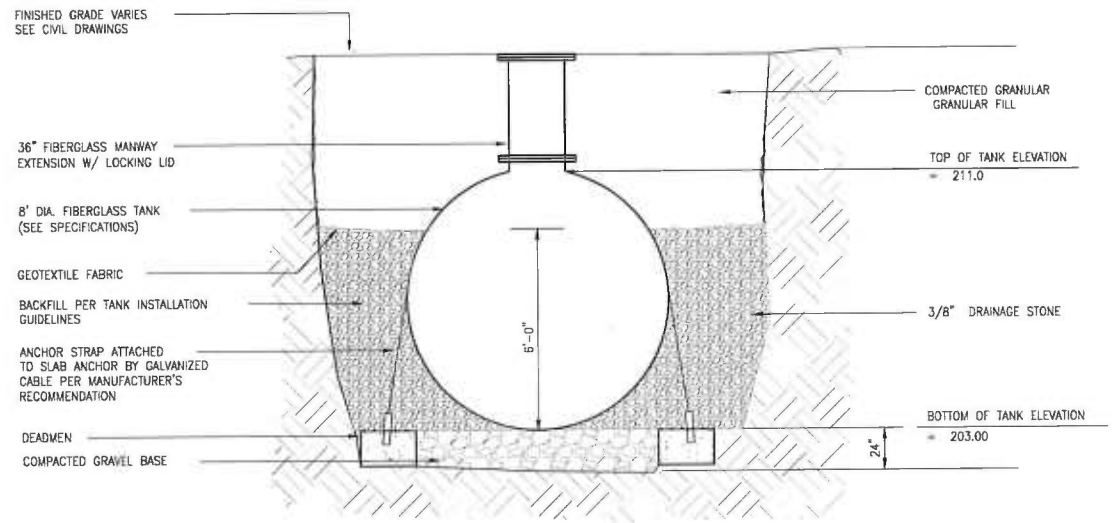

SECTION

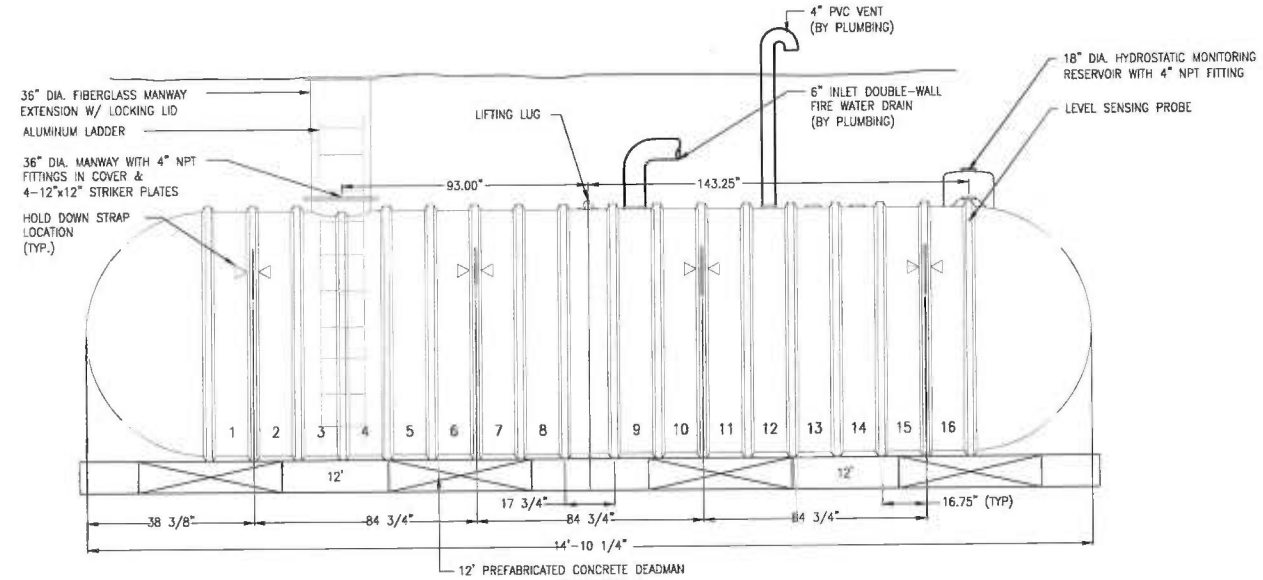

ELEVATION

NOTES:

- EXCAVATION, BACKFILL, & COMPACTION IN ACCORDANCE WITH SPECIFICATIONS, AND MANUFACTURERS INSTALLATION INSTRUCTIONS.
- INSTALL TANK AND DEADMEN ACCORDING TO MANUFACTURERS INSTALLATION INSTRUCTIONS.
- PROBE SHALL BE EQUIPPED WITH AN AUDIBLE AND VISIBLE ALARM TO BE LOCATED WITHIN BUILDING. CONTROL BOXES AND ELECTRICAL WIRING SHALL BE INSTALLED TO MANUFACTURERS SPECIFICATIONS AND IN COMPLIANCE WITH ALL STATE AND LOCAL REGULATIONS. CONTROL BOX SHALL DETECT 6-INCHES OF LIQUID AND 3/5 OF TANK CAPACITY.

1 / C-15 — 2,500 GALLON DOUBLE WALL REINFORCED FIBERGLASS TANK

N.T.S.

NOTES:

- DEADMEN ARE ENGINEERED AND DESIGNED BY THE TANK MANUFACTURER.
- IN MULTIPLE TANK INSTALLATIONS, EACH TANK REQUIRES ITS OWN SET OF DEADMEN.

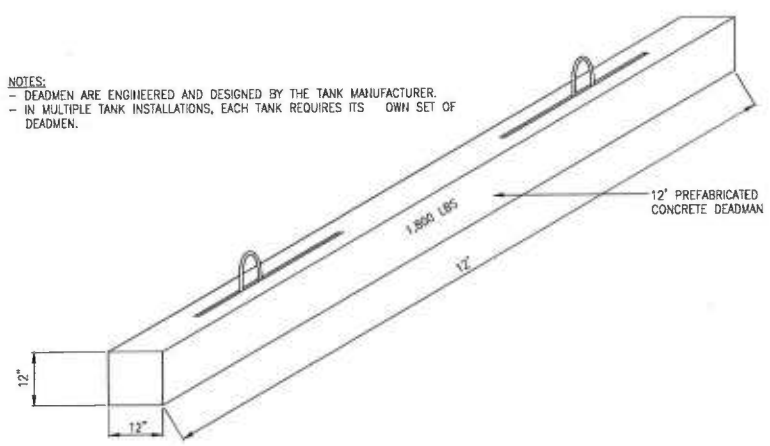

2 / F008-CI-0018 — TYPICAL SECTION REINFOCED RETAINING WELL

N.T.S.

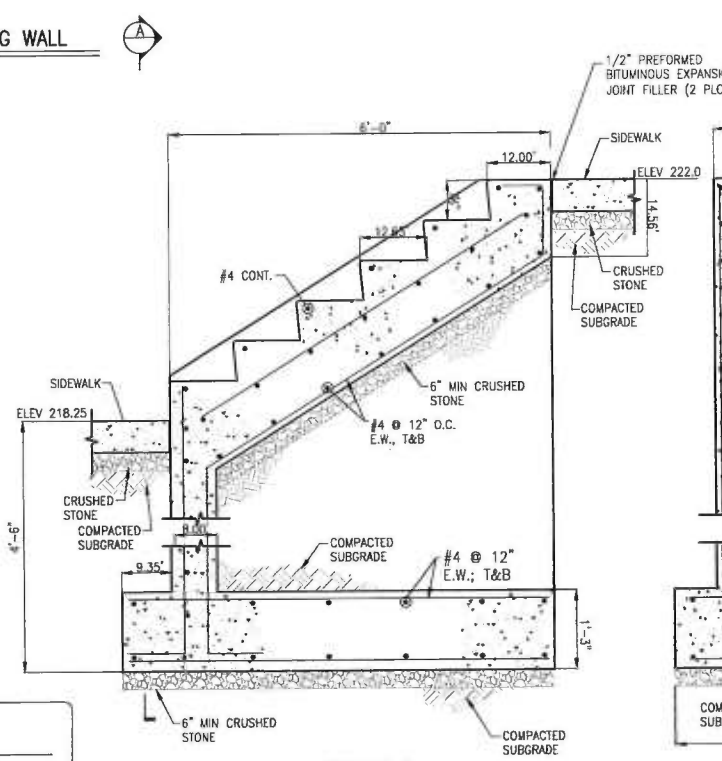

SECTION B

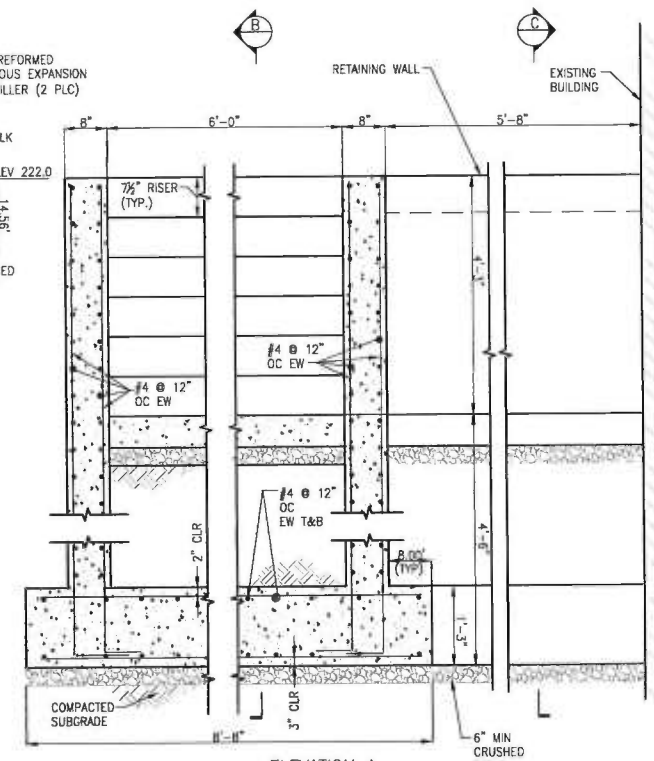

ELEVATION A

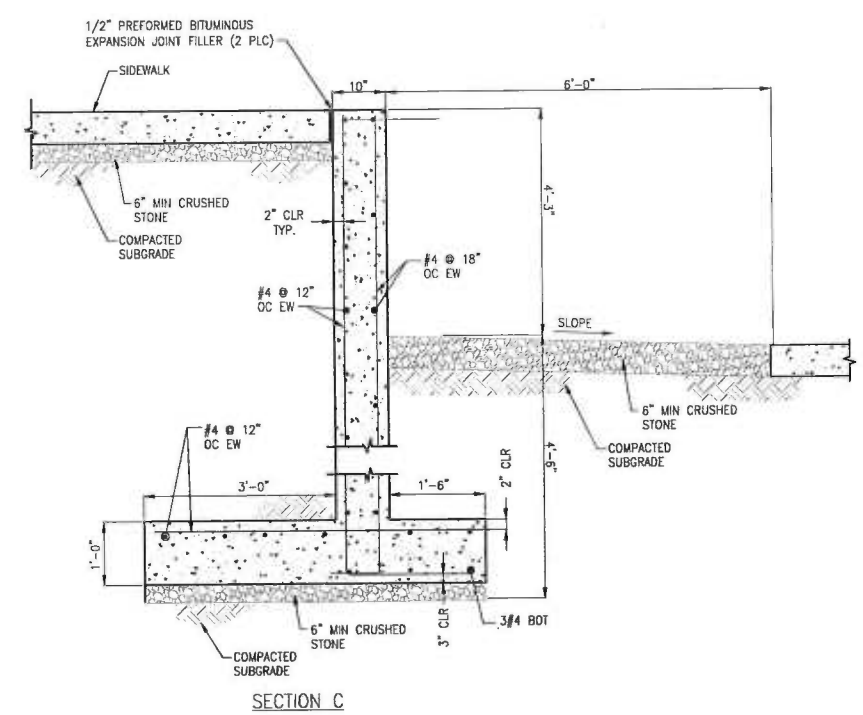

SECTION C

0 1' 2' 3'
3/4"=1'-0"

2 / C-15 — CEMENT CONCRETE STEPS DETAIL

3/4" = 1'-0"

FRAMINGHAM PLANNING BOARD ENDORSEMENT

DATE OF ENDORSEMENT

SANOFI

Framingham, MA

KEYPLAN

PROJECT TITLE
8NYA – ICBF
ICBF Project

CONSULTANTS
JACOBS
JACOBS ENGINEERING PROJECT NO. 63RR3101
THREE TOWER BRIDGE
700 ALBIN STREET, SUITE 3000
CONSHOHOCKEN, PA 19428-2974
TEL 610-234-1000
FAX 610-234-1100

CURRENT REVISION	B
REVISION DESCRIPTION	Issued for SPA
DESIGN BY MM	REVISION DATE 11/28/2016
DRAWN BY AJW	APPROVED BY RES

REV	DATE	REVISION HISTORY	DSN	DRN	APP
B	11/28/2016	Issued for SPA	MM	AJW	RES
A	10/28/2016	Issued for Review	MM	MM	RES

CAD FILE
C-15.dwg

SANOFI PROJECT NUMBER
VENDOR JOB NUMBER
63RR3101

SCALE
As Noted

VENDOR DRAWING NUMBER
63RR3101/C.C08/0013

SECURITY NOTICE
SANOFI CONFIDENTIAL INFORMATION
USE PURSUANT TO COMPANY INSTRUCTIONS

SHEET TITLE
Civil
CONSTRUCTION DETAILS 5

DOCUMENT TYPE

PRE EDMS NUMBER / REFERENCE DRAWING

DOCUMENT NUMBER
C-15

Nov 30, 2016 - 7:04am C:\Users\MMORSE\Desktop\63RR3101\C.C08\0013\63RR3101_C-15.dwg Plotted by Framingham

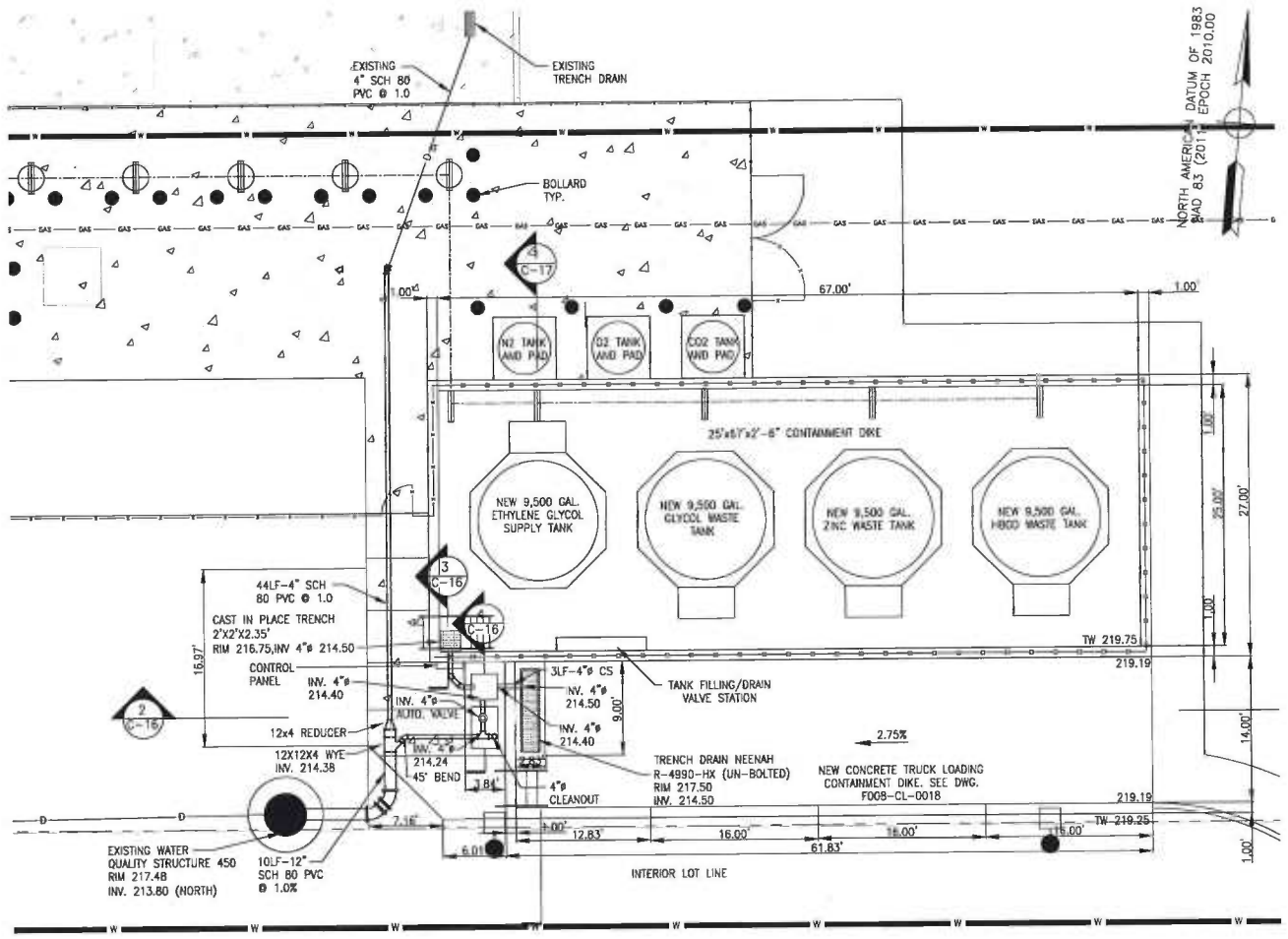

1 C-16 NEW CONCRETE TRUCK UNLOADING CONTAINMNT
1/8"=1'-0"

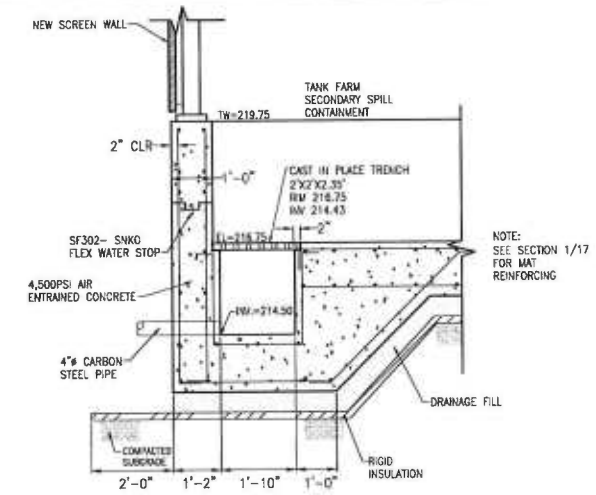

3 C-16 SECTION
N.T.S.

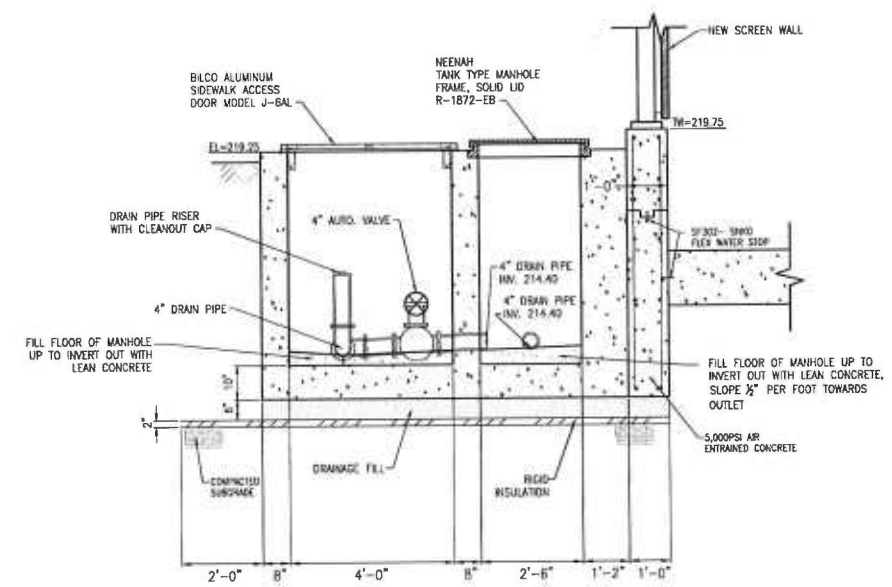

4 C-16 SECTION
N.T.S.

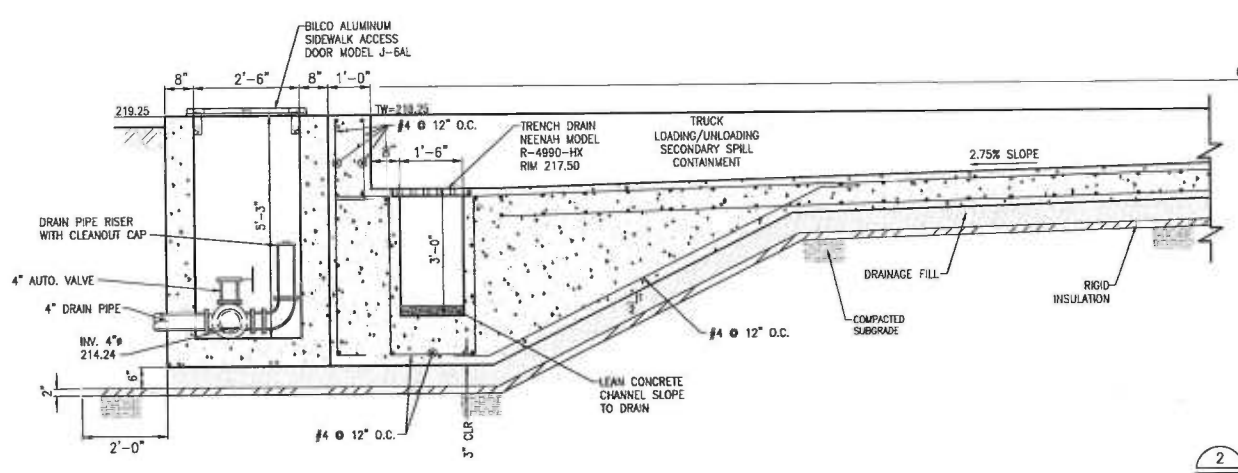

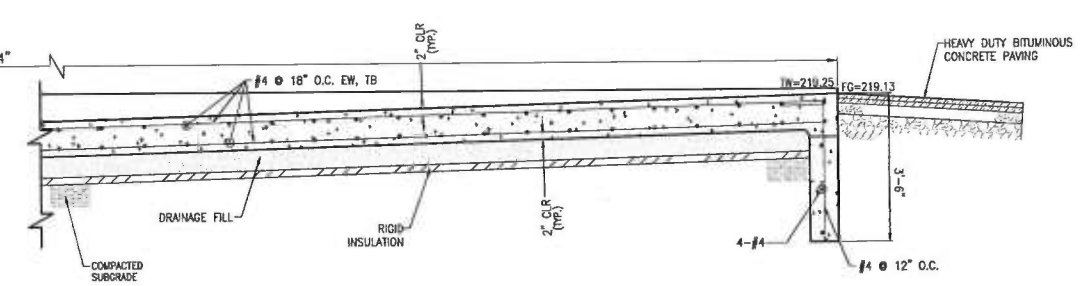

2 C-16 SECTION AT TRUCK LOADING/UNLOADING
N.T.S.

NOTE:

1. DRAINAGE FILL: MASSDOT CRUSHED STONE GRADATION M2.01.4.

FRAMINGHAM PLANNING BOARD ENDORSEMENT

DATE OF ENDORSEMENT

0 4' 8' 16'
1/8"=1'-0"
0 2' 4' 8'
1/4"=1'-0"

SANOFI

Framingham, MA

KEYPLAN

PROJECT TITLE
BNYA – ICBF
ICBF Project

CONSULTANTS
JACOBS
THREE TOWER BRIDGE
TWO ASH STREET, SUITE 3005
CONSHOHOCKEN, PA. 19428-2074
TEL. 610-239-1000
FAX. 610-239-1100
JACOBS ENGINEERING PROJECT NO. 63RR3101

CURRENT REVISION	B
REVISION DESCRIPTION	Issued for SPA
DESIGN BY: MM	REVISION DATE: 11/28/2016
DRAWN BY: AJW	APPROVED BY: RES

REV	DATE	REVISION HISTORY	DSN	DRN	APP
B	11/28/2016	Issued for SPA	MM	AJW	RES
A	10/28/2016	Issued for Review	MM	MM	RES

CAD FILE: C-16.dwg

SANOFI PROJECT NUMBER

VENDOR JOB NUMBER: 63RR3101

SCALE: As Noted

VENDOR DRAWING NUMBER: 63RR3101/C.C08/0010

SECURITY NOTICE
SANOFI CONFIDENTIAL INFORMATION
USE PURSUANT TO COMPANY INSTRUCTIONS

SHEET TITLE
Civil
CONSTRUCTION DETAILS 6

DOCUMENT TYPE

PRE EDMS NUMBER / REFERENCE DRAWING

DOCUMENT NUMBER
C-16

Nov 30, 2018 - 7:03am C:\Users\ajw\Desktop\63RR3101\C.C08\63RR3101\C.C08\0010\63RR3101X_C-16.dwg Plotted by Gimbelm

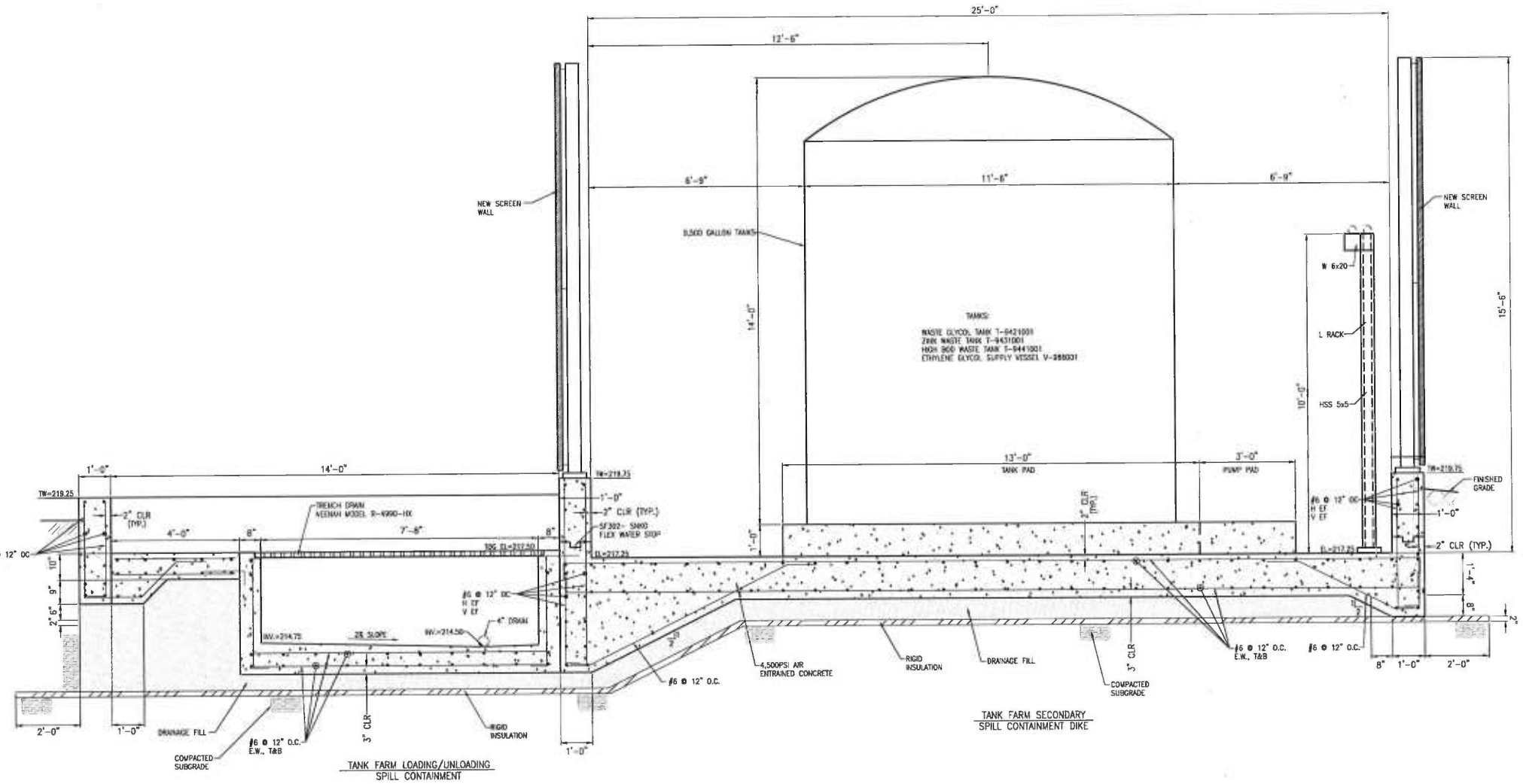

TANK FARM LOADING/UNLOADING
SPILL CONTAINMENT

TANK FARM SECONDARY
SPILL CONTAINMENT DIKE

1 / C-17 TANK FARM SECTION
1/2"=1'-0"

SECONDARY SPILL CONTAINMENT VOLUME CALCULATIONS:

TANK FARM DIKE
DESIGN CRITERIA:
PROVIDE STORAGE VOLUME FOR 110% OF THE LARGEST VESSEL + THE VOLUME OF A 25-YEAR STORM.
25-YEAR STORM = 5.4"
LARGEST VESSEL = 9,500 GAL.

SPILL CONTAINMENT VOLUME REQUIRED:
(9,500GAL*0.134CF/GAL)*(1.1) + [1,675SF *(5.4")*(1'/12")] = 2,154.05CF

SPILL CONTAINMENT VOLUME PROVIDED:
DIKE INSIDE DIMENSIONS = 25'X67' = 1,675SF
TANK PAD VOLUME: [(140'16'+16')+(3)*(140'+16')]*(1') = 640SF
TANK AREA: 4*(11.5'/2)2*(PI) = 415.48SF
AREA WITHIN DIKED WALL FOR STORAGE VOLUME = 1,675-415.48 = 1,259.52SF

HEIGHT OF DIKE WALL REQUIRED (H):
H = (2,154CF + 640CF)/1,259.52SF = 2.22'
AVERAGE BOTTOM ELEVATION = (216.75+217.5)/2 =217.12'
MINIMUM TOP OF DIKE WALL ELEVATION = 217.12 + 2.22 = 219.34'
DIKE WALL TOP ELEVATION PROVIDED = 219.75'
VOLUME STORAGE PROVIDED = (219.75-217.12)*1,259.52 = 3,312.54CF

TANKER TRUCK LOADING/UNLOADING:
DESIGN CRITERIA:
SUPPLY TRUCK PROVIDES SECONDARY SPILL CONTAINMENT (DOUBLE WALL TANKER). PROVIDE SPILL CONTAINMENT FOR THE MOST LIKELY SPILL + 25-YEAR RAINFALL: MOST LIKELY SPILL: PUMP HOSE DISCONNECTS DURING LOADING/UNLOADING OPERATION, SPILL WILL OCCUR UNTIL PUMP IS TURNED OFF. ALL LOADING/UNLOADING OPERATIONS ARE MONITORED. ASSUME PUMP RATE AT 125GPM AND PUMP RUNS UNATTENDED FOR 15 MINUTES.

VOLUME OF CONTAINMENT REQUIRED:
125GPM*15MIN. = 1,875 GAL. = 250CF
VOLUME OF RAINFALL = 784SF*(5.4")*(1'/12") = 353CF
TOTAL STORAGE VOLUME REQUIRED = 250+353 = 603CF

VOLUME OF STORAGE PROVIDED:
UNLOADING PAD AREA = 14'X56' = 784SF
VOLUME OF STORAGE PROVIDED:
TOP OF TRENCH GRATE ELEVATION = 217.75
TOP OF CONTAINMENT WALL = 219.25
STORAGE VOLUME PROVIDED:
[(56'*1.5')/2]*14'+(91.5'*7.67'*3') = 588CF+34.52CF = 622.52CF

NOTE:

1. DRAINAGE FILL: MASSDOT CRUSHED STONE GRADATION M2.01.4.

0 1' 2' 4'
1/2"=1'-0"

FRAMINGHAM PLANNING BOARD ENDORSEMENT

DATE OF ENDORSEMENT

SANOFI

Framingham, MA

KEYPLAN

PROJECT TITLE
8NYA – ICBF
ICBF Project

CONSULTANTS
JACOBS
THREE TOWER BRIDGE
TWO ASH STREET, SUITE 3200
CONSHOHOCKEN, PA. 19428-2074
TEL. 610-239-1000
FAX. 610-239-1100
JACOBS ENGINEERING PROJECT NO. 63RR3101

CURRENT REVISION	B
REVISION DESCRIPTION	Issued for SPA
DESIGN BY: MM	REVISION DATE: 11/28/2016
DRAWN BY: AJW	APPROVED BY: RES

REV	DATE	REVISION HISTORY	DRN	DWN	APP
B	11/28/2016	Issued for SPA	MM	AJW	RES
A	10/28/2016	Issued for Review	MM	MM	RES

CAD FILE
C-17.dwg

SANOFI PROJECT NUMBER	VENDOR JOB NUMBER 63RR3101
SCALE As Noted	VENDOR DRAWING NUMBER 63RR3101/C.C08/0011

SECURITY NOTICE
SANOFI CONFIDENTIAL INFORMATION
USE PURSUANT TO COMPANY INSTRUCTIONS

SHEET TITLE
Civil
CONSTRUCTION DETAILS 7

DOCUMENT TYPE

PRE EDMS NUMBER / REFERENCE DRAWING

DOCUMENT NUMBER
C-17

Nov 30, 2016 - 7:00am C:\SUPOXEN\63RR3101XX\63RR3101CC08\0011\63RR3101XX_C-17.dwg Plotted by Gorbelin

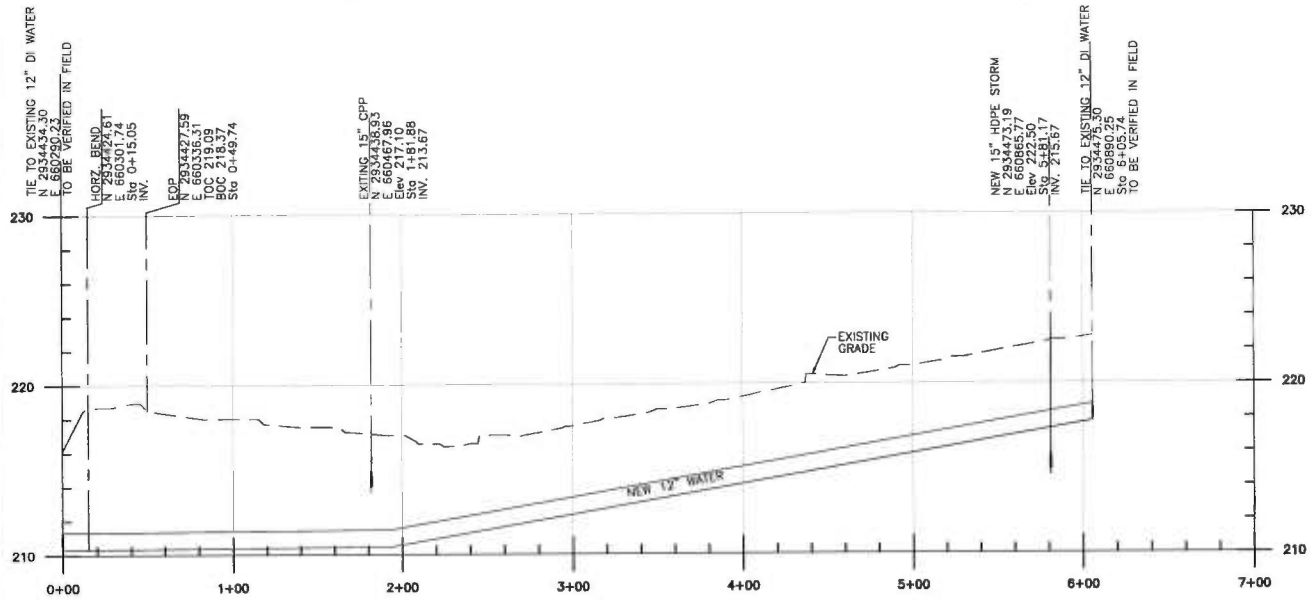

1 WATER LINE 1 PROFILE
C-18 SCALE: 1" = 50'-0"
SCALE: 1"= 5'-0"

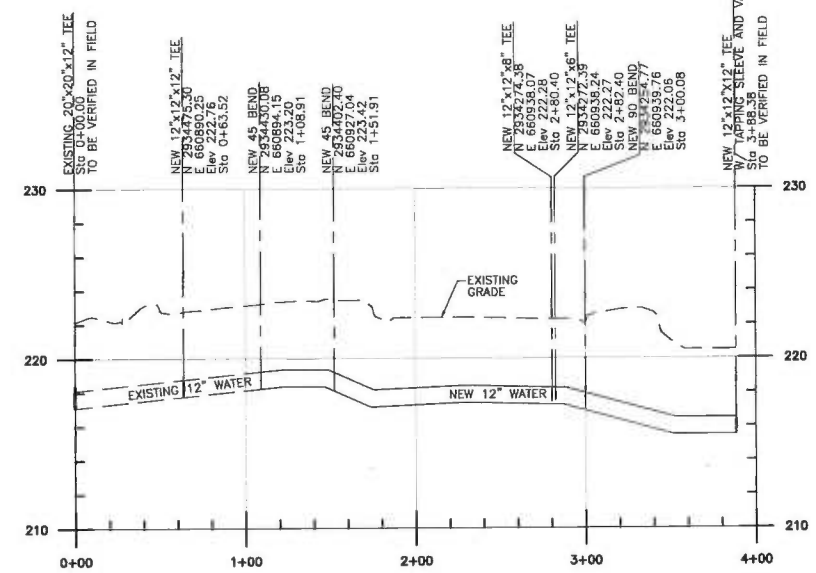

2 WATER LINE 2 PROFILE
C-18 SCALE: 1" = 50'-0"
SCALE: 1"= 5'-0"

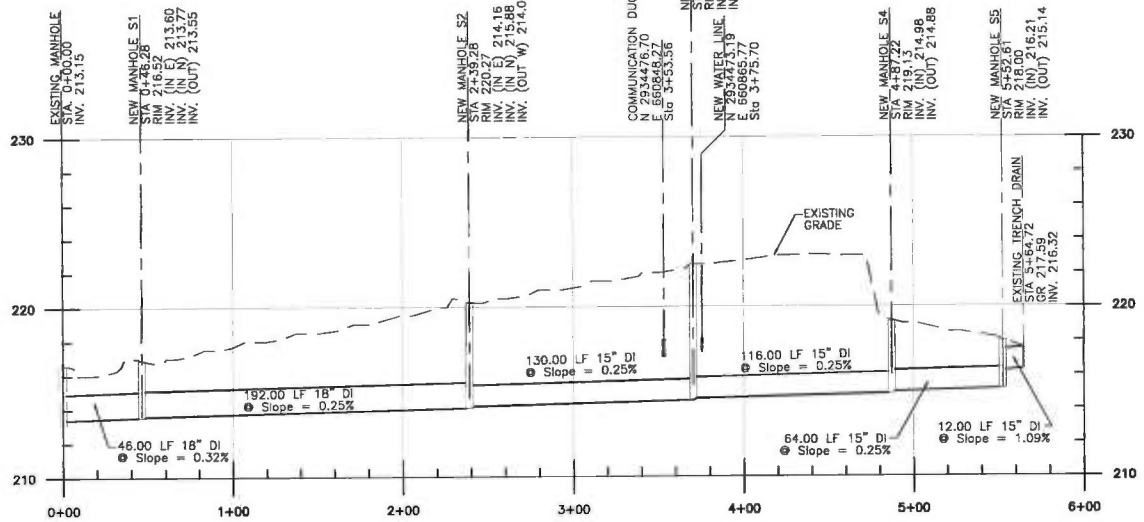

3 STORM DRAIN PROFILE
C-18 SCALE: 1" = 50'-0"
SCALE: 1"= 5'-0"

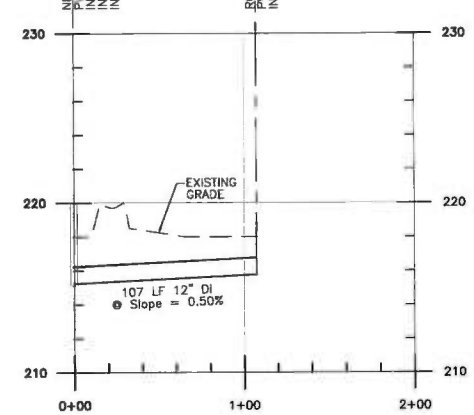

4 STORM DRAIN PROFILE
C-18 SCALE: 1" = 50'-0"
SCALE: 1"= 5'-0"

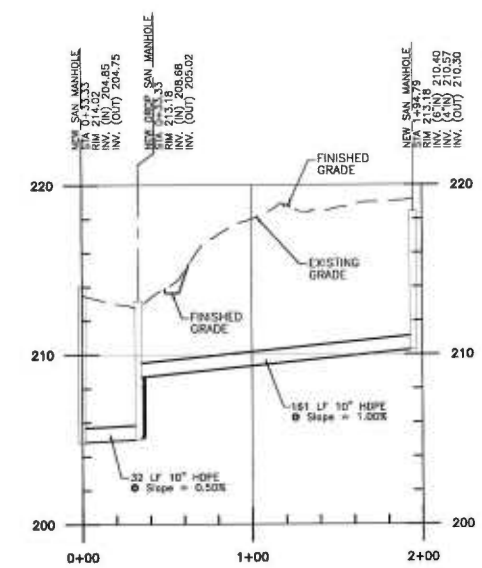

5 SANITARY SEWER PROFILE
C-18 SCALE: 1" = 50'-0"
SCALE: 1"= 5'-0"

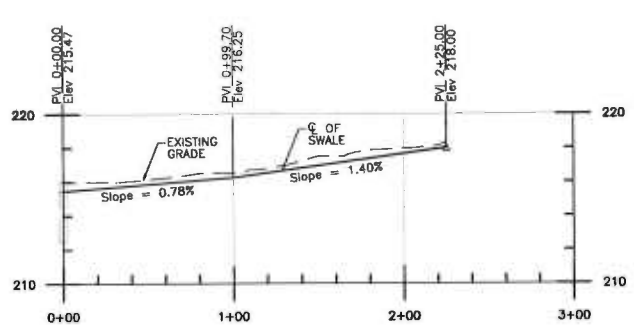

6 SWALE PROFILE
C-18 SCALE: 1" = 50'-0"
SCALE: 1"= 5'-0"

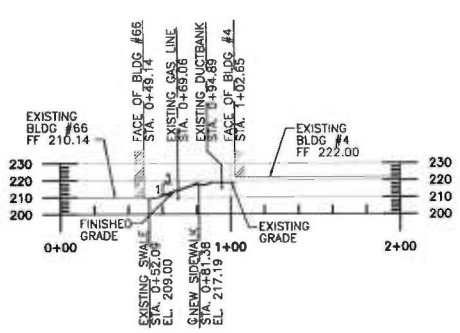

7 WEST SECTION
C-18 HORZ. SCALE: 1" = 50'-0"
VERT. SCALE: 1"= 50'-0"

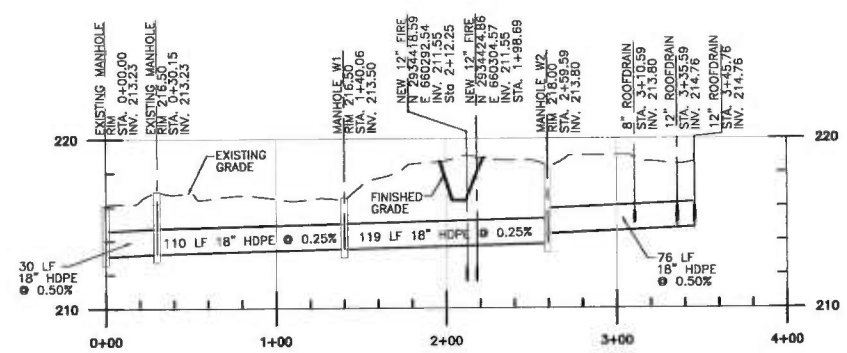

8 STORM DRAIN PROFILE
C-18 SCALE: 1" = 50'-0"
SCALE: 1"= 5'-0"

FRAMINGHAM PLANNING BOARD ENDORSEMENT

DATE OF ENDORSEMENT _____

0 2.5' 5' 10'
1"=5'-0"

0 25' 50' 100'
1"=50'-0"

SANOFI

Framingham, MA

KEYPLAN

PROJECT TITLE
8NYA – ICBF
ICBF Project

CONSULTANTS
JACOBS
JACOBS ENGINEERING PROJECT NO. 63RR3101
THREE TOWER BRIDGE
TWO ASH STREET, SUITE 3000
CONSHOHOCKEN, PA. 19428-2074
TEL. 610-234-1000
FAX. 610-234-1100

CURRENT REVISION	B
REVISION DESCRIPTION	Issued for SPA
DESIGN BY: MM	REVISION DATE: 11/28/2016
DRAWN BY: AJW	APPROVED BY: RES

REV	DATE	REVISION HISTORY	DSN	DRN	APP
B	11/28/2016	Issued for SPA	MM	AJW	RES
A	10/28/2016	Issued for Review	MM	MM	RES

CAD FILE
C-18.dwg

SANOFI PROJECT NUMBER

VENDOR JOB NUMBER
63RR3101

SCALE
As Noted

VENDOR DRAWING NUMBER
63RR3101/C.C08/0018

SECURITY NOTICE
SANOFI CONFIDENTIAL INFORMATION
USE PURSUANT TO COMPANY INSTRUCTIONS

SHEET TITLE
Civil
UTILITY PROFILES

DOCUMENT TYPE

PRE EDMS NUMBER / REFERENCE DRAWING

DOCUMENT NUMBER
C-18

Nov 30, 2016 - 7:08am C:\SANOFI\63RR3101\C\63RR3101XX\63RR3101XX_C-18.dwg Plotted by: Gilmour

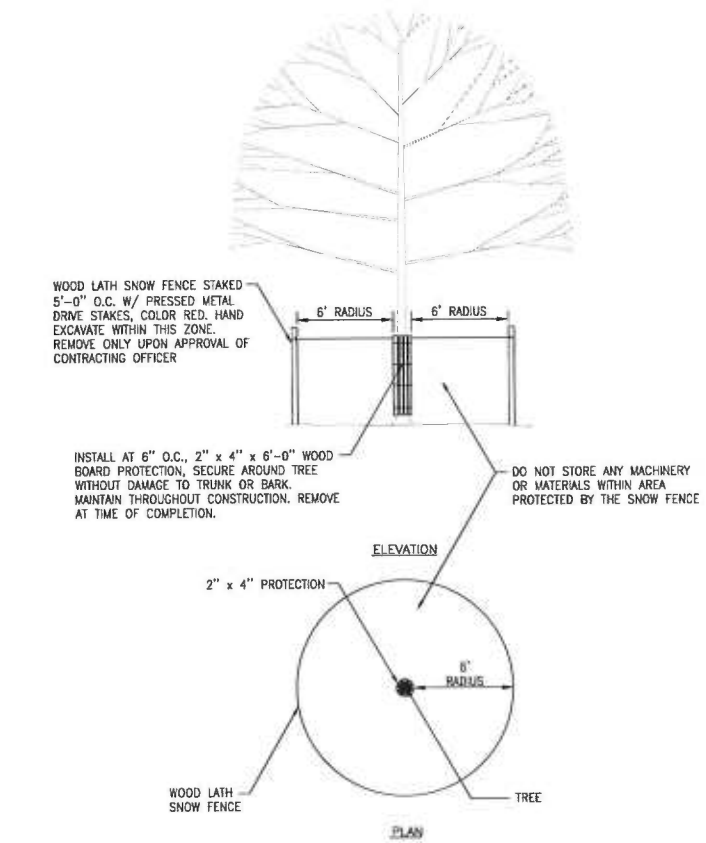

NOTE:
1. USE 2" X 4" BOARD PROTECTION IN AREAS WHERE TREES ARE CLOSER THAN 6' TO EXISTING OR PROPOSED PAVEMENT.

1 / C-19 TREE PROTECTION
N.T.S.

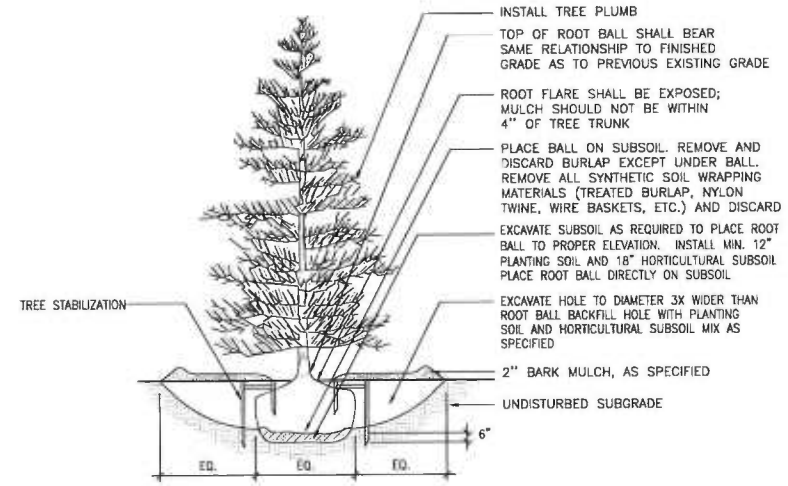

2 / C-19 EVERGREEN TREE PLANTING DETAIL
N.T.S.

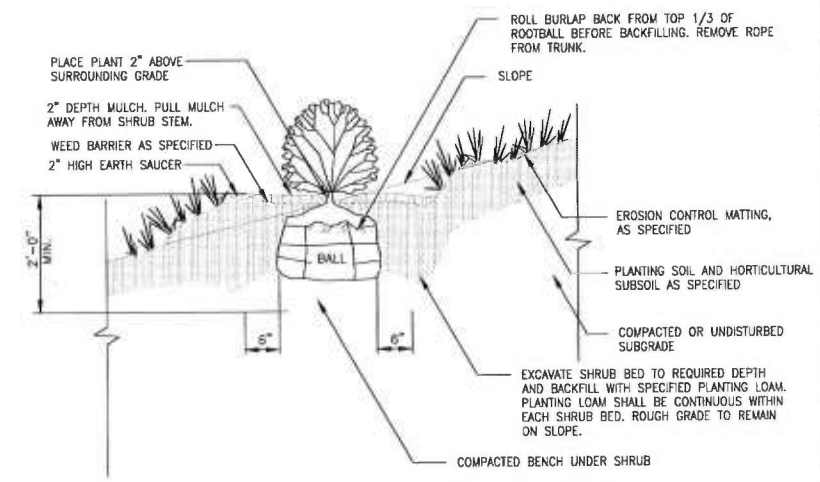

NOTES:
1. ALL SHRUBS SHALL BE FLOODED TWICE DURING FIRST 24 HOURS AFTER PLANTING
2. TREE AND SHRUB BEDS TO RECEIVE 18" LOAM
3. EROSION CONTROL MATTING ON ALL SLOPES 3:1 OR STEEPER
4. RAKE OR HARROW SOIL SURFACE ALONG THE SLOPE TO CREATE A ROUGH GROOVED SURFACE

3 / C-19 SHRUB PLANTING ON SLOPE
N.T.S.

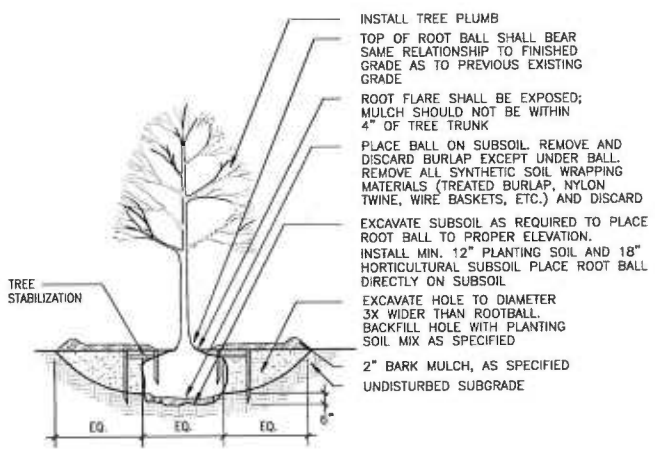

4 / C-19 DECIDUOUS TREE PLANTING DETAIL
N.T.S.

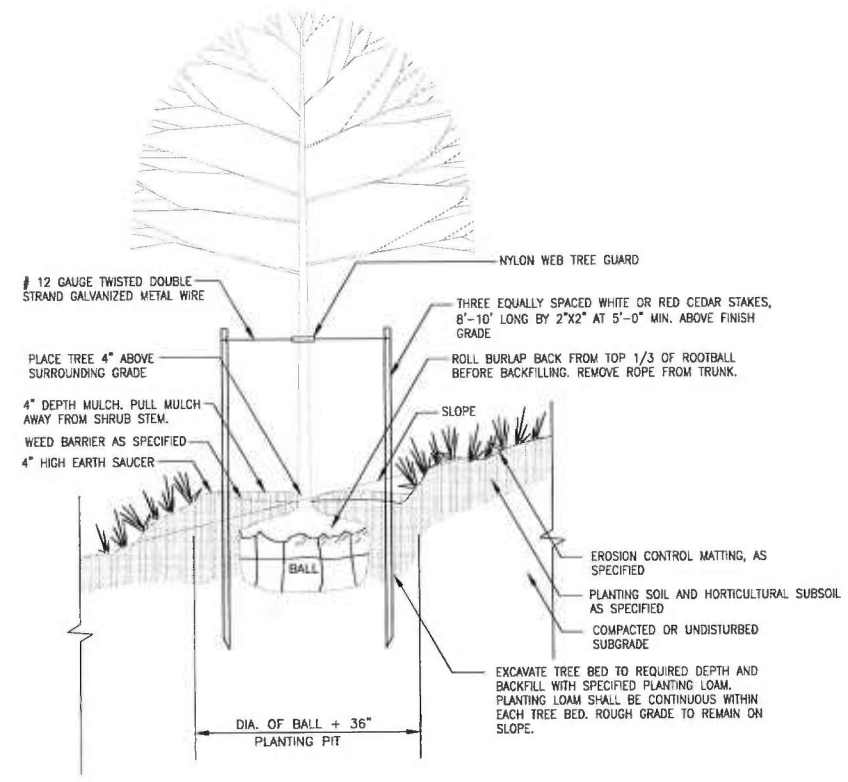

5 / C-19 TREE PLANTING ON SLOPE
N.T.S.

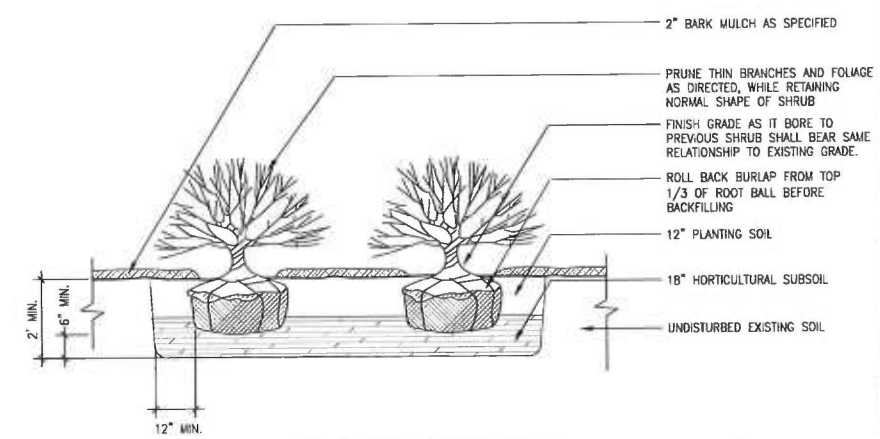

6 / C-19 SHRUB PLANTING DETAIL
N.T.S.

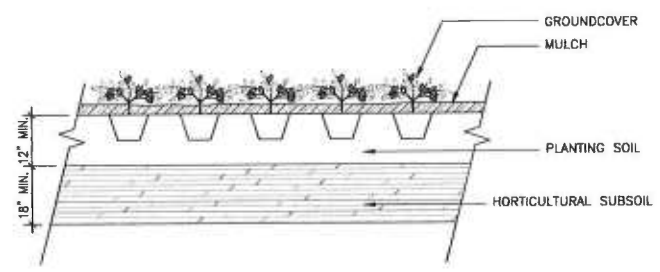

7 / C-19 PERENNIAL AND VINE PLANTING
N.T.S.

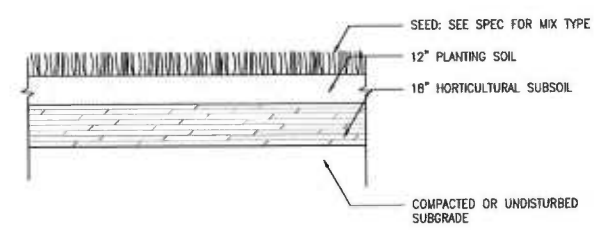

8 / C-19 LAWN AREA
N.T.S.

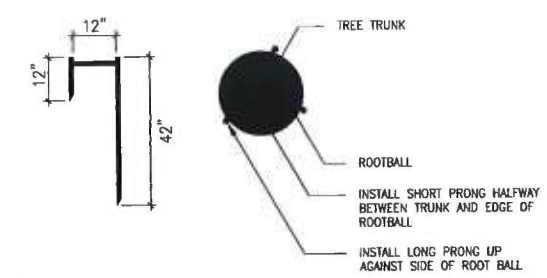

NOTE:
1. PROVIDE THREE STAPLES PER TREE.
2. CONTRACTOR TO VERIFY THE LOCATION OF UTILITIES AND PIPES BEFORE DRIVEN STAPLE INTO THE GROUND.

9 / C-19 TREE STABILIZATION
N.T.S.

FRAMINGHAM PLANNING BOARD ENDORSEMENT

DATE OF ENDORSEMENT _____

SANOFI

Framingham, MA

KEYPLAN

PROJECT TITLE
8NYA – ICBF
ICBF Project

CONSULTANTS
JACOBS
THREE TOWER BRIDGE
TWO ASH STREET, SUITE 3000
CONSHOHOCKEN, PA 19428-2974
TEL 610-239-1000
FAX 610-239-1100
JACOBS ENGINEERING PROJECT NO. 63RR3101

CURRENT REVISION	A
REVISION DESCRIPTION	Issued for SPA
DESIGN BY MM	REVISION DATE 11/28/2016
DRAWN BY AJW	APPROVED BY RES

REV	DATE	REVISION HISTORY	DSN	DWN	APP
A	11/28/2016	Issued for SPA	MM	AJW	RES

CAD FILE
C-19.dwg

SANOFI PROJECT NUMBER
VENDOR JOB NUMBER
63RR3101

SCALE
As Noted

VENDOR DRAWING NUMBER
63RR3101/C.C08/0019

SECURITY NOTICE
SANOFI CONFIDENTIAL INFORMATION
USE PURSUANT TO COMPANY INSTRUCTIONS

SHEET TITLE
Civil
LANDSCAPE DETAILS

DOCUMENT TYPE

PRE EDMS NUMBER / REFERENCE DRAWING

DOCUMENT NUMBER
C-19

Nov 30, 2016 - 7:08am C:\SANOFI\63RR3101XX\63RR3101\C08\DWG\BA\63RR3101_C-19.dwg Pablo Gimbelm

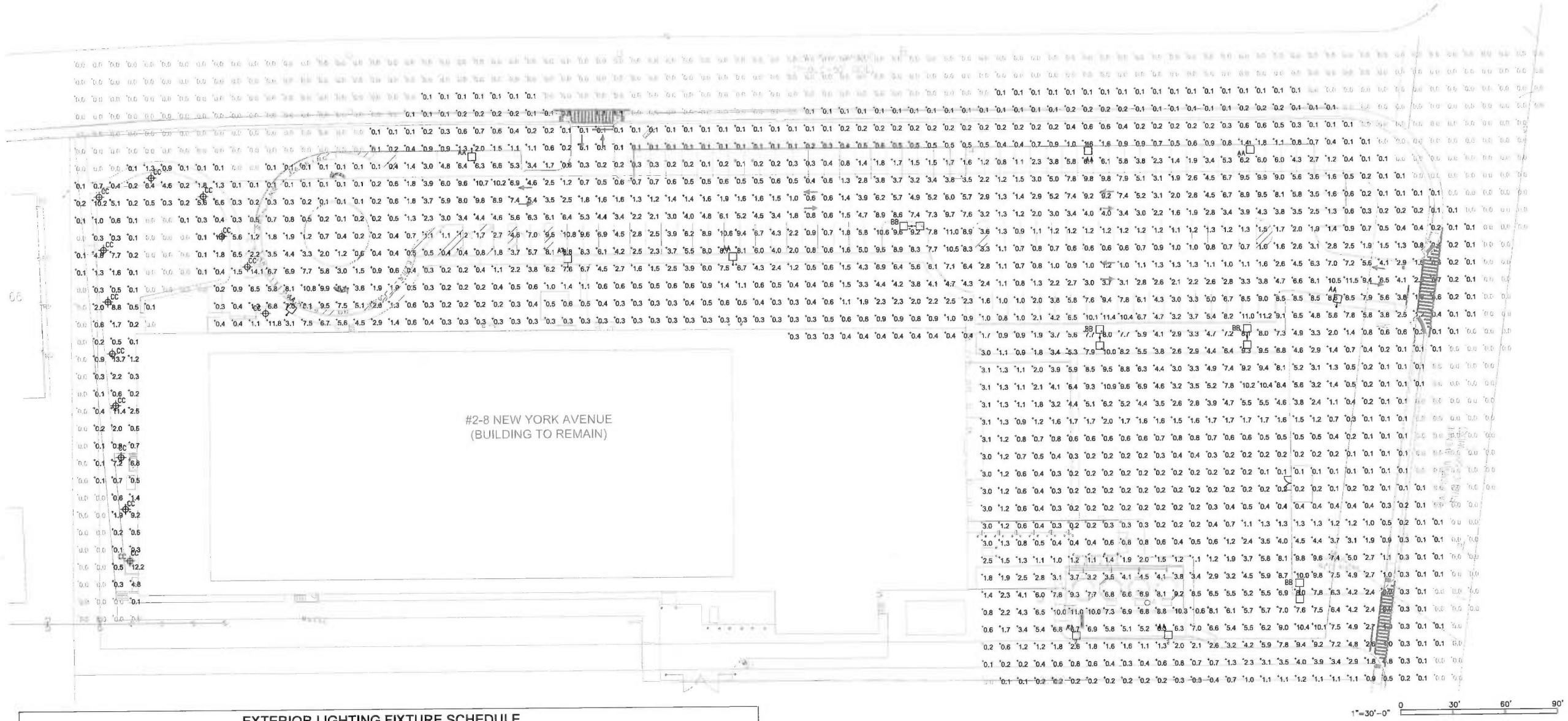

EXTERIOR LIGHTING FIXTURE SCHEDULE

FIXT. TYPE & SYMBOL	MANUFACTURER	CATALOG NO.	VOLTS	NO. OF LAMPS	LAMP TYPE	MOUNTING	DESCRIPTION
AA	GARDCO	P32-A1-1-4-210LA-CW-UNIV	277	-	210W LED	20' POLE	SINGLE ARM LED FIXTURE. TYPE IV ASYMETRICAL DISTRIBUTION.
BB	GARDCO	P32-A1-2-4-210LA-CW-UNIV	277	-	210W LED	20' POLE	DOUBLE ARM LED FIXTURE. TYPE IV ASYMETRICAL DISTRIBUTION.
CC	BETA LED	PWY-EDG-XX-P4-02D-27-350	277	-	22W LED	3'-6" POST-TOP BOLLARD	LED BOLLARD FIXTURE. MATCH GENZYME BOLLARD STANDARD

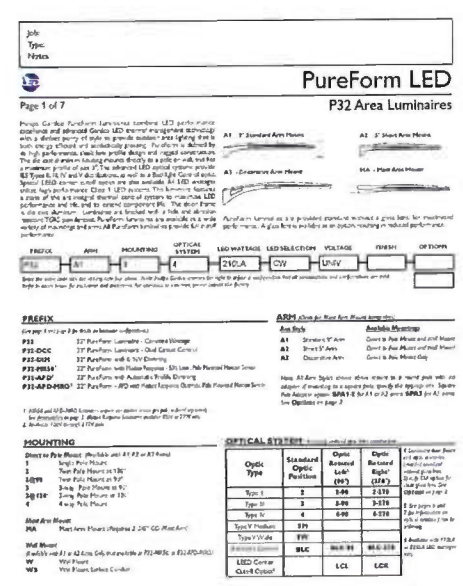

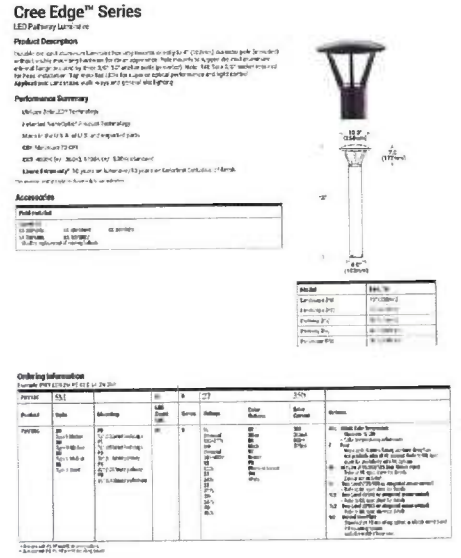

FRAMINGHAM PLANNING BOARD ENDORSEMENT

DATE OF ENDORSEMENT _____

SANOFI

Framingham, MA

KEYPLAN

PROJECT TITLE

8NYA – ICBF
ICBF Project

CONSULTANTS

JACOBS

JACOBS ENGINEERING PROJECT NO. 63RR2101

CURRENT REVISION	B
REVISION DESCRIPTION	Issued for SPA
DESIGN BY: JM	REVISION DATE: 11/28/2016
DRAWN BY: JM	APPROVED BY: RES

REV	DATE	REVISION HISTORY	DSN	DRN	APP
B	11/28/2016	Issued for SPA	JM	JM	RES
A	10/28/2016	Issued for Review	JM	JM	RES

CAD FILE: E-1.DWG

SANOFI PROJECT NUMBER

VENDOR JOB NUMBER: 63RR3101

SCALE: 1"=30'

VENDOR DRAWING NUMBER: 63RR3101/E.E01/0008

SECURITY NOTICE

SANOFI CONFIDENTIAL INFORMATION
USE PURSUANT TO COMPANY INSTRUCTIONS

SHEET TITLE

Electrical
LIGHTING PLAN

DOCUMENT TYPE

PRE EDMS NUMBER / REFERENCE DRAWING

DOCUMENT NUMBER

E-1

Nov 30, 2016 - 6:58am C:\PROJECTS\63RR3101\EE01\DGN\63RR3101_E01.DWG Plotted by Gentzkow

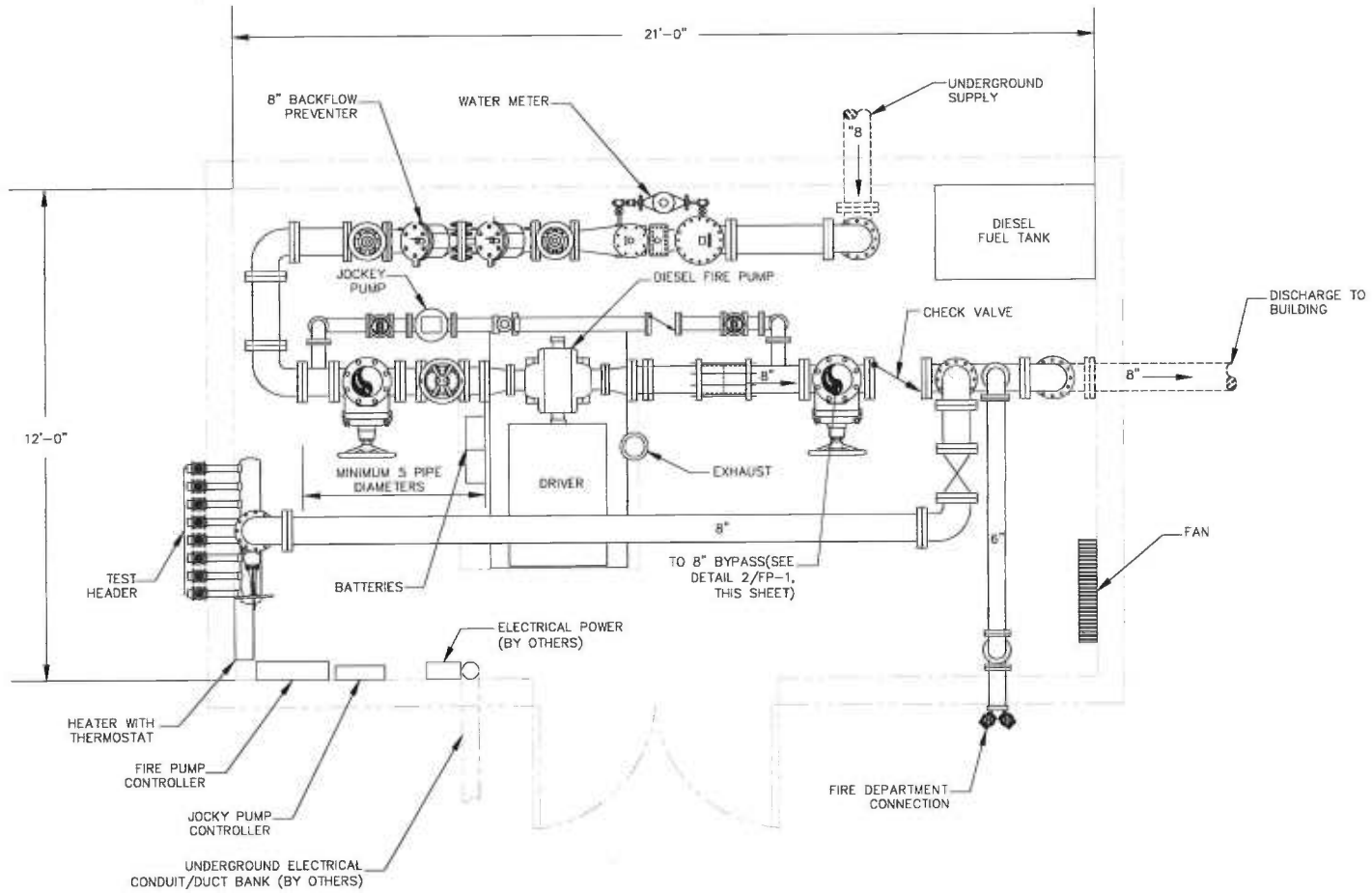

1 FP-1 PLAN VIEW
SCALE 1/2" = 1'-0"

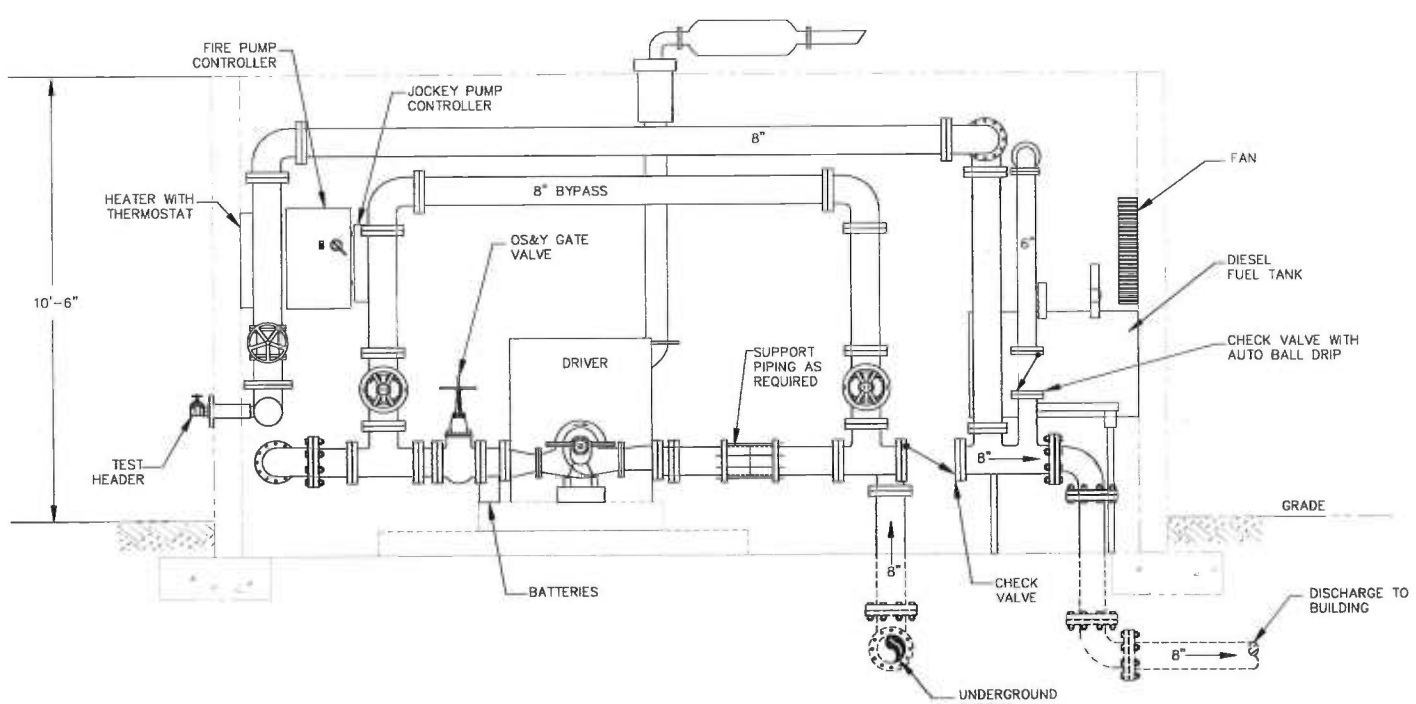

2 FP-1 ELEVATION VIEW
SCALE 1/2" = 1'-0"

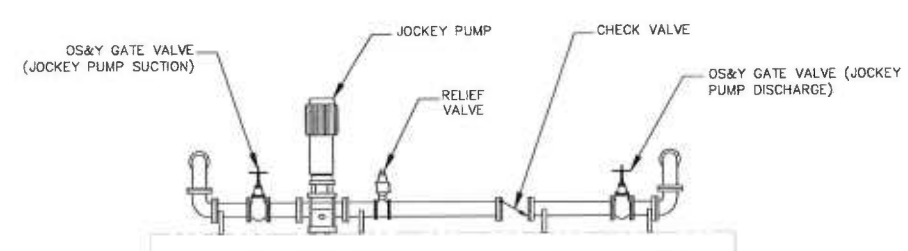

3 FP-1 ELEVATION VIEW OF JOCKEY PUMP LINE
SCALE 1/2" = 1'-0"

GENERAL NOTES:

1. MATERIALS, INSTALLATION, AND PERFORMANCE SHALL COMPLY WITH NFPA 20, FM GLOBAL, AND SANOFI REQUIREMENTS.

SANOFI

Framingham, MA

KEYPLAN

PROJECT TITLE
8NYA – ICBF
ICBF Project

CONSULTANTS
JACOBS
THREE TOWER BRIDGE
700 ASH STREET, SUITE 3200
CONSHOHOCKEN, PA, 19428-2274
TEL: 610-334-1000
FAX: 610-334-1100
JACOBS ENGINEERING PROJECT NO. 63RR3101

CURRENT REVISION	A
REVISION DESCRIPTION	Issued for SPA
DESIGN BY: RES	REVISION DATE: 11/28/2016
DRAWN BY: HA	APPROVED BY: RES

REV	DATE	REVISION HISTORY	DSN	DRN	APP
A	11/28/2016	Issued for SPA	RES	HA	RES

CAD FILE
FP-1.DWG

SANOFI PROJECT NUMBER	VENDOR JOB NUMBER
	63RR3101
SCALE: As Noted	VENDOR DRAWING NUMBER: 63RR3101/F.F05/0001

SECURITY NOTICE
SANOFI CONFIDENTIAL INFORMATION
USE PURSUANT TO COMPANY INSTRUCTIONS

SHEET TITLE
Fire Protection
Fire Pump Enclosure

DOCUMENT TYPE

PRE EDMS NUMBER / REFERENCE DRAWING

DOCUMENT NUMBER
FP-1

Nov 30, 2016 - 2:21pm C:\SYPORB\SERR3101X\63RR3101\FP\DGN\63RR3101X_FP-1.DWG Plotted by: Chisholm

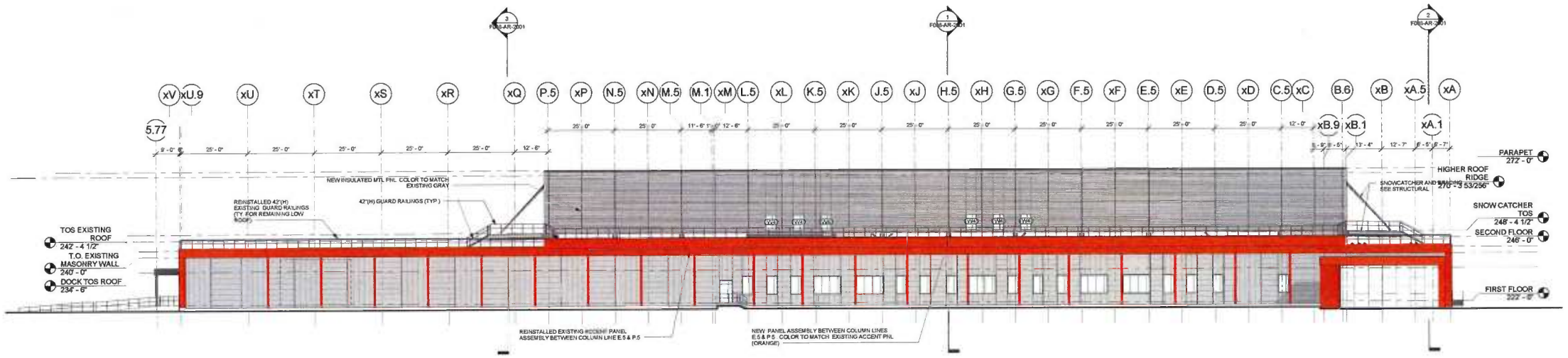

1 NORTH ELEVATION
1/16" = 1'-0"

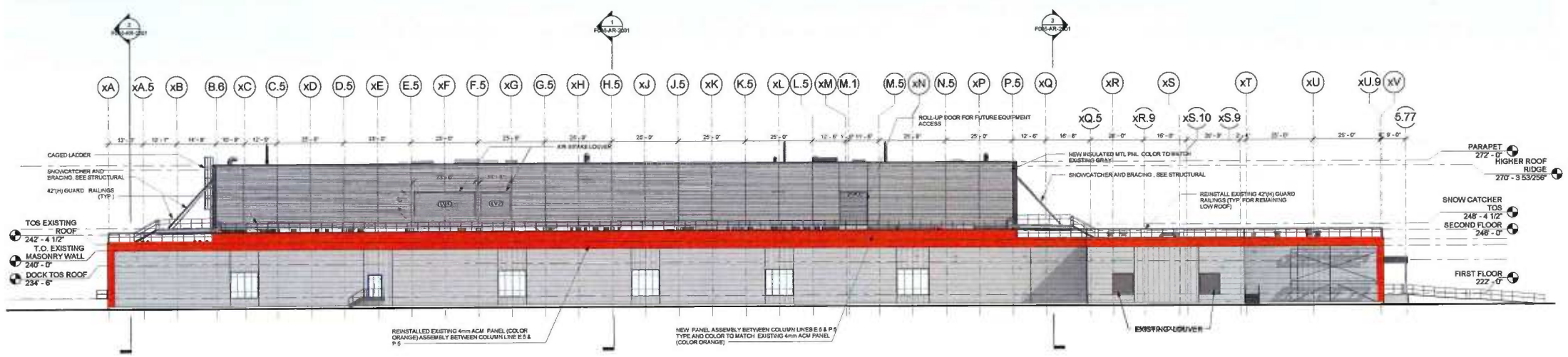

2 SOUTH ELEVATION
1/16" = 1'-0"

SANOFI

Framingham, MA

KEY PLAN

BNYA - ICBF

JACOBS

Designer	11/28/16
SRS	TNB

REV	DATE	REVISION NOTICE	DSN	DWN	APP
B	11/28/16	Issued for SPA	SRS	TNB	
A	10/28/16	Issued for Review	SRS	TNB	

SANOFI PROJECT NUMBER	VENDOR JOB NUMBER 63RR3101
SCALE As indicated	VENDOR DRAWING NUMBER A-1

SECURITY NOTICE

SANOFI CONFIDENTIAL INFORMATION
USE PURSUANT TO COMPANY INSTRUCTIONS

Architectural
Building Elevations - Sheet 1

DOCUMENT TYPE

PRE DWG NUMBER / REFERENCE DRAWING

DOCUMENT NUMBER
A-1

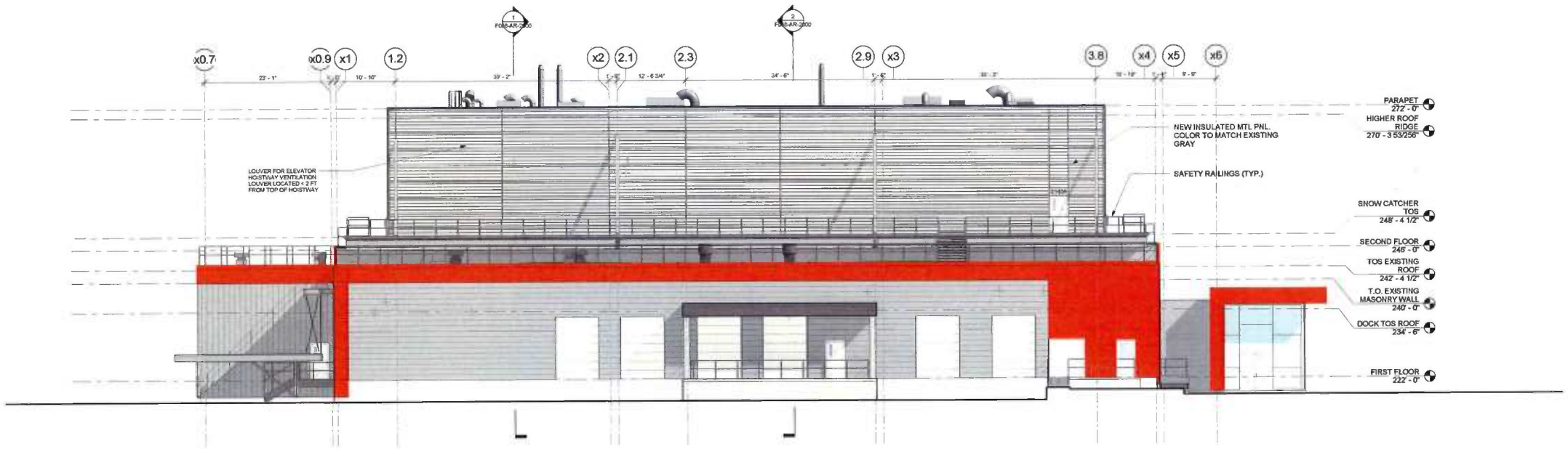

1 EAST ELEVATION
1/8" = 1'-0"

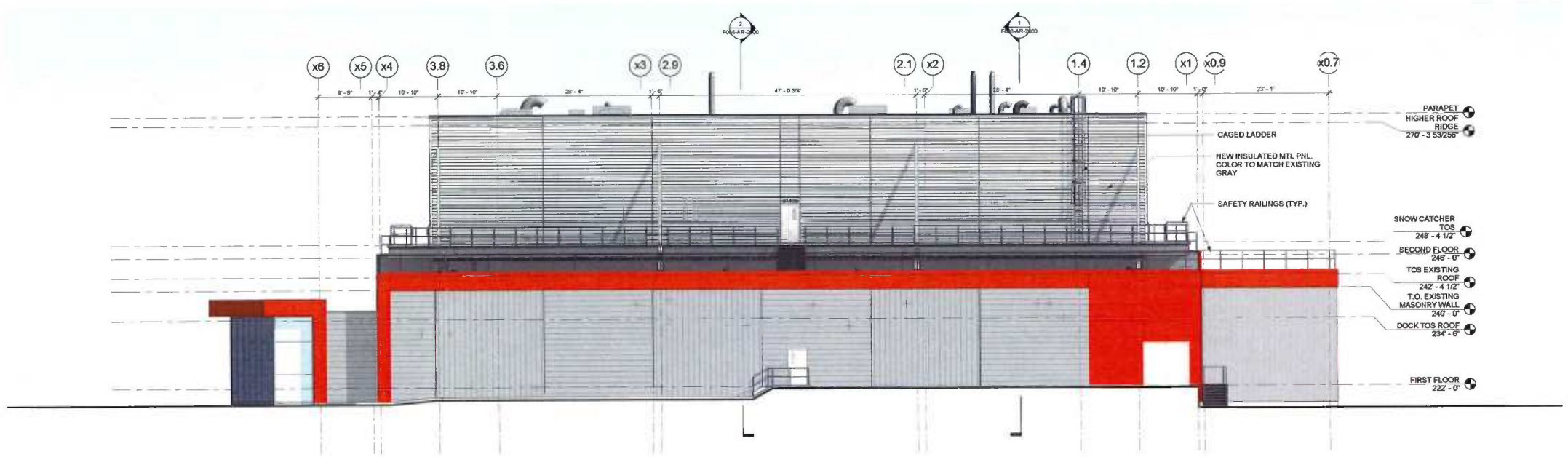

2 WEST ELEVATION
1/8" = 1'-0"

SANOFI

Framingham, MA

KEY PLAN

8NYA - ICBF

JACOBS

Revision Description: Issued for SPA	
Design By: Designer	Revision Date: 11/28/16
Drawn By:	Approved By: TNB

REV	DATE	REVISION HISTORY	DSN	DWN	APP
B	11/28/16	Issued for SPA		SRS	TNB
A	10/28/16	Issued for Review		SRS	TNB

CAD FILE

SANOFI PROJECT NUMBER	VENDOR JOB NUMBER 63RR3101
SCALE As indicated	VENDOR DRAWING NUMBER A-2

SECURITY NOTICE

SANOFI CONFIDENTIAL INFORMATION
USE PURSUANT TO COMPANY INSTRUCTIONS

Architectural
Building Elevations - Sheet 2

DOCUMENT TYPE

PRE-ENG NUMBER / REFERENCE DRAWING

DOCUMENT NUMBER
A-2