FRONT ENTRY

NRD national restaurant designers ARCHITECTS & ENGINEERS A division of LMHT Associates, P.A.	IHOP®	**IHOP Framingham, MA** ::		
		MAY 10, 2016 ::	NRD Project # 16173 ::	A ::

RIGHT SIDE

NRD national restaurant designers ARCHITECTS & ENGINEERS A division of LMHT Associates, P.A.	IHOP	**IHOP Framingham, MA ::**		
		MAY 10, 2016 ::	NRD Project # 16173 ::	B ::

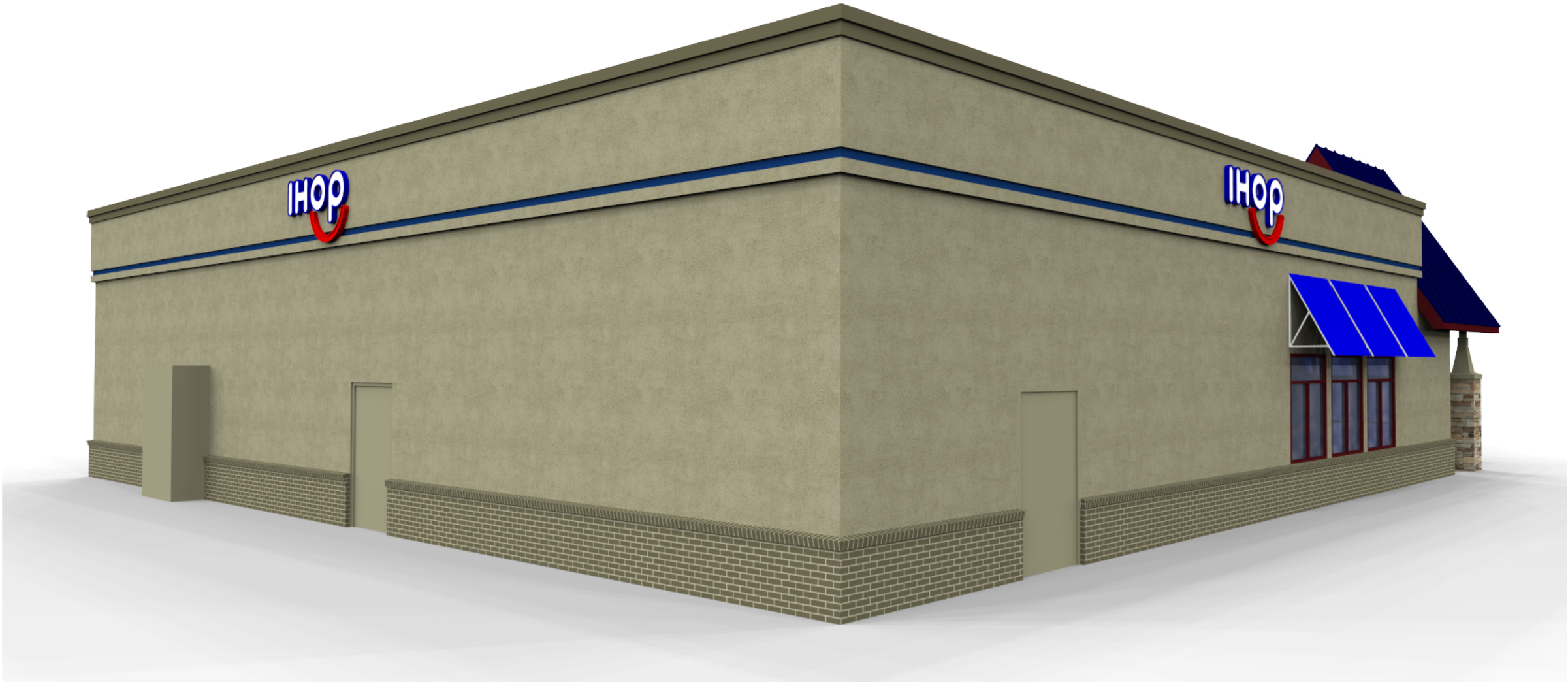

LEFT SIDE

NRD national restaurant designers ARCHITECTS & ENGINEERS A division of LMHT Associates, P.A.	IHOP	**IHOP Framingham, MA ::**		
		MAY 10, 2016 ::	NRD Project # 16173 ::	C ::

REAR

NRD national restaurant designers ARCHITECTS & ENGINEERS A division of LMHT Associates, P.A.	IHOP	**IHOP Framingham, MA ::**		
		MAY 10, 2016 ::	NRD Project # 16173 ::	D ::

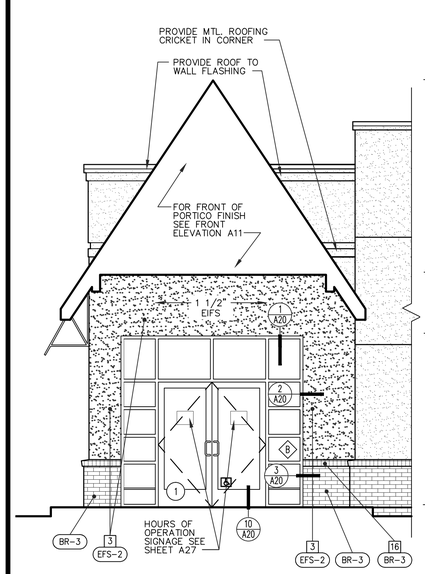

ENTRY ELEVATION

SCALE: 1/4" = 1'-0"

3

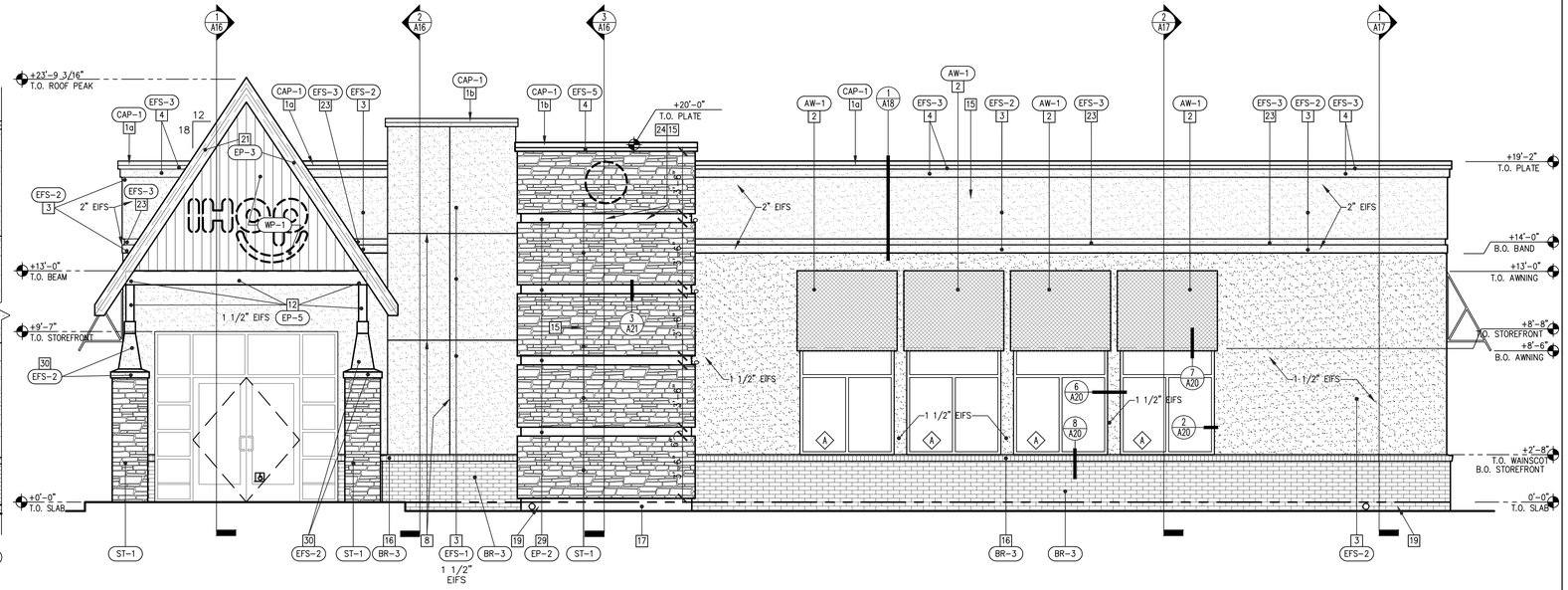

FRONT ELEVATION

SCALE: 1/4" = 1'-0"

1

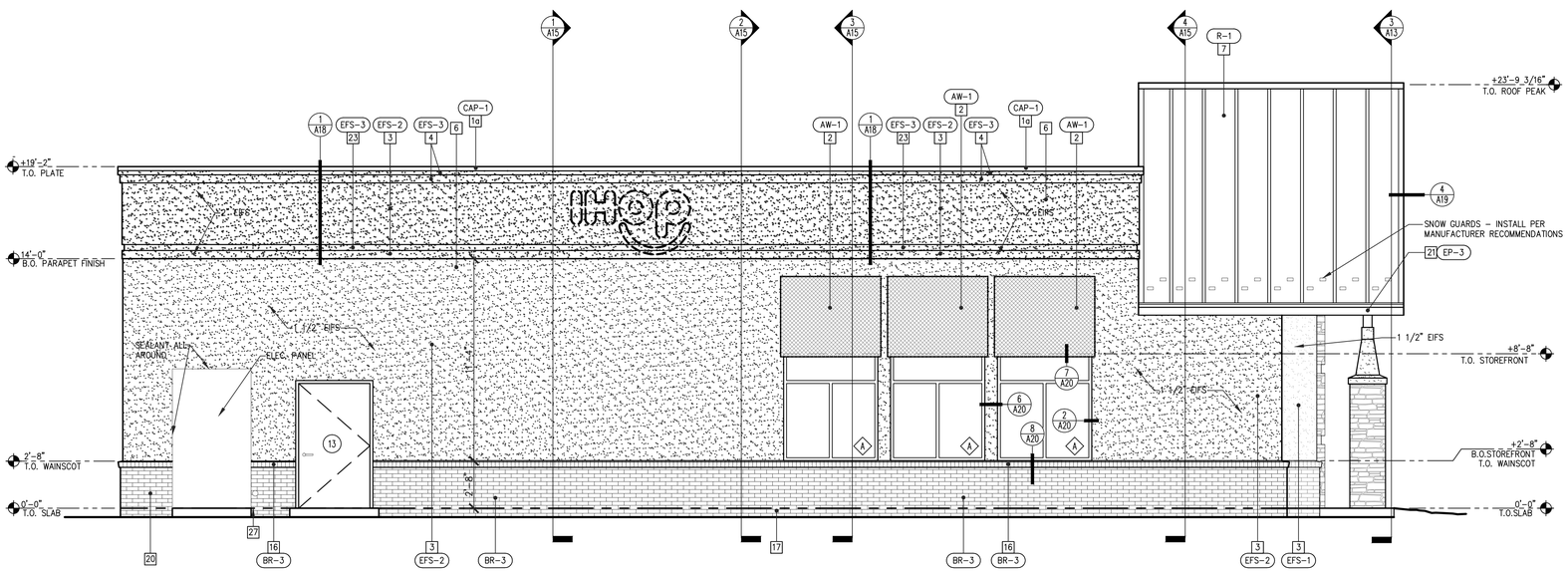

LEFT ELEVATION

SCALE: 1/4" = 1'-0"

2

SHEET NOTES

1a GSM CAP FLASHING, FACTORY PAINTED COLOR MATCH EP-6

1b GSM CAP FLASHING, FACTORY PAINTED COLOR MATCH EP-3

1c GSM EDGE FLASHING, FACTORY PAINTED COLOR R-1

2 AWNING, SEE SHEET A6 COLOR SCHEDULE AND SHEET A25 FOR DETAILS.

3 E.I.F.S. WITH SAND FLOAT TEXTURED.

- o E.I.F.S. THICKNESS OF EPS VARIES INSTALL PER MANUF. RECOMMENDATIONS
- o PROVIDE FLUID APPLIED WATER BARRIER ON EXT. PLYWOOD
- o E.I.F.S. 350+ INCH LBS. IMPACT MESH FROM T.O. SLAB TO 8'-0" A.F.F. INCLUDING AROUND ALL CORNICES. (U.O.N.)

4 E.I.F.S SHAPED TRIM, SEE DETAILS FOR TRIM SIZES.

5 PAINT TO MATCH ADJACENT FINISH

6 LINE OF ROOF DECK BEYOND.

7 STANDING SEAM METAL ROOF.

8 3/4" "V" GROOVE REVEAL SEE DET. 7/A21

9 INTERNATIONAL SYMBOL OF ACCESSIBILITY – LOCATION PER LOCAL CODE REQUIREMENTS.

10 ALUMINUM STOREFRONT, SEE SHEET A7 FOR FINISH

11 E.F.I.S. REVEAL – SEE DETAIL 2/A21

12 WOOD COLUMN OR BEAM.

13 MAIN SWITCHBOARD – FINISH BEHIND TO BE 1" E.I.F.S. (EFS-2) PAINT MAIN SWITCHBOARD (EP-5)

LOCATION OF MAIN SWITCHBOARD SHALL BE MOVED TO MATCH TRANSFORMER LOCATION.

14 LIGHTING WALL PACK @ 9'-0" A.F.F.

15 SIGNAGE, VERIFY WITH OWNER FOR EXACT SIZE. ALL SIGNAGE UNDER SEPARATE PERMIT. LOCATION, SIZE, & TYPE OF "IHOP" SIGN WHERE OCCURS TO BE COORDINATED WITH SIGN CONTRACTOR.

16 BRICK ROWLOCK SILL.

17 DRY PACK & RUBBED CONCRETE FOUNDATION. PAINT TO MATCH MATERIAL ABOVE.

18 KNOX BOX LOCATION, VERIFY WITH LOCAL FIRE DEPT.

19 ROOF DRAIN, CONNECT TO STORM DRAIN SYSTEM OR DAYLIGHT TO FACE OF CURB. VERIFY SITE REQUIREMENTS.

20 OVERFLOW DRAIN WITH 1" PVC PROJECTION.

21 FASCIA/WOOD TRIM, SEE FINISH SCHEDULE SHEET A6

22 HOLLOW METAL DOOR AND FRAME, SEE FINISH SCHEDULE SHEET A6

23 4" WIDE X 1" DEEP REVEAL.

24 PROVIDE METAL BIRD STOP CLOSURE @ REVEAL & CAN (BOTH ENDS OF SIGN)

25 GSM GUTTER, FACTORY FINISHED TO MATCH EP-1.

26 GSM DOWNSPOUT, PAINT TO MATCH ADJACENT SURFACE. DISCHARGE DOWN SPOUT INTO DOWNSPOUT ADAPTER AND DAYLIGHT TO CURB OR INTO STORM SEWER.

27 LINE OF FOUNDATION – SEE STRUCTURAL DRAWINGS.

28 GRADE SHOWN HERE AS LEVEL BUT WILL ACTUALLY VARY BELOW THIS LINE AS SITE CONDITIONS REQUIRE. SEE SITE PLAN FOR ACTUAL GRADES.

29 6" GALV. PILASTER REVEAL, FRYE # DCS-625-600, PAINTED

30 E.I.F.S. SHAPED PILASTER SEE DET. 3/A13

31 NOT USED

GENERAL NOTES

SEE FINISH SCHEDULE ON SHEET A6 FOR FINISH SPEC. & COLORS.

ROOF EQUIPMENT WILL BE SCREENED FROM VIEW ON THE SURROUNDING STREETS & FREEWAYS.

GENERAL CONTRACTOR TO PROVIDE FOR PROPER GAUGE GUTTER, ATTACHMENTS, AND RAIN WATER LEADERS FROM GUTTER, RUN TO COMPLY WITH APPLICABLE CODES AND ORDINANCES

Project No. 16173

NRD national restaurant designers
ARCHITECTS & ENGINEERS
2805 Meridian Parkway Durham, NC 27713
ph: 919 544 7251 fax: 919 544 9399
A Division of LMHT Associates

Revisions

THESE DRAWINGS ARE THE PROPERTY OF IHOP CORPORATION 525 NORTH BRAND BLVD. 3rd FLOOR GLENDALE, CA 91203-1903 AND CANNOT BE COPIED OR REPRODUCED WITHOUT THE EXPRESS WRITTEN PERMISSION FROM THE OWNER.

IHOP ICON 3.1 PROTOTYPE
LEFT HAND ENTRY

Project location:
17 EDGELL RD.
FRAMINGHAM, MA 01701

Date 6/15/16

SHEET DATA:
EXTERIOR ELEVATIONS

Drawn By | Checked By

Sheet No.
A11

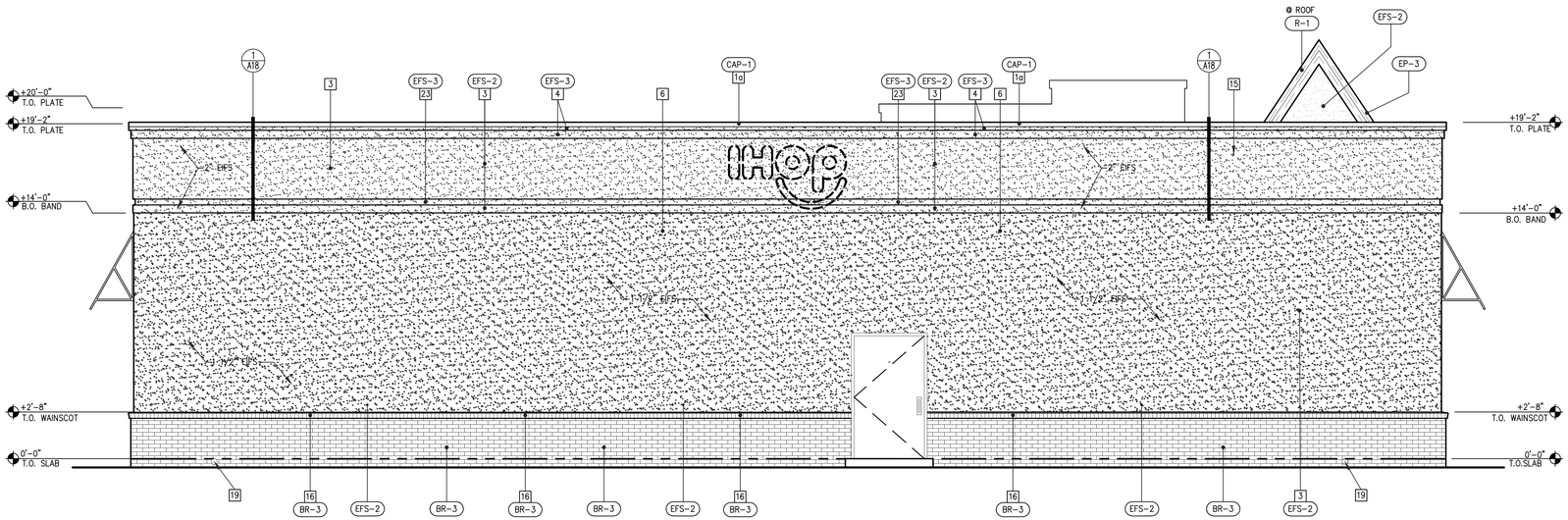

REAR ELEVATION

SCALE: 1/4" = 1'-0"

1

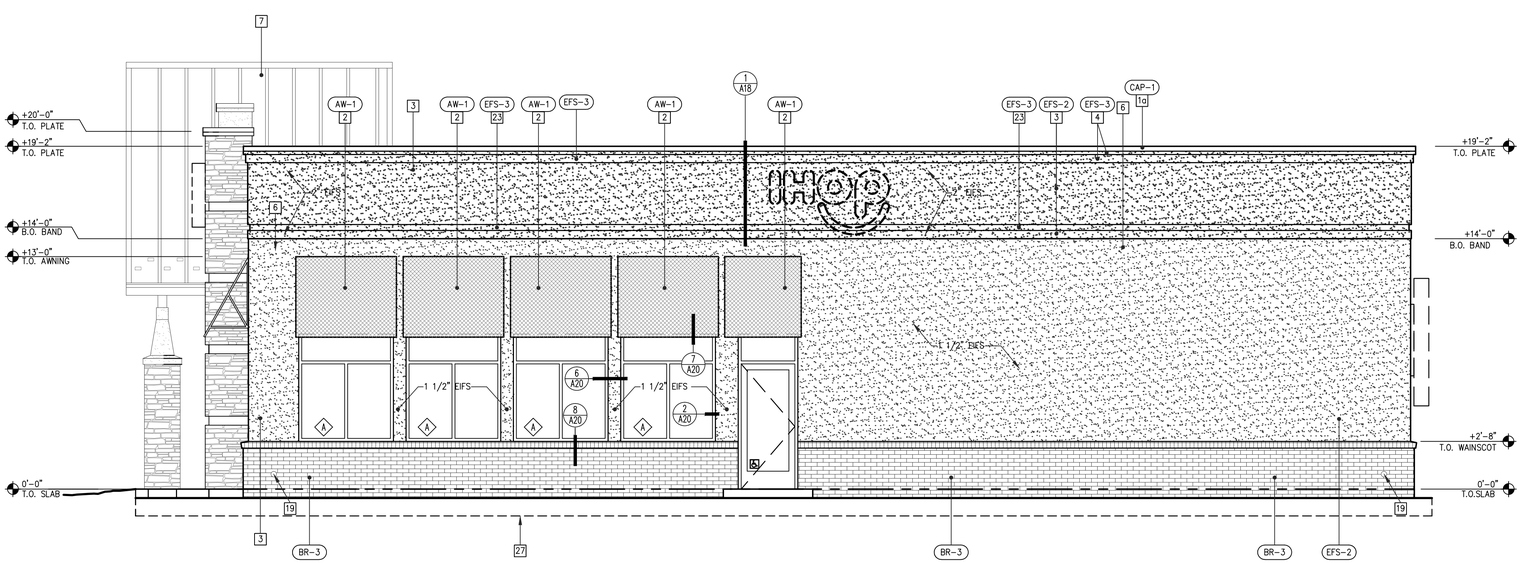

RIGHT ELEVATION

SCALE: 1/4" = 1'-0"

2

SHEET NOTES

1a GSM CAP FLASHING, FACTORY PAINTED COLOR MATCH EP-6

1b GSM CAP FLASHING, FACTORY PAINTED COLOR MATCH EP-3

1c GSM EDGE FLASHING, FACTORY PAINTED COLOR R-1

2 AWNING, SEE SHEET A6 COLOR SCHEDULE AND SHEET A25 FOR DETAILS.

3 E.I.F.S. WITH SAND FLOAT TEXTURED.

- o E.I.F.S. THICKNESS OF EPS VARIES INSTALL PER MANUF. RECOMMENDATIONS
- o PROVIDE FLUID APPLIED WATER BARRIER ON EXT. PLYWOOD
- o E.I.F.S. 350+ INCH LBS. IMPACT MESH FROM T.O. SLAB TO 8'-0" A.F.F. INCLUDING AROUND ALL CORNICES. (U.O.N.)

4 E.I.F.S SHAPED TRIM, SEE DETAILS FOR TRIM SIZES.

5 PAINT TO MATCH ADJACENT FINISH

6 LINE OF ROOF DECK BEYOND.

7 STANDING SEAM METAL ROOF.

8 3/4" "V" GROOVE REVEAL SEE DET. 7/A21

9 INTERNATIONAL SYMBOL OF ACCESSIBILITY – LOCATION PER LOCAL CODE REQUIREMENTS.

10 ALUMINUM STOREFRONT, SEE SHEET A7 FOR FINISH

11 E.F.I.S. REVEAL – SEE DETAIL 2/A21

12 WOOD COLUMN OR BEAM.

13 MAIN SWITCHBOARD – FINISH BEHIND TO BE 1" E.I.F.S. (EFS-2) PAINT MAIN SWITCHBOARD (EP-5)

LOCATION OF MAIN SWITCHBOARD SHALL BE MOVED TO MATCH TRANSFORMER LOCATION.

14 LIGHTING WALL PACK @ 9'-0" A.F.F.

15 SIGNAGE, VERIFY WITH OWNER FOR EXACT SIZE. ALL SIGNAGE UNDER SEPARATE PERMIT. LOCATION, SIZE, & TYPE OF "IHOP" SIGN WHERE OCCURS TO BE COORDINATED WITH SIGN CONTRACTOR.

16 BRICK ROWLOCK SILL.

17 DRY PACK & RUBBED CONCRETE FOUNDATION. PAINT TO MATCH MATERIAL ABOVE.

18 KNOX BOX LOCATION, VERIFY WITH LOCAL FIRE DEPT.

19 ROOF DRAIN, CONNECT TO STORM DRAIN SYSTEM OR DAYLIGHT TO FACE OF CURB. VERIFY SITE REQUIREMENTS.

20 OVERFLOW DRAIN WITH 1" PVC PROJECTION.

21 FASCIA/WOOD TRIM, SEE FINISH SCHEDULE SHEET A6

22 HOLLOW METAL DOOR AND FRAME, SEE FINISH SCHEDULE SHEET A6

23 4" WIDE X 1" DEEP REVEAL.

24 PROVIDE METAL BIRD STOP CLOSURE @ REVEAL & CAN (BOTH ENDS OF SIGN)

25 GSM GUTTER, FACTORY FINISHED TO MATCH EP-1.

26 GSM DOWNSPOUT, PAINT TO MATCH ADJACENT SURFACE. DISCHARGE DOWN SPOUT INTO DOWNSPOUT ADAPTER AND DAYLIGHT TO CURB OR INTO STORM SEWER.

27 LINE OF FOUNDATION – SEE STRUCTURAL DRAWINGS.

28 GRADE SHOWN HERE AS LEVEL BUT WILL ACTUALLY VARY BELOW THIS LINE AS SITE CONDITIONS REQUIRE. SEE SITE PLAN FOR ACTUAL GRADES.

29 6" GALV. PILASTER REVEAL, FRYE # DCS-625-600, PAINTED

30 E.I.F.S. SHAPED PILASTER SEE DET. 3/A13

31 NOT USED

GENERAL NOTES

SEE FINISH SCHEDULE ON SHEET A6 FOR FINISH SPEC. & COLORS.

ROOF EQUIPMENT WILL BE SCREENED FROM VIEW ON THE SURROUNDING STREETS & FREEWAYS.

GENERAL CONTRACTOR TO PROVIDE FOR PROPER GAUGE GUTTER, ATTACHMENTS, AND RAIN WATER LEADERS FROM GUTTER, RUN TO COMPLY WITH APPLICABLE CODES AND ORDINANCES

Project No. 16173

NRD national restaurant designers
ARCHITECTS & ENGINEERS
2805 Meridian Parkway Durham, NC 27713
ph: 919 544 7251 fax: 919 544 9399
A Division of LMHT Associates

Revisions

THESE DRAWINGS ARE THE PROPERTY OF IHOP CORPORATION 525 NORTH BRAND BLVD. 3rd FLOOR GLENDALE, CA 91203-1903 AND SHALL NOT BE USED OR REPRODUCED WITHOUT THE EXPRESS WRITTEN PERMISSION FROM THE OWNER.

IHOP ICON 3.1 PROTOTYPE
LEFT HAND ENTRY

Project location:
17 EDGELL RD.
FRAMINGHAM, MA 01701

Date 6/15/16

SHEET DATA:
EXTERIOR ELEVATIONS

Drawn By | Checked By

Sheet No.
A12

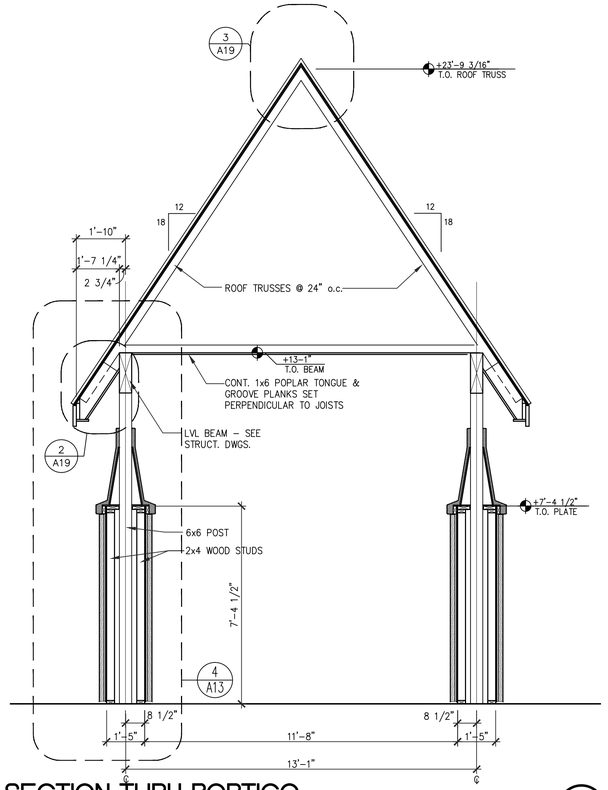

SECTION THRU PORTICO

SCALE: 3/8" = 1'-0"

3

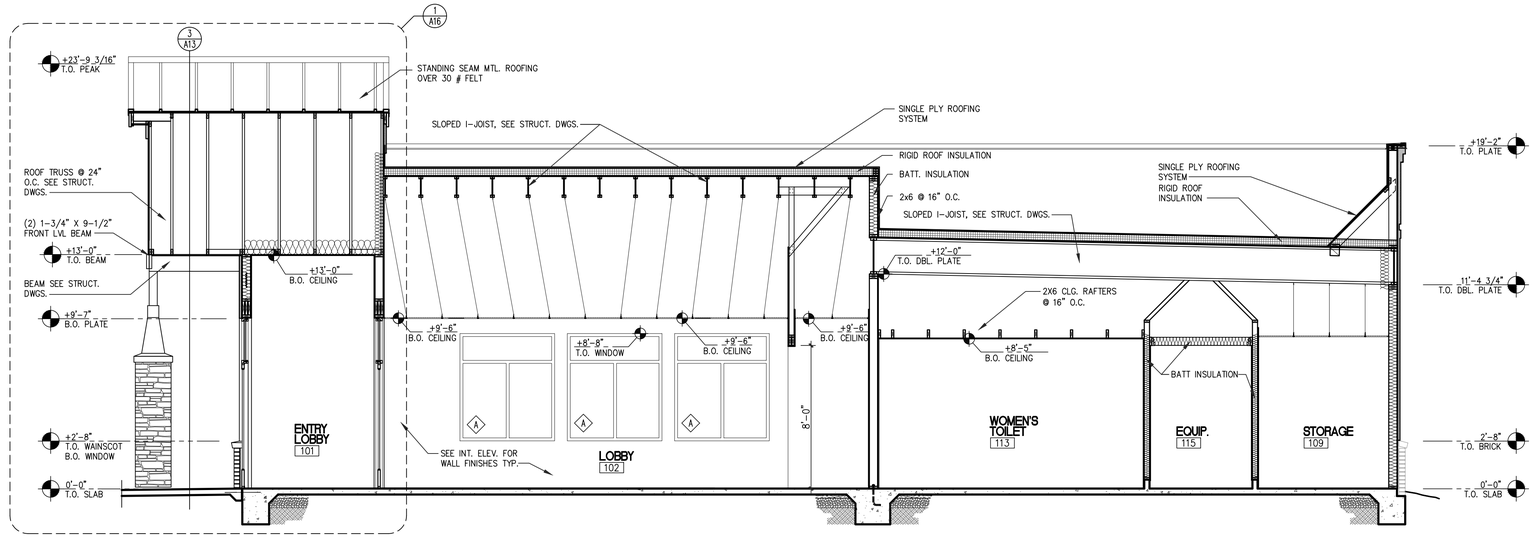

BUILDING TRANSVERSE SECTION THROUGH PORTICO, ENTRY and RESTROOM

SCALE: 1/4" = 1'-0"

1

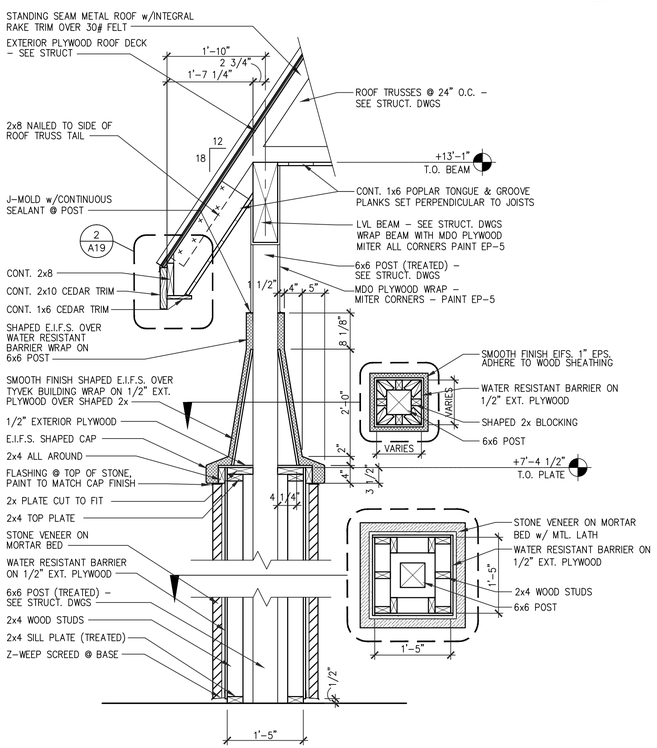

PORTICO COLUMN DETAIL

SCALE: 3/4" = 1'-0"

4

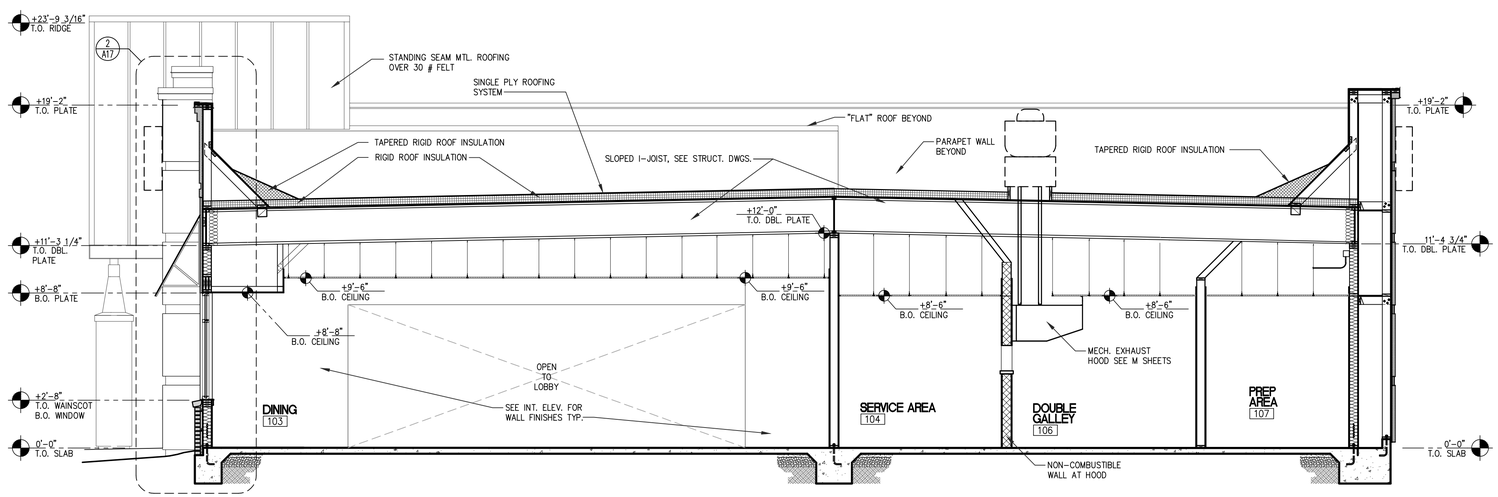

BUILDING TRANSVERSE SECTION THROUGH DINING ROOM, SERVICE AREA and GALLEY

SCALE: 1/4" = 1'-0"

2

Project No. 16173

NRD national restaurant designers
ARCHITECTS & ENGINEERS
2805 Meridian Parkway Durham, NC 27713
ph: 919 544 7251 fax: 919 544 9399
A Division of LMHT Associates

Revisions

THESE DRAWINGS ARE THE PROPERTY OF IHOP CORPORATION 525 NORTH BRAND BLVD. 3rd FLOOR GLENDALE, CA 91203-1903 AND SHALL NOT BE USED OR REPRODUCED WITHOUT THE EXPRESS WRITTEN PERMISSION FROM THE OWNER.

IHOP ICON 3.1 PROTOTYPE
LEFT HAND ENTRY

Project location:
17 EDGELL RD.
FRAMINGHAM, MA 01701

Date
6/15/16

SHEET DATA:
BUILDING SECTIONS

Drawn By | Checked By

Sheet No.
A13

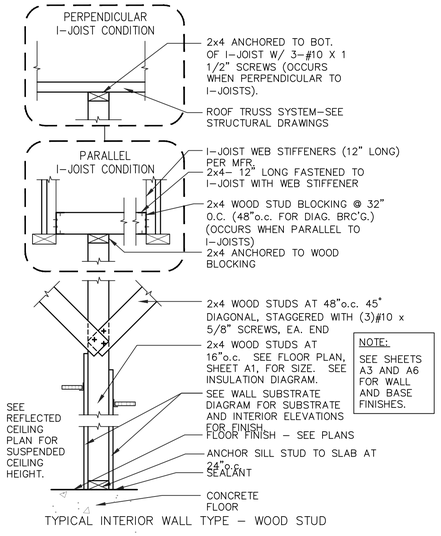

TYPICAL INTERIOR WALL TYPE - WOOD STUD

TYPICAL INTERIOR WALL (2)

SCALE: 1" = 1'-0"

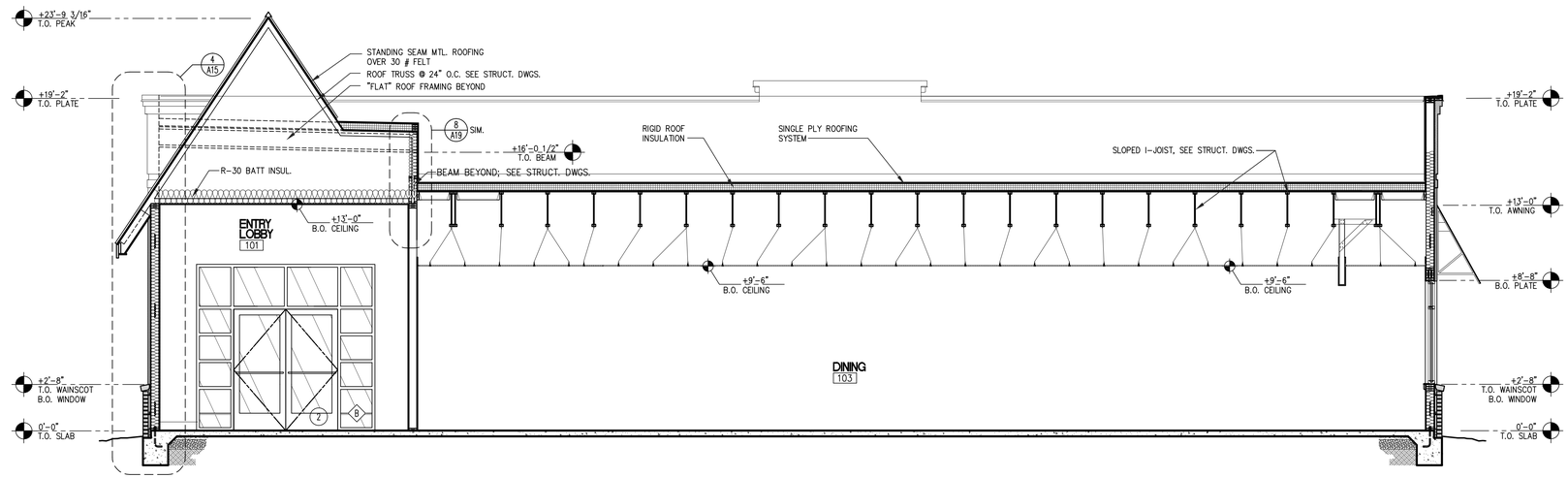

BUILDING CROSS SECTION THROUGH ENTRY and DINING (1)

SCALE: 1/4" = 1'-0"

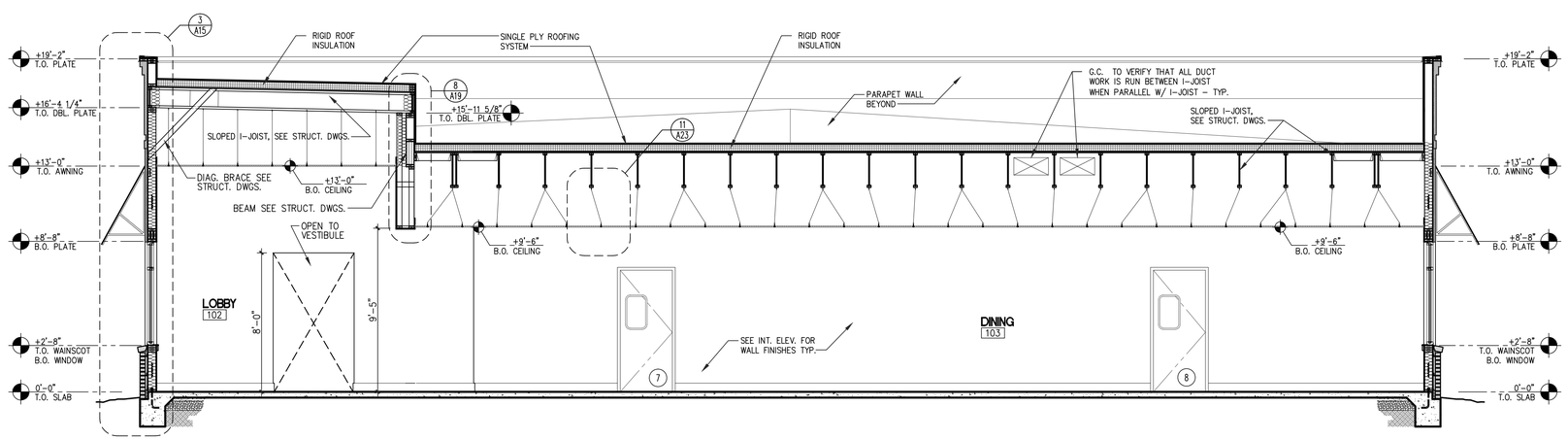

BUILDING CROSS SECTION THROUGH LOBBY and DINING (2)

SCALE: 1/4" = 1'-0"

Project No. 16173

NRD national restaurant designers
ARCHITECTS & ENGINEERS
2805 Meridian Parkway Durham, NC 27713
ph: 919 544 7251 fax: 919 544 9399
A Division of LMHT Associates

Revisions

THESE DRAWINGS ARE THE PROPERTY OF IHOP CORPORATION 525 NORTH BRAND BLVD. 3rd FLOOR GLENDALE, CA 91203-1903 AND SHALL NOT BE USED OR REPRODUCED WITHOUT THE EXPRESS WRITTEN PERMISSION FROM THE OWNER.

IHOP ICON 3.1 PROTOTYPE
LEFT HAND ENTRY

Project location:
17 EDGELL RD.
FRAMINGHAM, MA 01701

Date 6/15/16

SHEET DATA:
BUILDING SECTIONS

Drawn By | Checked By

Sheet No.
A14