Site Plans

Issued for: **Local Approvals**

Date Issued: February 28, 2014

Latest Issue: May 1, 2014

Sheet Index

Number	Drawing Title	Latest Issue
C-1	Legend and General Notes	2/28/2014
C-2	Abutters Plan	2/28/2014
C-3	Layout and Materials Plan	5/1/2014
C-4	Grading and Drainage Plan	5/1/2014
C-5	Utility Plan	5/1/2014
C-6.1 - C6.4	Site Details	5/1/2014
L-1 - L-2	Planting Plan	6/4/2014
L-3	Site Details	5/1/2014

Reference Drawings

Number	Drawing Title	Latest Issue
SV-1	Existing Condition Plan of Land	2/28/2014
	Subdivision Plan of Land in Framingham Massachusetts	6/18/2014
A1	Building Elevations	2/28/2014
A2	Bistro Elevations	2/28/2014
A3	Signage Details	2/28/2014
E0.2	Photometric Site Plan	4/28/2014

Life Time Athletic

490 Old Connecticut Path
Framingham, Massachusetts

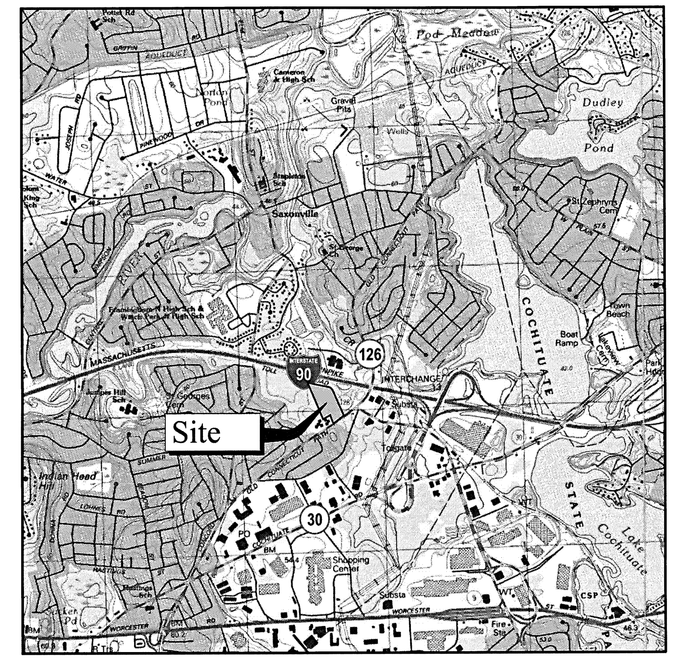

Site Location Map

Property Owners

Owner:
CR 21 LLC
c/o National Development
2310 Washington Street
Newton Lower Falls, MA 02462
Parcel ID:100/348.0-0112-0001.B

Owner:
Four 32 Old Connecticut Path
c/o Parsons Commercial Group
1881 Worcester Road, Suite 200
Framingham, MA 01701
Parcel ID:100/348.0-0112-0001.0

Applicant:
CR 21 LLC
c/o National Development
2310 Washington Street
Newton Lower Falls, MA 02462
Parcel ID:100/348.0-0112-0001.B

FRAMINGHAM PLANNING BOARD
DEFINITIVE DEVELOPMENT PLAN APPROVALS

THIS ENDORSEMENT OF THE PLANNING BOARD SHOULD NOT BE CONSTRUED TO BE DETERMINATION OF CONFORMANCE WITH ZONING REGULATIONS.

Project Architect:
Life Time Architecture
2902 Corporate Place
Chanhassen, MN 55317
952-947-0000

Project Surveyor:
Vanasse Hangen Brustlin, Inc.
101 Walnut Street
Watertown, MA 02471
617-624-1770

Project Landscape Architect:
Vanasse Hangen Brustlin, Inc.
101 Walnut Street
Watertown, MA 02471
617-624-1770

Project Geotechnical Engineer:
Sanborn, Head & Associates, Inc.
1 Technology Park Drive
Westford, MA 01886

Project Lighting Designer:
Emanualson-Podas Consulting Engineers
10401 Bren Road East
Minnetonka, MN 55343
952-930-0050

Vanasse Hangen Brustlin, Inc.
Transportation
Land Development
Environmental Services

Union Station, Suite 219
2 Washington Square
Worcester, Massachusetts 01604
508.752.1001 • FAX 508.752.1276

COMMONWEALTH OF MASSACHUSETTS
CRAIG C. LIZOTTE
CIVIL
No. 39980
REGISTERED PROFESSIONAL ENGINEER

VHB Project No. 12540.00
490 Old Connecticut Path, Framingham, MA
Issued for: Local Approvals

\\VHB\PROJ\WORCESTER\12540.00\CAD\LD\PLANSET\12540-00-COV 3 December 2006

Saved Wednesday, February 05, 2014 10:55:03 AM BRESNER Plotted ---- Gesner, Brittany

Legend

Exist.	Prop.	
		PROPERTY LINE
		PROJECT LIMIT LINE
		RIGHT-OF-WAY/PROPERTY LINE
		EASEMENT
		BUILDING SETBACK
		PARKING SETBACK
10+00	10+00	BASELINE
		CONSTRUCTION LAYOUT
		ZONING LINE
		TOWN LINE
		LIMIT OF DISTURBANCE
		WETLAND LINE WITH FLAG
		FLOODPLAIN
BLSF		BORDERING LAND SUBJECT TO FLOODING
BZ		WETLAND BUFFER ZONE
NDZ		NO DISTURB ZONE
200'RA		200' RIVERFRONT AREA
		GRAVEL ROAD
EOP		EDGE OF PAVEMENT
BB	BB	BITUMINOUS BERM
BC	BC	BITUMINOUS CURB
CC	CC	CONCRETE CURB
	CG	CURB AND GUTTER
CC	ECC	EXTRUDED CONCRETE CURB
CC	MCC	MONOLITHIC CONCRETE CURB
CC	PCC	PRECAST CONC. CURB
SGE	SGE	SLOPED GRAN. EDGING
VGC	VGC	VERT. GRAN. CURB
		LIMIT OF CURB TYPE
		SAWCUT
		BUILDING
	EN	BUILDING ENTRANCE
	LD	LOADING DOCK
		BOLLARD
D	D	DUMPSTER PAD
		SIGN
		DOUBLE SIGN
		STEEL GUARDRAIL
		WOOD GUARDRAIL
		PATH
		TREE LINE
		WIRE FENCE
		FENCE
		STOCKADE FENCE
		STONE WALL
		RETAINING WALL
		STREAM / POND / WATER COURSE
		DETENTION BASIN
		HAY BALES
		SILT FENCE
		SILT SOCK / STRAW WATTLE
4	4	MINOR CONTOUR
20	20	MAJOR CONTOUR
10	10	PARKING COUNT
	C10	COMPACT PARKING STALLS
DYL	DYL	DOUBLE YELLOW LINE
SL	SL	STOP LINE
		CROSSWALK
		ACCESSIBLE CURB RAMP
		ACCESSIBLE PARKING
VAN	VAN	VAN-ACCESSIBLE PARKING

Exist.	Prop.	
		CONCRETE
		HEAVY DUTY PAVEMENT
		RIPRAP
		CONSTRUCTION ENTRANCE
27.35 TC×	27.35 TC×	TOP OF CURB ELEVATION
26.85 BC×	26.85 BC×	BOTTOM OF CURB ELEVATION
132.75×	132.75×	SPOT ELEVATION
45.0 TW× 38.5 BW	45.0 TW× 38.5 BW	TOP & BOTTOM OF WALL ELEVATION
		BORING LOCATION
		TEST PIT LOCATION
MW	MW	MONITORING WELL
UD	UD	UNDERDRAIN
12"D	12"D	DRAIN
6"RD	6"RD	ROOF DRAIN
12"S	12"S	SEWER
FM	FM	FORCE MAIN
OHW	OHW	OVERHEAD WIRE
6"W	6"W	WATER
4"FP	4"FP	FIRE PROTECTION
	2"DW	DOMESTIC WATER
3"G	G	GAS
E	E	ELECTRIC
STM	STM	STEAM
T	T	TELEPHONE
FA	FA	FIRE ALARM
CATV	CATV	CABLE TV
		CATCH BASIN
		DOUBLE CATCH BASIN
		GUTTER INLET
		DRAIN MANHOLE
TD		TRENCH DRAIN
		PLUG OR CAP
CO	CO	CLEANOUT
		FLARED END SECTION
		HEADWALL
		SEWER MANHOLE
CS	CS	CURB STOP & BOX
WV	WV	WATER VALVE & BOX
TSV	TSV	TAPPING SLEEVE, VALVE & BOX
		SIAMESE CONNECTION
HYD	HYD	FIRE HYDRANT
WM	WM	WATER METER
PIV	PIV	POST INDICATOR VALVE
		WATER WELL
GG	GG	GAS GATE
GM	GM	GAS METER
	DMH	ELECTRIC MANHOLE
EM	EM	ELECTRIC METER
		LIGHT POLE
	TMH	TELEPHONE MANHOLE
T	T	TRANSFORMER PAD
		UTILITY POLE
		GUY POLE
		GUY WIRE & ANCHOR
HH	HH	HAND HOLE
PB	PB	PULL BOX
Matchline		MATCHLINE

Abbreviations

General

ABAN	ABANDON
ACR	ACCESSIBLE CURB RAMP
ADJ	ADJUST
APPROX	APPROXIMATE
BIT	BITUMINOUS
BS	BOTTOM OF SLOPE
BWLL	BROKEN WHITE LANE LINE
CONC	CONCRETE
DYCL	DOUBLE YELLOW CENTER LINE
EL	ELEVATION
ELEV	ELEVATION
EXIST	EXISTING
FDN	FOUNDATION
FFE	FIRST FLOOR ELEVATION
GRAN	GRANITE
GTD	GRADE TO DRAIN
LA	LANDSCAPE AREA
LOD	LIMIT OF DISTURBANCE
MAX	MAXIMUM
MIN	MINIMUM
NIC	NOT IN CONTRACT
NTS	NOT TO SCALE
PERF	PERFORATED
PROP	PROPOSED
REM	REMOVE
RET	RETAIN
R&D	REMOVE AND DISPOSE
R&R	REMOVE AND RESET
SWEL	SOLID WHITE EDGE LINE
SWLL	SOLID WHITE LANE LINE
TS	TOP OF SLOPE
TYP	TYPICAL

Utility

CB	CATCH BASIN
CMP	CORRUGATED METAL PIPE
CO	CLEANOUT
DCB	DOUBLE CATCH BASIN
DMH	DRAIN MANHOLE
CIP	CAST IRON PIPE
COND	CONDUIT
DIP	DUCTILE IRON PIPE
FES	FLARED END SECTION
FM	FORCE MAIN
F&G	FRAME AND GRATE
F&C	FRAME AND COVER
GI	GUTTER INLET
GT	GREASE TRAP
HDPE	HIGH DENSITY POLYETHYLENE PIPE
HH	HANDHOLE
HW	HEADWALL
HYD	HYDRANT
INV	INVERT ELEVATION
I=	INVERT ELEVATION
LP	LIGHT POLE
MES	METAL END SECTION
PWW	PAVED WATER WAY
PVC	POLYVINYLCHLORIDE PIPE
PIV	POST INDICATOR VALVE
RCP	REINFORCED CONCRETE PIPE
R=	RIM ELEVATION
SMH	SEWER MANHOLE
TSV	TAPPING SLEEVE, VALVE AND BOX
UG	UNDERGROUND
UP	UTILITY POLE

Notes:

General

1. CONTRACTOR SHALL NOTIFY "DIG-SAFE" (1-888-344-7233) AT LEAST 72 HOURS BEFORE EXCAVATING.
2. CONTRACTOR SHALL BE RESPONSIBLE FOR SITE SECURITY AND JOB SAFETY. CONSTRUCTION ACTIVITIES SHALL BE IN ACCORDANCE WITH OSHA STANDARDS AND LOCAL REQUIREMENTS.
3. ACCESSIBLE ROUTES, PARKING SPACES, RAMPS, SIDEWALKS AND WALKWAYS SHALL BE CONSTRUCTED IN CONFORMANCE WITH THE FEDERAL AMERICANS WITH DISABILITIES ACT AND WITH STATE AND LOCAL LAWS AND REGULATIONS (WHICHEVER ARE MORE STRINGENT).
4. AREAS DISTURBED DURING CONSTRUCTION AND NOT RESTORED WITH IMPERVIOUS SURFACES (BUILDINGS, PAVEMENTS, WALKS, ETC.) SHALL RECEIVE 6 INCHES LOAM AND SEED.
5. WITHIN THE LIMITS OF THE BUILDING FOOTPRINT, THE SITE CONTRACTOR SHALL PERFORM EARTHWORK OPERATIONS REQUIRED UP TO SUBGRADE ELEVATIONS.
6. WORK WITHIN THE LOCAL RIGHTS-OF-WAY SHALL CONFORM TO LOCAL MUNICIPAL STANDARDS. WORK WITHIN STATE RIGHTS-OF-WAY SHALL CONFORM TO THE LATEST EDITION OF THE STATE HIGHWAY DEPARTMENTS STANDARD SPECIFICATIONS FOR HIGHWAYS AND BRIDGES.
7. UPON AWARD OF CONTRACT, CONTRACTOR SHALL MAKE NECESSARY CONSTRUCTION NOTIFICATIONS AND APPLY FOR AND OBTAIN NECESSARY PERMITS, PAY FEES, AND POST BONDS ASSOCIATED WITH THE WORK INDICATED ON THE DRAWINGS, IN THE SPECIFICATIONS, AND IN THE CONTRACT DOCUMENTS. DO NOT CLOSE OR OBSTRUCT ROADWAYS, SIDEWALKS, AND FIRE HYDRANTS, WITHOUT APPROPRIATE PERMITS.
8. TRAFFIC SIGNAGE AND PAVEMENT MARKINGS SHALL CONFORM TO THE MANUAL OF UNIFORM TRAFFIC CONTROL DEVICES.
9. AREAS OUTSIDE THE LIMITS OF PROPOSED WORK DISTURBED BY THE CONTRACTOR'S OPERATIONS SHALL BE RESTORED BY THE CONTRACTOR TO THEIR ORIGINAL CONDITION AT THE CONTRACTOR'S EXPENSE. PRIOR TO CONSTRUCTION, CONTRACTOR SHALL PHOTO DOCUMENT CONDITIONS ALONG THE LIMIT OF WORK AS PART OF A PRE-CONSTRUCTION SITE WALK.
10. IN THE EVENT THAT SUSPECTED CONTAMINATED SOIL, GROUNDWATER, AND OTHER MEDIA ARE ENCOUNTERED DURING EXCAVATION AND CONSTRUCTION ACTIVITIES BASED ON VISUAL, OLFACTORY, OR OTHER EVIDENCE, THE CONTRACTOR SHALL STOP WORK IN THE VICINITY OF THE SUSPECT MATERIAL TO AVOID FURTHER SPREADING OF THE MATERIAL, AND SHALL NOTIFY THE OWNER IMMEDIATELY SO THAT THE APPROPRIATE TESTING AND SUBSEQUENT ACTION CAN BE TAKEN.
11. CONTRACTOR SHALL PREVENT DUST, SEDIMENT, AND DEBRIS FROM EXITING THE SITE AND SHALL BE RESPONSIBLE FOR CLEANUP, REPAIRS AND CORRECTIVE ACTION IF SUCH OCCURS.
12. DAMAGE RESULTING FROM CONSTRUCTION LOADS SHALL BE REPAIRED BY THE CONTRACTOR AT NO ADDITIONAL COST TO OWNER.
13. CONTRACTOR SHALL CONTROL STORMWATER RUNOFF DURING CONSTRUCTION TO PREVENT ADVERSE IMPACTS TO OFF SITE AREAS, AND SHALL BE RESPONSIBLE TO REPAIR RESULTING DAMAGES, IF ANY, AT NO COST TO OWNER. REFER TO ADDITIONAL EROSION CONTROL NOTES ALSO LOCATED ON THIS SHEET.
14. THIS PROJECT DISTURBS MORE THAN ONE ACRE OF LAND AND FALLS WITHIN THE NPDES CONSTRUCTION GENERAL PERMIT (CGP) PROGRAM AND EPA JURISDICTION. PRIOR TO THE START OF CONSTRUCTION CONTRACTOR IS TO FILE A CGP NOTICE OF INTENT WITH THE EPA AND PREPARE A STORMWATER POLLUTION PREVENTION PLAN IN ACCORDANCE WITH THE NPDES REGULATIONS. CONTRACTOR SHALL CONFIRM THE OWNER HAS ALSO FILED A NOTICE OF INTENT WITH THE EPA.
15. ANY PROPOSED SURFACE OPENINGS AND EXCAVATION WORK WITHIN THE TOWN RIGHT-OF-WAY LIMITS (PUBLIC WAYS) WILL REQUIRE A STREET OPENING PERMIT (SOP) WITH THE WORK CONDUCTED UNDER SAID PERMIT BEING PERFORMED IN COMPLIANCE WITH THE TOWN OF FRAMINGHAM SOP POLICY. PER THIS POLICY, APPROPRIATE AND ADEQUATE INSURANCE AND SURETY SHALL BE PROVIDED TO COVER THE PROPOSED WORK. SURETY VALUE TO BE DETERMINED BASED ON THE PROPOSED WORK.
16. A TRENCH OPENING PERMIT (TOP) SHALL BE OBTAINED PRIOR TO THE EXCAVATION OF ANY TRENCH. A TRENCH IS DEFINED UNDER MGL 82A AND 520 CMR 14.00 AS ANY EXCAVATION GREATER THAN 3' IN DEPTH AND LESS THAN 15' BETWEEN SOIL WALLS AS MEASURED FROM THE BOTTOM. UTILITY TRENCHES ARE TO BE SLOPED OR BRACED, AND SHEETED, AS NECESSARY, FOR THE SAFETY OF THE WORKMEN AND THE PROTECTION OF OTHER UTILITIES IN COMPLIANCE WITH APPLICABLE STATE AND FEDERAL REQUIREMENTS.
17. IN USING THESE PLANS FOR BIDDING OR CONSTRUCTION PURPOSES, ALL CONTRACTORS ARE REQUIRED TO REVIEW AND TREAT THEM AS A WHOLE IN ORDER TO IDENTIFY ALL REQUIREMENTS THAT DIRECTLY AFFECT THEIR PORTION OF THE WORK, EVEN REQUIREMENTS LOCATED IN SECTIONS DESIGNATED AS APPLICABLE TO OTHER TRADES. IN CASE OF CONFLICTS, THE AFFECTED CONTRACTOR IS REQUIRED TO EITHER OBTAIN DIRECTION FROM AN APPROPRIATE REPRESENTATIVE OF LIFE TIME ATHLETIC, OR OTHERWISE APPLY THE MORE STRINGENT STANDARD.
18. IF DURING THE CONSTRUCTION PROCESS CONDITIONS ARE ENCOUNTERED WHICH INDICATE AN UNIDENTIFIED SITUATION IS PRESENT, THE CONTRACTOR SHALL CONTACT THE ENGINEER IMMEDIATELY.

Utilities

1. THE LOCATIONS, SIZES, AND TYPES OF EXISTING UTILITIES ARE SHOWN AS AN APPROXIMATE REPRESENTATION ONLY. THE OWNER OR ITS REPRESENTATIVE(S) HAVE NOT INDEPENDENTLY VERIFIED THIS INFORMATION AS SHOWN ON THE PLANS. THE UTILITY INFORMATION SHOWN DOES NOT GUARANTEE THE ACTUAL EXISTENCE, SERVICEABILITY, OR OTHER DATA CONCERNING THE UTILITIES, NOR DOES IT GUARANTEE AGAINST THE POSSIBILITY THAT ADDITIONAL UTILITIES MAY BE PRESENT THAT ARE NOT SHOWN ON THE PLANS. PRIOR TO ORDERING MATERIALS AND BEGINNING CONSTRUCTION, THE CONTRACTOR SHALL VERIFY AND DETERMINE THE EXACT LOCATIONS, SIZES, AND ELEVATIONS OF THE POINTS OF CONNECTIONS TO EXISTING UTILITIES AND, SHALL CONFIRM THAT THERE ARE NO INTERFERENCES WITH EXISTING UTILITIES AND THE PROPOSED UTILITY ROUTES, INCLUDING ROUTES WITHIN THE PUBLIC RIGHTS OF WAY.
2. WHERE AN EXISTING UTILITY IS FOUND TO CONFLICT WITH THE PROPOSED WORK, OR EXISTING CONDITIONS DIFFER FROM THOSE SHOWN SUCH THAT THE WORK CANNOT BE COMPLETED AS INTENDED, THE LOCATION, ELEVATION, AND SIZE OF THE UTILITY SHALL BE ACCURATELY DETERMINED WITHOUT DELAY BY THE CONTRACTOR, AND THE INFORMATION FURNISHED IN WRITING TO THE OWNER'S REPRESENTATIVE FOR THE RESOLUTION OF THE CONFLICT AND CONTRACTOR'S FAILURE TO NOTIFY PRIOR TO PERFORMING ADDITIONAL WORK RELEASES OWNER FROM OBLIGATIONS FOR ADDITIONAL PAYMENTS WHICH OTHERWISE MAY BE WARRANTED TO RESOLVE THE CONFLICT.
3. ALL WORK WITHIN PUBLIC WAYS AND ASSOCIATED WITH WATER DISTRIBUTION AND SEWAGE COLLECTION MUST BE INSPECTED BY A FRAMINGHAM DEPARTMENT OF PUBLIC WORKS UTILITY INSPECTOR. TO SCHEDULE A PRE-CONSTRUCTION MEETING, CONTACT THE TOWN OF FRAMINGHAM ENGINEERING DIVISION AT (508) 532-6022 OR (508) 532-6010 48 HOURS PRIOR TO THE START OF WORK. ALL SITE DRAINAGE, WATER, AND SANITARY SEWER WORK OUTSIDE OF A BUILDING FOOTPRINT SHALL BE PERFORMED BY A LICENSE FRAMINGHAM DRAINLAYER.
4. SET CATCH BASIN RIMS, AND INVERTS OF SEWERS, DRAINS, AND DITCHES IN ACCORDANCE WITH ELEVATIONS ON THE GRADING AND UTILITY PLANS.
5. RIM ELEVATIONS FOR DRAIN AND SEWER MANHOLES, WATER VALVE COVERS, GAS GATES, ELECTRIC AND TELEPHONE PULL BOXES, AND MANHOLES, AND OTHER SUCH ITEMS, ARE APPROXIMATE AND SHALL BE SET/RESET AS FOLLOWS:
   - A. PAVEMENTS AND CONCRETE SURFACES: FLUSH
   - B. ALL SURFACES ALONG ACCESSIBLE ROUTES: FLUSH
   - C. LANDSCAPE, LOAM AND SEED, AND OTHER EARTH SURFACE AREAS: ONE INCH ABOVE SURROUNDING AREA AND TAPER EARTH TO THE RIM ELEVATION.
5. THE LOCATION, SIZE, DEPTH, AND SPECIFICATIONS FOR CONSTRUCTION OF PROPOSED PRIVATE UTILITY SERVICES SHALL BE INSTALLED ACCORDING TO THE REQUIREMENTS PROVIDED BY, AND APPROVED BY, THE RESPECTIVE UTILITY COMPANY (GAS, TELEPHONE, ELECTRIC, FIRE ALARM, ETC.). FINAL DESIGN LOADS AND LOCATIONS TO BE COORDINATED WITH OWNER AND ARCHITECT.
6. CONTRACTOR SHALL MAKE ARRANGEMENTS FOR AND SHALL BE RESPONSIBLE FOR PAYING FEES FOR POLE RELOCATION AND FOR THE ALTERATION AND ADJUSTMENT OF GAS, ELECTRIC, TELEPHONE, FIRE ALARM, AND ANY OTHER PRIVATE UTILITIES, WHETHER WORK IS PERFORMED BY CONTRACTOR OR BY THE UTILITIES COMPANY.
7. UTILITY PIPE MATERIALS SHALL BE AS FOLLOWS, UNLESS OTHERWISE NOTED ON THE PLAN:
   - A. WATER PIPES SHALL BE DUCTILE IRON CLASS 52 OR GREATER. WATER SERVICE PIPES SHALL BE TYPE K COPPER AND FITTINGS SHALL BE LEAD FREE.
   - B. SANITARY SEWER PIPES SHALL BE POLYVINYL CHLORIDE (PVC) SEWER PIPE SDR-35 SEWER PIPE OR GREATER.
   - C. ON SITE STORM DRAINAGE PIPES SHALL BE HIGH DENSITY POLYETHYLENE (HDPE). DRAINAGE PIPES WITH TOWN OF FRAMINGHAM RIGHT-OF-WAY SHALL BE REINFORCED CONCRETE PIPE (RCP).
   - D. PIPE INSTALLATION AND MATERIALS SHALL COMPLY WITH THE STATE PLUMBING CODE WHERE APPLICABLE. CONTRACTOR SHALL COORDINATE WITH LOCAL PLUMBING INSPECTOR PRIOR TO BEGINNING WORK.
   - E. REFER TO TOWN OF FRAMINGHAM DEPARTMENT OF PUBLIC WORKS CONSTRUCTION STANDARDS FOR DETAIL REGARDING UTILITY MATERIALS AND INSTALLATION REQUIREMENTS.
8. WATER MAINS AND APPURTENANCES SHALL BE PRESSURE TESTED, DISINFECTED, AND FLUSHED IN ACCORDANCE WITH TOWN OF FRAMINGHAM DEPARTMENT OF PUBLIC WORKS CONSTRUCTION STANDARDS. SEWER MAINS AND MANHOLES SHALL BE PRESSURE/VACUUM TESTED, MANDREL TESTED, AND VIDEO INSPECTED IN ACCORDANCE WITH TOWN OF FRAMINGHAM DEPARTMENT OF PUBLIC WORKS CONSTRUCTION STANDARDS. DPW PERSONNEL SHALL WITNESS THIS WATER AND SEWER UTILITY TESTED AND SHALL BE PROVIDED WITH TEST DOCUMENTATION.
9. CONTRACTOR SHALL COORDINATE WITH ELECTRICAL CONTRACTOR AND SHALL FURNISH EXCAVATION, INSTALLATION, AND BACKFILL OF ELECTRICAL FURNISHED SITEWORK RELATED ITEMS SUCH AS PULL BOXES, CONDUITS, DUCT BANKS, LIGHT POLE BASES, AND CONCRETE PADS. SITE CONTRACTOR SHALL FURNISH CONCRETE ENCASEMENT OF DUCT BANKS IF REQUIRED BY THE UTILITY COMPANY AND AS INDICATED ON THE DRAWINGS.
10. CONTRACTOR SHALL EXCAVATE AND BACKFILL TRENCHES FOR GAS IN ACCORDANCE WITH GAS COMPANY'S REQUIREMENTS.
11. ALL DRAINAGE AND SANITARY STRUCTURE INTERIOR DIAMETERS (4' MIN.) SHALL BE DETERMINED BY THE MANUFACTURER BASED ON THE PIPE CONFIGURATIONS SHOWN ON THESE PLANS AND LOCAL MUNICIPAL STANDARDS. FOR MANHOLES THAT ARE 20 FEET IN DEPTH AND GREATER, THE MINIMUM DIAMETER SHALL BE 5 FEET.

Layout and Materials

1. DIMENSIONS ARE FROM THE FACE OF CURB, FACE OF BUILDING, FACE OF WALL, AND CENTER LINE OF PAVEMENT MARKINGS, UNLESS OTHERWISE NOTED.
2. CURB RADII ARE 3 FEET UNLESS OTHERWISE NOTED.
3. CURBING SHALL BE PRECAST CONCRETE CURB (PCC) WITHIN THE SITE UNLESS OTHERWISE INDICATED ON THE PLANS. CURBING IN TOWN OF FRAMINGHAM RIGHT-OF-WAY SHALL BE 7" REVEAL VERTICAL GRANITE CURB UNLESS OTHERWISE INDICATED ON THE PLANS.
4. SEE ARCHITECTURAL DRAWINGS FOR EXACT BUILDING DIMENSIONS AND DETAILS CONTIGUOUS TO THE BUILDING, INCLUDING SIDEWALKS, RAMPS, BUILDING ENTRANCES, STAIRWAYS, UTILITY PENETRATIONS, CONCRETE DOOR PADS, COMPACTOR PAD, LOADING DOCKS, BOLLARDS, ETC.
5. PROPOSED BOUNDS AND ANY EXISTING PROPERTY LINE MONUMENTATION DISTURBED DURING CONSTRUCTION SHALL BE SET OR RESET BY A PROFESSIONAL LICENSED SURVEYOR.
6. PRIOR TO START OF CONSTRUCTION, CONTRACTOR SHALL VERIFY EXISTING PAVEMENT ELEVATIONS AT INTERFACE WITH PROPOSED PAVEMENTS, AND EXISTING GROUND ELEVATIONS ADJACENT TO DRAINAGE OUTLETS TO ASSURE PROPER TRANSITIONS BETWEEN EXISTING AND PROPOSED FACILITIES.
7. SYMBOLS AND LEGENDS OF PROJECT FEATURES ARE GRAPHIC REPRESENTATIONS AND ARE NOT NECESSARILY SCALED TO THEIR ACTUAL DIMENSIONS OR LOCATIONS ON THE DRAWINGS. THE CONTRACTOR SHALL REFER TO THE DETAIL SHEET DIMENSIONS, MANUFACTURERS' LITERATURE, SHOP DRAWINGS AND FIELD MEASUREMENTS OF SUPPLIED PRODUCTS FOR LAYOUT OF THE PROJECT FEATURES.
8. CONTRACTOR SHALL NOT RELY SOLELY ON ELECTRONIC VERSIONS OF PLANS, SPECIFICATIONS, AND DATA FILES THAT ARE OBTAINED FROM THE DESIGNERS, BUT SHALL VERIFY LOCATION OF PROJECT FEATURES IN ACCORDANCE WITH THE PAPER COPIES OF THE PLANS AND SPECIFICATIONS THAT ARE SUPPLIED AS PART OF THE CONTRACT DOCUMENTS.
9. MATERIALS SPECIFIED HEREIN FOR THE PROJECT MAY BE SUBSTITUTED FOR AN ALTERNATE OF EQUAL FUNCTION WITH THE APPROVAL OF OWNER AND ENGINEER.

Demolition

1. CONTRACTOR SHALL REMOVE AND DISPOSE OF EXISTING MANMADE SURFACE FEATURES WITHIN THE LIMIT OF WORK INCLUDING BUILDINGS, STRUCTURES, PAVEMENTS, SLABS, CURBING, FENCES, UTILITY POLES, SIGNS, ETC. UNLESS INDICATED OTHERWISE ON THE DRAWINGS. REMOVE AND DISPOSE OF EXISTING UTILITIES, FOUNDATIONS AND UNSUITABLE MATERIAL TO THE SITE PROPERTY LINES.
2. EXISTING UTILITIES SHALL BE TERMINATED, UNLESS OTHERWISE NOTED, IN CONFORMANCE WITH LOCAL, STATE AND INDIVIDUAL UTILITY COMPANY STANDARD SPECIFICATIONS AND DETAILS. THE CONTRACTOR SHALL COORDINATE UTILITY SERVICE DISCONNECTS WITH THE UTILITY REPRESENTATIVES. UTILITY STUB LOCATIONS SHALL BE MARKED AT THE PROPERTY LINE.
3. CONTRACTOR SHALL DISPOSE OF DEMOLITION DEBRIS IN ACCORDANCE WITH APPLICABLE FEDERAL, STATE AND LOCAL REGULATIONS, ORDINANCES AND STATUTES.
4. THE DEMOLITION LIMITS DEPICTED IN THE PLANS IS INTENDED TO AID THE CONTRACTOR DURING THE BIDDING AND CONSTRUCTION PROCESS AND IS NOT INTENDED TO DEPICT EACH AND EVERY ELEMENT OF DEMOLITION. THE CONTRACTOR IS RESPONSIBLE FOR IDENTIFYING THE DETAILED SCOPE OF DEMOLITION BEFORE SUBMITTING ITS BID/PROPOSAL TO PERFORM THE WORK AND SHALL MAKE NO CLAIMS AND SEEK NO ADDITIONAL COMPENSATION FOR CHANGED CONDITIONS OR UNFORESEEN OR LATENT SITE CONDITIONS RELATED TO ANY CONDITIONS DISCOVERED DURING EXECUTION OF THE WORK.
5. UNLESS OTHERWISE SPECIFICALLY PROVIDED ON THE PLANS OR IN THE SPECIFICATIONS, THE ENGINEER HAS NOT PREPARED DESIGNS FOR AND SHALL HAVE NO RESPONSIBILITY FOR THE PRESENCE, DISCOVERY, REMOVAL, ABATEMENT OR DISPOSAL OF HAZARDOUS MATERIALS, TOXIC WASTES OR POLLUTANTS AT THE PROJECT SITE. THE ENGINEER SHALL NOT BE RESPONSIBLE FOR ANY CLAIMS OF LOSS, DAMAGE, EXPENSE, DELAY, INJURY OR DEATH ARISING FROM THE PRESENCE OF HAZARDOUS MATERIAL AND CONTRACTOR SHALL INDEMNIFY AND HOLD HARMLESS THE ENGINEER FROM ANY CLAIMS MADE IN CONNECTION THEREWITH. MOREOVER, THE ENGINEER SHALL HAVE NO ADMINISTRATIVE OBLIGATIONS OF ANY TYPE WITH REGARD TO ANY CONTRACTOR AMENDMENT INVOLVING THE ISSUES OF PRESENCE, DISCOVERY, REMOVAL, ABATEMENT OR DISPOSAL OF ASBESTOS OR OTHER HAZARDOUS MATERIALS.

Erosion Control

1. AS OUTLINED IN GENERAL NOTES 13 & 14, PRIOR TO STARTING ANY OTHER WORK ON THE SITE, THE CONTRACTOR SHALL NOTIFY APPROPRIATE AGENCIES AND SHALL INSTALL EROSION CONTROL MEASURES AS SHOWN ON THE PLANS AND AS IDENTIFIED IN FEDERAL, STATE, AND LOCAL APPROVAL DOCUMENTS PERTAINING TO THIS PROJECT.
2. CONTRACTOR SHALL INSPECT AND MAINTAIN EROSION CONTROL MEASURES, AND REMOVE SEDIMENT THEREFROM ON A WEEKLY BASIS AND WITHIN TWELVE HOURS AFTER EACH STORM EVENT AND DISPOSE OF SEDIMENTS IN AN UPLAND AREA SUCH THAT THEY DO NOT ENCUMBER OTHER DRAINAGE STRUCTURES AND PROTECTED AREAS.
3. CONTRACTOR SHALL BE FULLY RESPONSIBLE TO CONTROL CONSTRUCTION SUCH THAT SEDIMENTATION SHALL NOT AFFECT REGULATORY PROTECTED AREAS, WHETHER SUCH SEDIMENTATION IS CAUSED BY WATER, WIND, OR DIRECT DEPOSIT.
4. CONTRACTOR SHALL MAINTAIN EROSION CONTROL MEASURES IN ACCORDANCE WITH THE STORMWATER POLLUTION PREVENTION PLAN AND ALL APPLICABLE PERMITS AND REGULATIONS.
5. CONTRACTOR SHALL PERFORM CONSTRUCTION SEQUENCING SUCH THAT EARTH MATERIALS ARE EXPOSED FOR A MINIMUM OF TIME BEFORE THEY ARE COVERED, SEEDED, OR OTHERWISE STABILIZED TO PREVENT EROSION.
6. UPON COMPLETION OF CONSTRUCTION AND ESTABLISHMENT OF PERMANENT GROUND COVER, CONTRACTOR SHALL REMOVE AND DISPOSE OF EROSION CONTROL MEASURES AND CLEAN SEDIMENT AND DEBRIS FROM ENTIRE DRAINAGE AND SEWER SYSTEMS.

Existing Conditions Information

1. BASE PLAN: THE PROPERTY LINES SHOWN WERE DETERMINED BY AN ACTUAL FIELD SURVEY CONDUCTED BY VHB, INC. IN JULY, 2009 AND FROM DEEDS AND PLANS OF RECORD. THE TOPOGRAPHY AND PHYSICAL FEATURES ARE BASED ON AN ACTUAL FIELD SURVEY PERFORMED ON THE GROUND BY VHB, INC. IN JULY, 2009 AND UPDATED IN OCTOBER, 2013.
   - A. DELINEATION OF THE WETLANDS AND PLACEMENT OF THE FLAGS WAS PERFORMED BY VHB, INC. IN OCTOBER, 2013.
   - B. FLAGS MARKING THE WETLANDS WERE LOCATED BY GPS METHODS BY VHB, INC. IN OCTOBER, 2013.
   - C. THE FRAMINGHAM CONSERVATION COMMISSION ISSUED AN ORDER OF RESOURCE AREA DELINEATION ON JANUARY 23, 2014 UNDER MASSDEP FILE NUMBER 158-1302 APPROVING THE BOUNDARIES AND ASSOCIATED BUFFER ZONES.
2. TOPOGRAPHY: ELEVATIONS ARE BASED ON NAVD 1988.
3. GEOTECHNICAL DATA INCLUDING TEST PIT AND BORING LOCATIONS AND ELEVATIONS WERE OBTAINED FROM A GEOTECHNICAL ENGINEERING REPORT PREPARED BY SANBORN HEAD.

Document Use & Plan Intent

1. THESE PLANS AND CORRESPONDING CADD DOCUMENTS ARE INSTRUMENTS OF PROFESSIONAL SERVICE, AND SHALL NOT BE USED, IN WHOLE OR IN PART, FOR ANY PURPOSE OTHER THAN FOR WHICH IT WAS CREATED WITHOUT THE EXPRESSED, WRITTEN CONSENT OF VHB. ANY UNAUTHORIZED USE, REUSE, MODIFICATION OR ALTERATION, INCLUDING AUTOMATED CONVERSION OF THIS DOCUMENT SHALL BE AT THE USER'S SOLE RISK WITHOUT LIABILITY OR LEGAL EXPOSURE TO VHB.
2. THESE PLANS DEPICT THE PROJECT AT A LEVEL OF DETAIL SUFFICIENT TO MEET THE REQUIREMENTS OF PERMITTING BUT ARE NOT INTENDED TO INCLUDE DETAILS SUFFICIENT FOR CONSTRUCTION.

FRAMINGHAM PLANNING BOARD
DEFINITIVE DEVELOPMENT PLAN APPROVALS

THIS ENDORSEMENT OF THE PLANNING BOARD SHOULD NOT BE CONSTRUED TO BE DETERMINATION OF CONFORMANCE WITH ZONING REGULATIONS.

LIFETIME
THE HEALTHY WAY OF LIFE COMPANY
2902 CORPORATE PLACE
CHANHASSEN, MN 55317

CONFIDENTIALITY NOTICE
"BY ACCEPTING THIS MATERIAL, THE RECIPIENT ACKNOWLEDGES AND AGREES THAT THE INFORMATION CONTAINED HEREIN IS OF A CONFIDENTIAL NATURE AND THAT THE RECIPIENT WILL NOT COPY, DISCLOSE, DISTRIBUTE OR OTHERWISE TRANSMIT IN ANY WAY ANYTHING HEREIN, EITHER IN WHOLE OR IN PART, WITHOUT THE PRIOR WRITTEN PERMISSION OF LIFE TIME FITNESS, INC. OR ITS SUBSIDIARIES (THE "COMPANY"), COMPLETING THE POTENTIAL TRANSACTION CONTEMPLATED BY EXCEPT FOR THE SPECIFIC PURPOSE OF ANALYZING AND THIS MATERIAL.THIS MATERIAL REMAINS THE SOLE PROPERTY OF THE COMPANY AND THE COMPANY RESERVES THE RIGHT TO REQUIRE ITS RETURN AT ANY TIME."

NATIONAL DEVELOPMENT

Vanasse Hangen Brustlin, Inc.
Transportation
Land Development
Environmental Services
Union Station, Suite 219
2 Washington Square
Worcester, Massachusetts 01604
508.752.1001 • FAX 508.752.1276

REVISIONS

COMMONWEALTH OF MASSACHUSETTS CRAIG C. LIZOTTE CIVIL No. 39047 REGISTERED PROFESSIONAL ENGINEER

PROJECT NAME: LIFE TIME ATHLETIC - FRAMINGHAM	PUBLICATIONS: Issued For Local Approvals	DATE: 02/28/2014	SHEET NO.: C-1
SHEET TITLE: LEGEND AND GENERAL NOTES	PROJECT ADDRESS: 490 Old Connecticut Path Framingham, MA		APPROVED BY: JWD
			DRAWN BY: BMG
			APPLICATION NUMBER:

Saved Wednesday, February 05, 2014 10:55:03 AM BIESNER Plotted ---- Gesner, Brittany

Notes

1. PROPERTY BOUNDARIES IMPORTED FROM MASS GIS DATALAYERS.
2. PROPERTY INFORMATION FROM TOWN OF FRAMINGHAM ASSESSOR'S ONLINE DATABASE.
3. ZONING BOUNDARIES APPROXIMATED USING TOWN OF FRAMINGHAM ZONING MAP REVISED FEBRUARY 1, 2007.

Parcel ID	No.	Street Name	Owner
100/272.0-0141-0057.0	0	ARLENE DR	N/F TOWN OF FRAMINGHAM
100/272.0-0141-0057.0	0	CONCORD ST OFF	N/F DORAN BRENDAN & PHYLLIS A
100/271.0-0138-0012.0	0	EMILY RD	N/F ROMAR CONSTRUCTION CO
100/271.0-0138-0013.0	0	EMILY RD	N/F ROMAR CONSTRUCTION CO
100/266.0-0133-0023.0	31	EMILY RD	N/F SUSAN HARRIET A
100/266.0-0133-0033.0	33	EMILY RD	N/F STARK, LUIZO TR
100/271.0-0138-0010.0	34	EMILY RD	N/F CALLOE, MARY A
100/266.0-0133-0031.0	37	EMILY RD	N/F HANNON, TIMOTHY B
100/271.0-0138-0007.0	18	FEMIA RD	N/F KLING, BARRY S & MARCI D
100/271.0-0138-0008.0	20	FEMIA RD	N/F CANNON, MICHAEL P
100/271.0-0138-0009.0	22	FEMIA RD	N/F BARNUM, STEVEN D & DIANE M
100/272.0-0140-0245.0	0	FISHER AVE	N/F FOUR 32 OLD CONNECTICUT PATH
100/272.0-0139-0096.0	1277	FISHER AVE	N/F TOWN OF FRAMINGHAM TAX TITLE
100/271.0-0138-0011.0	0	GIBBS ST	N/F ROMAR CONSTRUCTION CO
100/272.0-0141-0063.0	14	GIBBS ST	N/F DOWNING, ROBERT F & BERNADETTE
100/349.0-0115-0002.D	168	NEWBURY ST	N/F CHAMBERS STUART H & KATHLEEN
100/349.0-0115-0002.B	172	NEWBURY ST	N/F NG GAN SONG ETAL BI ZHEN CHEN
100/349.0-0115-0002.A	174	NEWBURY ST	N/F NG, SAU TING & CHAN, SAU YAM
100/349.0-0115-0001.E	178	NEWBURY ST	N/F PERL, LAWRENCE E
100/349.0-0115-0001.D	180	NEWBURY ST	N/F WANG, JIAHUI
100/349.0-0115-0001.C	182	NEWBURY ST	N/F REILLY, JOHN F & MARTINEZ, SHAWNDRA D
100/632.0-0001-0005.A	423	OLD CONNECTICUT PATH	N/F STONE, BRUCE H TR
100/632.0-0001-0006.A	429	OLD CONNECTICUT PATH	N/F SCHNEIDER HERMAN & ETTA
100/349.0-0115-0003.A	433	OLD CONNECTICUT PATH	N/F OCPD, LLC
100/349.0-0115-0003.B	437	OLD CONNECTICUT PATH	N/F ALICE LEBEWOHL, LLC
100/348.0-0112-0003.0	438	OLD CONNECTICUT PATH	N/F SAXONY APARTMENTS INC
100/349.0-0115-0003.0	441	OLD CONNECTICUT PATH	N/F ALICE OGDEN LEBEWOHL, LLC
100/349.0-0115-0001.0	445	OLD CONNECTICUT PATH	N/F KUMAR, SACHINDRA
100/349.0-0115-0001.B	447	OLD CONNECTICUT PATH	N/F CASEY PAUL F & ANABEL P
100/348.0-0112-0004.0	458	OLD CONNECTICUT PATH	N/F GUSTIN, SARAH TRUSTEE
100/348.0-0112-0002.B	492	OLD CONNECTICUT PATH	N/F CRP-3 FRAMINGHAM CORP CTR LLC
100/348.0-0112-0002.0	495	OLD CONNECTICUT PATH	N/F HUGHES, SCOTT R TR

80 0 80 160
SCALE IN FEET

FRAMINGHAM PLANNING BOARD
DEFINITIVE DEVELOPMENT PLAN APPROVALS

THIS ENDORSEMENT OF THE PLANNING BOARD SHOULD NOT BE CONSTRUED TO BE DETERMINATION OF CONFORMANCE WITH ZONING REGULATIONS.

LIFETIME
THE HEALTHY WAY OF LIFE COMPANY℠
2902 CORPORATE PLACE
CHANHASSEN, MN 55317

CONFIDENTIALITY NOTICE
"BY ACCEPTING THIS MATERIAL, THE RECIPIENT ACKNOWLEDGES AND AGREES THAT THE INFORMATION CONTAINED HEREIN IS OF A CONFIDENTIAL NATURE AND THAT THE RECIPIENT WILL NOT COPY, DISCLOSE, DISTRIBUTE OR OTHERWISE TRANSMIT IN ANY WAY ANYTHING HEREIN, EITHER IN WHOLE OR IN PART, WITHOUT THE PRIOR WRITTEN PERMISSION OF LIFE TIME FITNESS, INC. OR ITS SUBSIDIARIES (THE "COMPANY"), COMPLETING THE POTENTIAL TRANSACTION CONTEMPLATED BY EXCEPT FOR THE SPECIFIC PURPOSE OF ANALYZING AND THIS MATERIAL.THIS MATERIAL REMAINS THE SOLE PROPERTY OF THE COMPANY AND THE COMPANY RESERVES THE RIGHT TO REQUIRE ITS RETURN AT ANY TIME."

NATIONAL DEVELOPMENT

Vanasse Hangen Brustlin, Inc.
VHB
Transportation
Land Development
Environmental Services
Union Station, Suite 219
2 Washington Square
Worcester, Massachusetts 01604
508.752.1001 • FAX 508.752.1276

REVISIONS

COMMONWEALTH OF MASSACHUSETTS
CRAIG C. LIZOTTE
CIVIL
NO. 38395
PROFESSIONAL ENGINEER

PROJECT NAME: LIFE TIME ATHLETIC - FRAMINGHAM	PUBLICATIONS: Issued For Local Approvals	DATE: 02/28/2014	SHEET NO.: C-2
SHEET TITLE: ABUTTERS PLAN	PROJECT ADDRESS: 490 Old Connecticut Path Framingham, MA		APPROVED BY: JWD
			DRAWN BY: BMG
			APPLICATION NUMBER:

Saved Wednesday, February 05, 2014 10:55:03 AM BGESNER Plotted ---- Gesner, Brittany

Zoning Summary Chart

Zoning District(S):	General Manufacturing (M)		
Overlay District(S):	N/A		
Zoning Regulation Requirements	Existing	Required	Provided
MINIMUM LOT AREA	398,994 SF	6,000 SF	429,041 SF[1]
FRONTAGE		50 Feet	
OLD CONNECTICUT PATH	321.5± Feet	--	321.5± Feet
SEALTEST DRIVE	1,249± Feet	--	1,249± Feet
FRONT YARD SETBACK	13.3 Feet	50 Feet	88.3 Feet
SIDE YARD SETBACK	116.5 Feet	15 Feet	109.4 Feet[2]
REAR YARD SETBACK	82.9 Feet	15 Feet	30.2 Feet[3]
MAXIMUM FLOOR AREA RATIO	0.30	0.32	0.32[4]
MAXIMUM BUILDING HEIGHT	2 Stories	6 Stories/80 Feet*	3 Stories/< 80 Feet
MINIMUM LANDSCAPE OPEN SPACE RATIO	26.3% (104,927 SF)	20% (85,809 SF)	26.8% (114,947 SF)

1. EXISTING LOT AREA AT 490 OLD CONNECTICUT PATH OF 398,994 SF PLUS 30,047 SF ADDITIONAL LOT AREA FROM 432 OLD CONNECTICUT PATH.
2. MEASURED TO OUTDOOR BISTRO (CLOSEST BUILDING TO SIDE & REAR PROPERTY LINES)
3. TOTAL GSF OF BUILDINGS IS EQUAL TO 137,300 (136,500 (MAIN BUILDING) & 800 (BISTRO)). TOTAL LOT AREA INCLUDES EXISTING LOT AREA AND PROPOSED ADDITIONAL PROPERTY FROM 432 OLD CONNECTICUT PATH.
4. THE FOLLOWING HEIGHT REGULATIONS APPLY RELATIVE TO DISTANCES FROM A RESIDENTIAL DISTRICT: FROM 50 FT–200 FT: 40 FT HIGH, FROM 200 FT–300 FT: 50 FT HIGH, FROM 300 FT–400 FT: 60 FT HIGH, AND GREATER THAN 400 FT: 80 FT HIGH. ACCORDING TO THE MASS GIS DATA OF FRAMINGHAM ZONING THE LTF BUILDING IS LOCATED 470± FROM A RESIDENTIAL DISTRICT.

Parking Summary Chart

Description	Size Required	Size Provided	Spaces Required	Spaces Provided***
STANDARD SPACES STANDARD END SPACES	9 x 18 10 x 18	9 x 18 10 x 18	582	582
STANDARD ACCESSIBLE SPACES *	8 x 18	9 x 18	10	10
VAN ACCESSIBLE SPACES	11 x 18	11 x 18	2	2
TOTAL SPACES			594	594
LOADING BAYS**			2	2

* ADA/STATE/LOCAL REQUIREMENTS
** LOADING BAYS: TWO BAYS FOR OVER 50,000 SF (RECREATION & ENTERTAINMENT USE)
*** "PROVIDED" PARKING TOTALS INCLUDE FOUR (4) LAND BANKED SPACES

Parking Requirements:

HEALTHCLUB: 1 SPACE / 3 OCCUPANTS THE FACILITY IS INTENDED TO ACCOMMODATE 1,782 OCCUPANTS (estimated) / 3 = 594 SPACES REQUIRED

Sign Summary

M.U.T.C.D. Number	Specification Width	Specification Height	Desc.
R1-1	30"	30"	STOP
R7-1	12"	18"	NO PARKING ANY TIME
R7-8	12"	18"	RESERVED PARKING
R7-8P	12"	6"	VAN ACCESSIBLE
S-1	24"	18"	MOTORCYCLE PARKING
W2-2R(M)	18"	18"	
W16-9P	24"	12"	AHEAD

Notes

1. PLAN INTENT: THIS PLAN DEPICTS THE PROJECT AT A LEVEL OF DETAIL SUFFICIENT TO MEET THE REQUIREMENTS OF PERMITTING BUT IS NOT INTENDED TO INCLUDE DETAILS SUFFICIENT FOR CONSTRUCTION.
2. LIMITS OF PAVING (RECLAMATION OR MILL & OVERLAY) WITHIN SEALTEST DRIVE TO BE DETERMINED AS PART OF OFF-SITE ROADWAY IMPROVEMENTS.
3. FOLLOWING APPROVAL OF PROJECT BY PLANNING BOARD, OWNER WILL ACQUIRE APPROXIMATELY 30,047 SQUARE FEET OF LAND FROM ADJACENT PARCEL 432 OLD CONNECTICUT PATH AND WILL COMBINE IT WITH THE SITE, BY ANR PLAN, TO ACHIEVE FINAL TOTAL SITE AREA OF 429,041 SQUARE FEET.
4. VHB ENVIRONMENTAL SCIENTISTS DELINEATED WETLANDS ON ADJACENT PARCEL IN OCTOBER, 2013. THE FRAMINGHAM CONSERVATION COMMISSION ISSUED AN ORDER OF RESOURCE AREA DELINEATION ON JANUARY 23, 2014 UNDER MASSDEP FILE NUMBER 158-1302 APPROVING THE BOUNDARIES AND ASSOCIATED BUFFER ZONES.
5. REFER TO SHEET C-1 FOR LEGEND AND GENERAL NOTES. REFER TO SHEETS 5.1 – 5.4 FOR DETAILS.

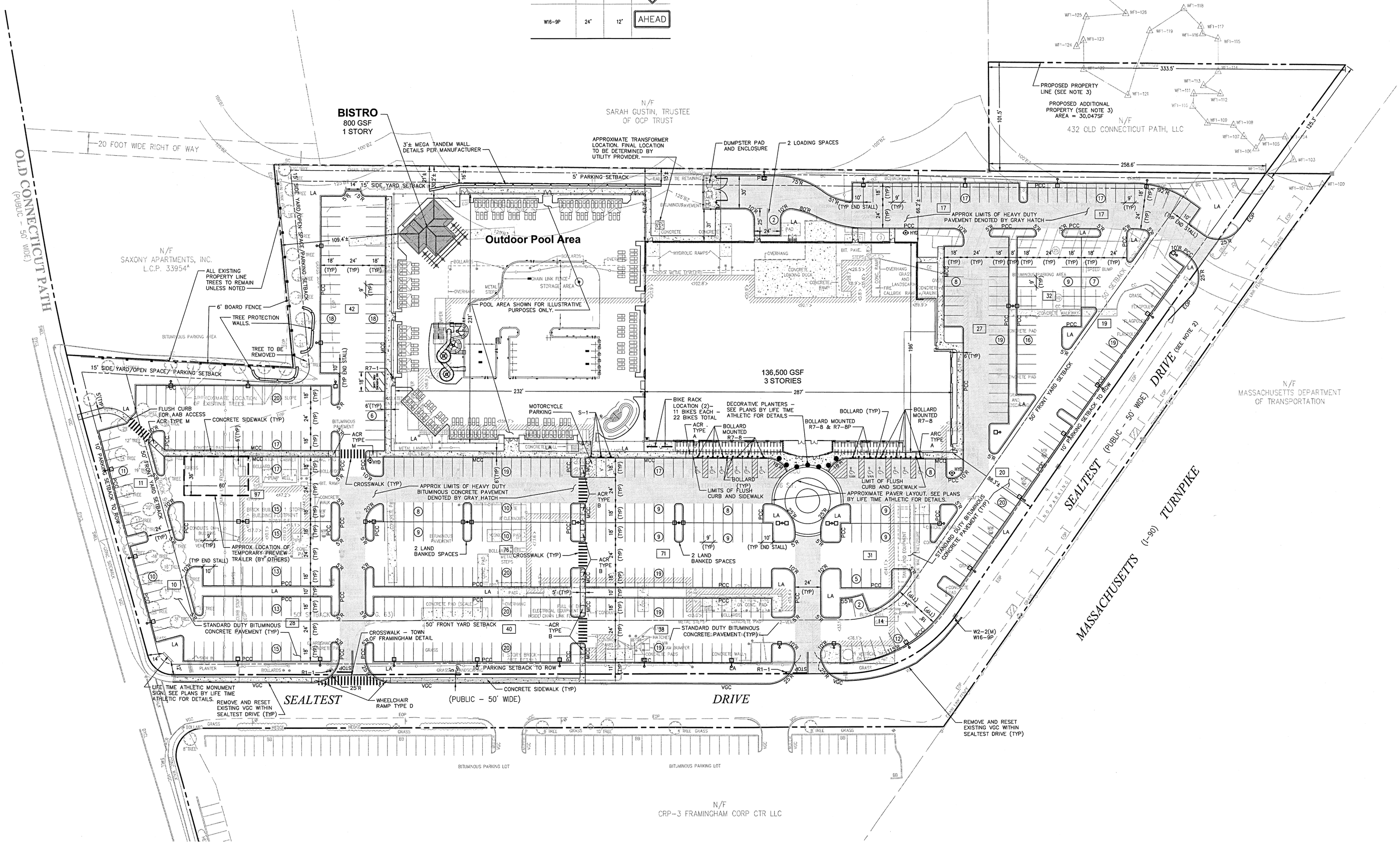

40 0 40 80
SCALE IN FEET

FRAMINGHAM PLANNING BOARD
DEFINITIVE DEVELOPMENT PLAN APPROVALS

THIS ENDORSEMENT OF THE PLANNING BOARD SHOULD NOT BE CONSTRUED TO BE DETERMINATION OF CONFORMANCE WITH ZONING REGULATIONS.

LIFETIME
THE HEALTHY WAY OF LIFE COMPANY
2902 CORPORATE PLACE
CHANHASSEN, MN 55317

CONFIDENTIALITY NOTICE
"BY ACCEPTING THIS MATERIAL, THE RECIPIENT ACKNOWLEDGES AND AGREES THAT THE INFORMATION CONTAINED HEREIN IS OF A CONFIDENTIAL NATURE AND THAT THE RECIPIENT WILL NOT COPY, DISCLOSE, DISTRIBUTE OR OTHERWISE TRANSMIT IN ANY WAY ANYTHING HEREIN, EITHER IN WHOLE OR IN PART, WITHOUT THE PRIOR WRITTEN PERMISSION OF LIFE TIME FITNESS, INC. OR ITS SUBSIDIARIES (THE "COMPANY"), COMPLETING THE POTENTIAL TRANSACTION CONTEMPLATED BY EXCEPT FOR THE SPECIFIC PURPOSE OF ANALYZING AND THIS MATERIAL. THIS MATERIAL REMAINS THE SOLE PROPERTY OF THE COMPANY AND THE COMPANY RESERVES THE RIGHT TO REQUIRE ITS RETURN AT ANY TIME."

NATIONAL DEVELOPMENT

Vanasse Hangen Brustlin, Inc.
Transportation
Land Development
Environmental Services
Union Station, Suite 219
2 Washington Square
Worcester, Massachusetts 01604
508.752.1001 • FAX 508.752.1276

REVISIONS

No.	Revision	Date	Appvd.
1	PERMITTING COORDINATION	5/1/14	CCL

COMMONWEALTH OF MASSACHUSETTS CRAIG C. LIZOTTE CIVIL No. 39351 REGISTERED PROFESSIONAL ENGINEER

PROJECT NAME: LIFE TIME ATHLETIC - FRAMINGHAM	PUBLICATIONS: Issued For Local Approvals	DATE: 02/28/2014	SHEET NO.: C-3
SHEET TITLE: LAYOUT AND MATERIALS PLAN	PROJECT ADDRESS: 490 Old Connecticut Path Framingham, MA		APPROVED BY: JWD DRAWN BY: BMG APPLICATION NUMBER:

Saved Wednesday, February 05, 2014 10:55:03 AM BGENER Plotted ---- Gaines, Brittany

Notes

1. PLAN INTENT: THIS PLAN DEPICTS THE PROJECT AT A LEVEL OF DETAIL SUFFICIENT TO MEET THE REQUIREMENTS OF PERMITTING BUT IS NOT INTENDED TO INCLUDE DETAILS SUFFICIENT FOR CONSTRUCTION.
2. LIMITS OF PAVING (RECLAMATION OR MILL & OVERLAY) WITHIN SEALTEST DRIVE TO BE DETERMINED AS PART OF OFF-SITE ROADWAY IMPROVEMENTS.
3. SEVERAL ASSUMPTIONS WERE MADE IN THE GRADING PLAN DESIGN. THE GRADING CONTRACTOR SHALL BE RESPONSIBLE FOR PERFORMING HIS OWN DIRT TAKE-OFF OF THE PROPOSED GRADING AND SHALL EVALUATE THE GEOTECHNICAL REPORT TO MAKE HIS OWN ASSUMPTIONS PRIOR TO THE START OF GRADING. IF IT IS DETERMINED THAT THE ENGINEER MADE AN INCORRECT ASSUMPTION OR THAT FIELD CONDITIONS ARE DIFFERENT THAN ASSUMED, THE GRADING CONTRACTOR IS RESPONSIBLE FOR IMMEDIATELY INFORMING ENGINEER/OWNER OF ANY DISCREPANCIES IN GRADING QUANTITIES SO THAT THE SITE CAN BE RAISED OR LOWERED AS NECESSARY TO ACHIEVE A SITE BALANCE.
4. THE CONTRACTORS BID FOR SITE GRADING SHALL ASSUME THAT ANY IMPORT OR EXPORT NOT IDENTIFIED IN THE PLANS SHALL BE CONSIDERED INCIDENTAL TO THE BID, AND NO ADDITIONAL COMPENSATION SHALL BE PAID TO THE GRADING CONTRACTOR FOR HAULING OFF OR IMPORT OF FILL UNLESS MUTUALLY AGREED TO BY OWNER.
5. CONTOURS SHOWN ARE FOR FINISHED PAVEMENT, SIDEWALK, SLAB OR GROUND. ADJUSTMENT TO SUBGRADE IS THE CONTRACTOR'S RESPONSIBILITY.
6. THE CONTRACTOR SHOULD VERIFY ALL EARTHWORK QUANTITIES SHOWN OR NOT SHOWN ON THE CONSTRUCTION PLANS.
7. IF DURING THE GRADING PROCESS, CONDITIONS ARE ENCOUNTERED WHICH COULD INDICATE AN UNIDENTIFIED SITUATION IS PRESENT, THE GEOTECHNICAL ENGINEER SHALL BE CONTACTED FOR RECOMMENDATION.
8. ON-SITE MATERIALS SUITABLE FOR FILL BENEATH DRIVES AND PARKING AREAS BEYOND 5-FEET OF THE BUILDING SHALL BE COMPACTED IN ACCORDANCE WITH GUIDELINES PRESENTED IN THE GEOTECHNICAL REPORT.
9. SPOT ELEVATIONS SHOWN TAKE PRECEDENCE OVER CONTOUR AND SLOPES SHOWN. SPOT ELEVATIONS AND SPECIFIC PROFILE DESIGN SHALL BE USED FOR SETTING ELEVATIONS OF CURB, GUTTER, AND UTILITIES.
10. ALL UTILITIES (MANHOLES, VALVE COVERS, CLEANOUTS, VAULTS, BOXES, ETC.) SHALL BE ADJUSTED TO FINAL GRADE PRIOR TO THE FINAL LIFT OF ASPHALT, AND SHALL BE CONSIDERED INCIDENTAL.
11. ALL EARTH MOVING AND PLACEMENT OPERATIONS SHALL BE IN CONFORMANCE WITH THE RECOMMENDATIONS IDENTIFIED IN THE GEOTECHNICAL REPORT PREPARED FOR THE PROJECT. THE CONTRACTOR SHALL HAVE A SIGNED AND SEALED COPY OF THE REPORT ON THE SITE AT ALL TIMES.
12. ALL LANDSCAPE ISLANDS SHALL HAVE A CROWN OF TOPSOIL PRIOR TO LANDSCAPING. REFER TO LANDSCAPE PLAN FOR SPECIFICATIONS.
13. EXISTING DRAINAGE STRUCTURES TO BE INSPECTED PRIOR TO CONSTRUCTION. THE ENGINEER SHALL BE NOTIFIED IF ANY REPAIRS ARE TO BE NEEDED. ALL EXISTING STRUCTURES AND PIPES SHALL BE CLEANED OF SILT AND DEBRIS BEFORE CONSTRUCTION COMMENCES, AND AFTER THE SITE HAS BEEN CONSTRUCTED.
14. IF ANY EXISTING STRUCTURES TO REMAIN ARE DAMAGED DURING CONSTRUCTION IT SHALL BE THE CONTRACTOR'S RESPONSIBILITY TO REPAIR AND/OR REPLACE THE EXISTING STRUCTURE AS NECESSARY TO RETURN IT TO EXISTING CONDITIONS OR BETTER AT NO COST TO THE OWNER.
15. THE CONTRACTOR SHALL ADHERE TO ALL TERMS AND CONDITIONS AS OUTLINED IN THE GENERAL PERMIT FOR STORMWATER DISCHARGE ASSOCIATED WITH CONSTRUCTION ACTIVITIES.
16. CONTRACTOR SHALL ADJUST AND/OR CUT EXISTING PAVEMENT AS NECESSARY TO ASSURE A SMOOTH FIT AND CONTINUOUS GRADE.
17. REFER TO SHEET C-1 FOR LEGEND AND ADDITIONAL NOTES. REFER TO SHEETS 5.1-5.3 FOR DETAILS.

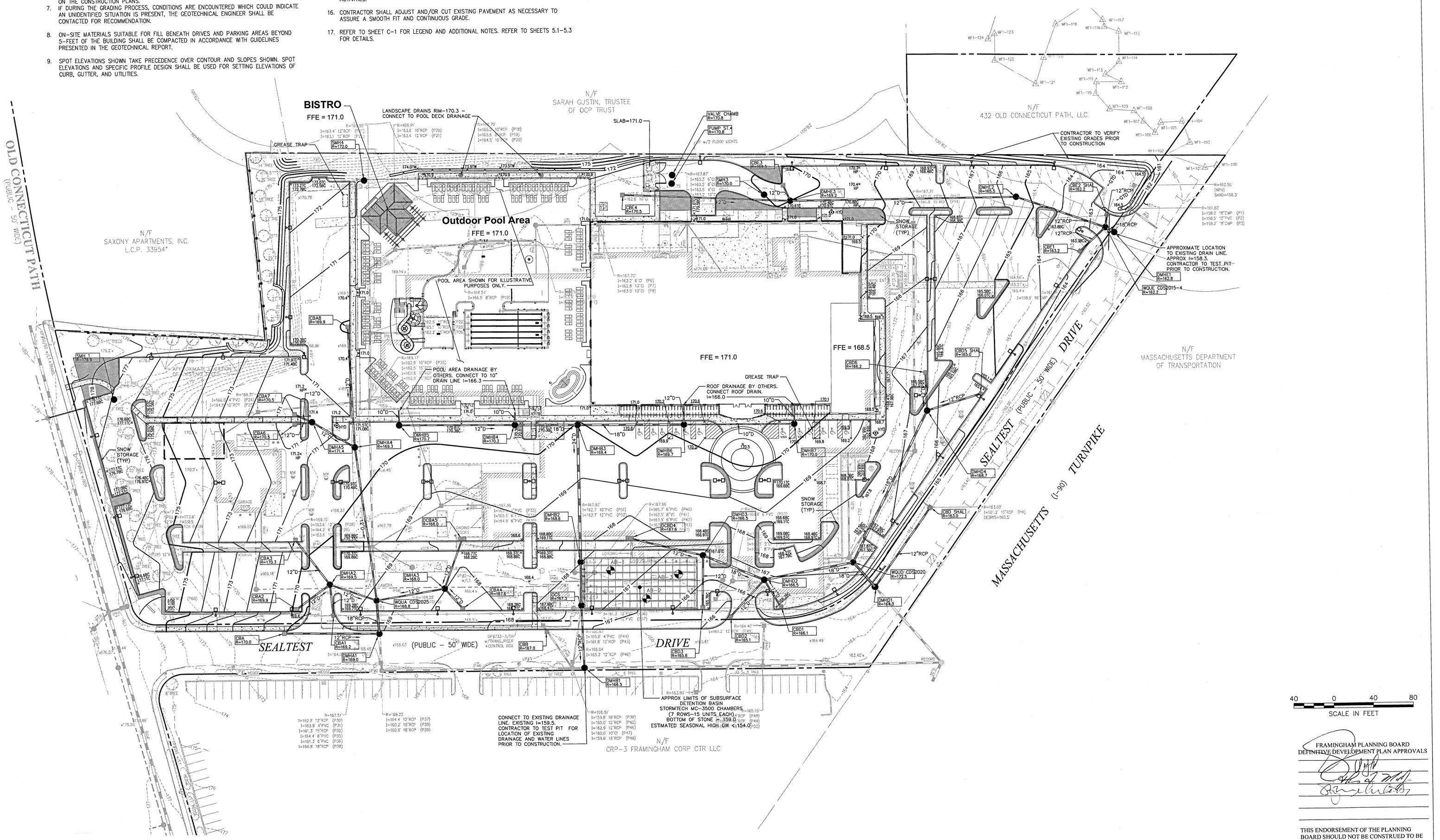

40 0 40 80
SCALE IN FEET

FRAMINGHAM PLANNING BOARD
DEFINITIVE DEVELOPMENT PLAN APPROVALS

THIS ENDORSEMENT OF THE PLANNING BOARD SHOULD NOT BE CONSTRUED TO BE DETERMINATION OF CONFORMANCE WITH ZONING REGULATIONS.

LIFETIME
THE HEALTHY WAY OF LIFE COMPANY
2902 CORPORATE PLACE
CHANHASSEN, MN 55317

CONFIDENTIALITY NOTICE
"BY ACCEPTING THIS MATERIAL, THE RECIPIENT ACKNOWLEDGES AND AGREES THAT THE INFORMATION CONTAINED HEREIN IS OF A CONFIDENTIAL NATURE AND THAT THE RECIPIENT WILL NOT COPY, DISCLOSE, DISTRIBUTE OR OTHERWISE TRANSMIT IN ANY WAY ANYTHING HEREIN, EITHER IN WHOLE OR IN PART, WITHOUT THE PRIOR WRITTEN PERMISSION OF LIFE TIME FITNESS, INC. OR ITS SUBSIDIARIES (THE "COMPANY"), COMPLETING THE POTENTIAL TRANSACTION CONTEMPLATED BY EXCEPT FOR THE SPECIFIC PURPOSE OF ANALYZING AND THIS MATERIAL. THIS MATERIAL REMAINS THE SOLE PROPERTY OF THE COMPANY AND THE COMPANY RESERVES THE RIGHT TO REQUIRE ITS RETURN AT ANY TIME."

NATIONAL DEVELOPMENT

Vanasse Hangen Brustlin, Inc.
Transportation
Land Development
Environmental Services
Union Station, Suite 219
2 Washington Square
Worcester, Massachusetts 01604
508.752.1001 • FAX 508.752.1276

REVISIONS

No.	Revision	Date	Appvd.
1	PERMITTING COORDINATION	5/1/14	CCL

COMMONWEALTH OF MASSACHUSETTS
CRAIG C. LIZOTTE
CIVIL
No. 39967
REGISTERED PROFESSIONAL ENGINEER

PROJECT NAME: LIFE TIME ATHLETIC - FRAMINGHAM	PUBLICATIONS: Issued For Local Approvals	DATE: 02/28/2014	SHEET NO.: C-4
SHEET TITLE: GRADING AND DRAINAGE PLAN	PROJECT ADDRESS: 490 Old Connecticut Path Framingham, MA		APPROVED BY: JWD
			DRAWN BY: BMG
			APPLICATION NUMBER:

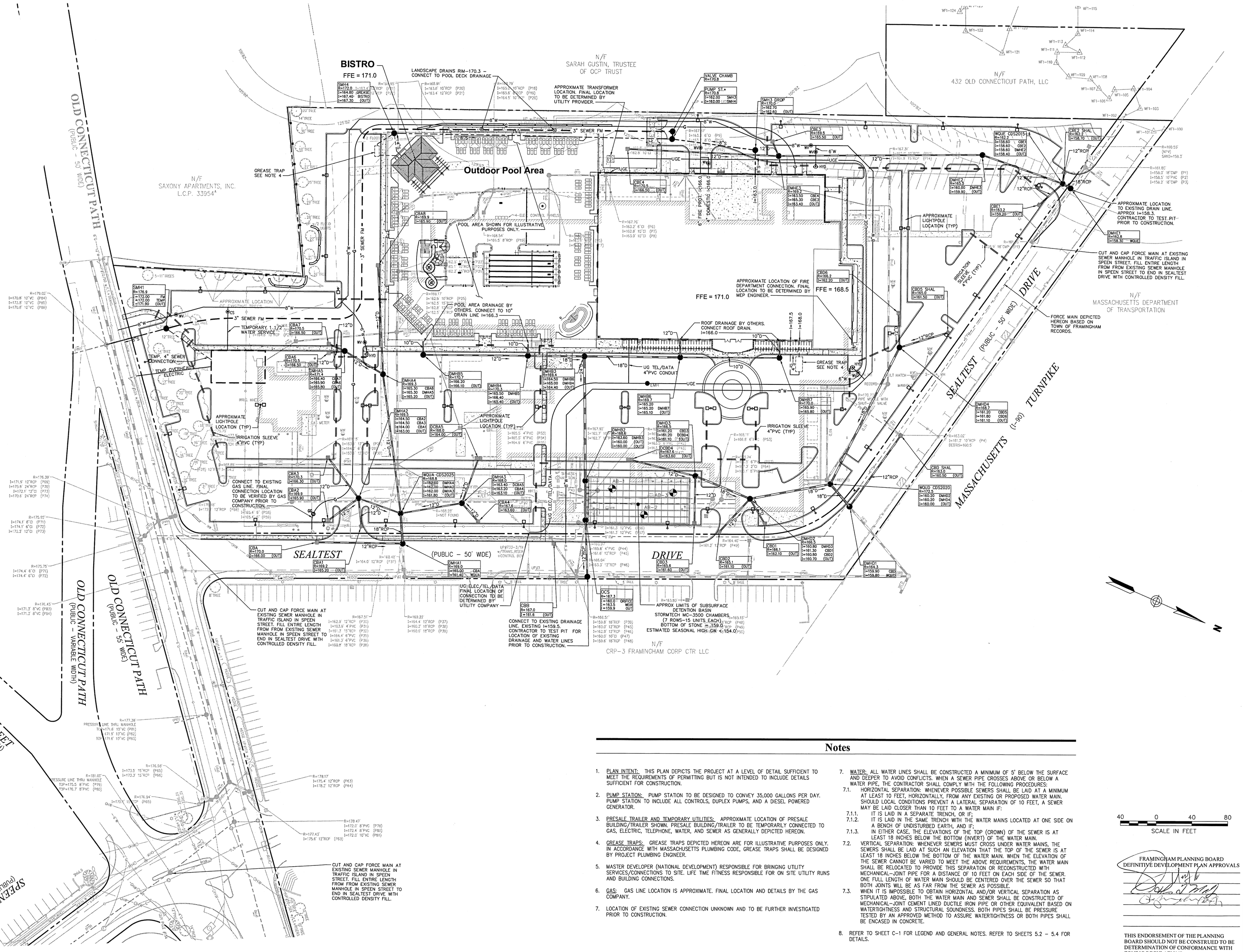

Notes

1. PLAN INTENT: THIS PLAN DEPICTS THE PROJECT AT A LEVEL OF DETAIL SUFFICIENT TO MEET THE REQUIREMENTS OF PERMITTING BUT IS NOT INTENDED TO INCLUDE DETAILS SUFFICIENT FOR CONSTRUCTION.
2. PUMP STATION: PUMP STATION TO BE DESIGNED TO CONVEY 35,000 GALLONS PER DAY. PUMP STATION TO INCLUDE ALL CONTROLS, DUPLEX PUMPS, AND A DIESEL POWERED GENERATOR.
3. PRESALE TRAILER AND TEMPORARY UTILITIES: APPROXIMATE LOCATION OF PRESALE BUILDING/TRAILER SHOWN. PRESALE BUILDING/TRAILER TO BE TEMPORARILY CONNECTED TO GAS, ELECTRIC, TELEPHONE, WATER, AND SEWER AS GENERALLY DEPICTED HEREON.
4. GREASE TRAPS: GREASE TRAPS DEPICTED HEREON ARE FOR ILLUSTRATIVE PURPOSES ONLY. IN ACCORDANCE WITH MASSACHUSETTS PLUMBING CODE, GREASE TRAPS SHALL BE DESIGNED BY PROJECT PLUMBING ENGINEER.
5. MASTER DEVELOPER (NATIONAL DEVELOPMENT) RESPONSIBLE FOR BRINGING UTILITY SERVICES/CONNECTIONS TO SITE. LIFE TIME FITNESS RESPONSIBLE FOR ON SITE UTILITY RUNS AND BUILDING CONNECTIONS.
6. GAS: GAS LINE LOCATION IS APPROXIMATE. FINAL LOCATION AND DETAILS BY THE GAS COMPANY.
7. LOCATION OF EXISTING SEWER CONNECTION UNKNOWN AND TO BE FURTHER INVESTIGATED PRIOR TO CONSTRUCTION.
7. WATER: ALL WATER LINES SHALL BE CONSTRUCTED A MINIMUM OF 5' BELOW THE SURFACE AND DEEPER TO AVOID CONFLICTS. WHEN A SEWER PIPE CROSSES ABOVE OR BELOW A WATER PIPE, THE CONTRACTOR SHALL COMPLY WITH THE FOLLOWING PROCEDURES:
   - 7.1. HORIZONTAL SEPARATION: WHENEVER POSSIBLE SEWERS SHALL BE LAID AT A MINIMUM AT LEAST 10 FEET, HORIZONTALLY, FROM ANY EXISTING OR PROPOSED WATER MAIN. SHOULD LOCAL CONDITIONS PREVENT A LATERAL SEPARATION OF 10 FEET, A SEWER MAY BE LAID CLOSER THAN 10 FEET TO A WATER MAIN IF:
     - 7.1.1. IT IS LAID IN A SEPARATE TRENCH, OR IF;
     - 7.1.2. IT IS LAID IN THE SAME TRENCH WITH THE WATER MAINS LOCATED AT ONE SIDE ON A BENCH OF UNDISTURBED EARTH, AND IF;
     - 7.1.3. IN EITHER CASE, THE ELEVATIONS OF THE TOP (CROWN) OF THE SEWER IS AT LEAST 18 INCHES BELOW THE BOTTOM (INVERT) OF THE WATER MAIN.
   - 7.2. VERTICAL SEPARATION: WHENEVER SEWERS MUST CROSS UNDER WATER MAINS, THE SEWERS SHALL BE LAID AT SUCH AN ELEVATION THAT THE TOP OF THE SEWER IS AT LEAST 18 INCHES BELOW THE BOTTOM OF THE WATER MAIN. WHEN THE ELEVATION OF THE SEWER CANNOT BE VARIED TO MEET THE ABOVE REQUIREMENTS, THE WATER MAIN SHALL BE RELOCATED TO PROVIDE THIS SEPARATION OR RECONSTRUCTED WITH MECHANICAL-JOINT PIPE FOR A DISTANCE OF 10 FEET ON EACH SIDE OF THE SEWER. ONE FULL LENGTH OF WATER MAIN SHOULD BE CENTERED OVER THE SEWER SO THAT BOTH JOINTS WILL BE AS FAR FROM THE SEWER AS POSSIBLE.
   - 7.3. WHEN IT IS IMPOSSIBLE TO OBTAIN HORIZONTAL AND/OR VERTICAL SEPARATION AS STIPULATED ABOVE, BOTH THE WATER MAIN AND SEWER SHALL BE CONSTRUCTED OF MECHANICAL-JOINT CEMENT LINED DUCTILE IRON PIPE OR OTHER EQUIVALENT BASED ON WATERTIGHTNESS AND STRUCTURAL SOUNDNESS. BOTH PIPES SHALL BE PRESSURE TESTED BY AN APPROVED METHOD TO ASSURE WATERTIGHTNESS OR BOTH PIPES SHALL BE ENCASED IN CONCRETE.
8. REFER TO SHEET C-1 FOR LEGEND AND GENERAL NOTES. REFER TO SHEETS 5.2 - 5.4 FOR DETAILS.

40 0 40 80
SCALE IN FEET

FRAMINGHAM PLANNING BOARD
DEFINITIVE DEVELOPMENT PLAN APPROVALS

THIS ENDORSEMENT OF THE PLANNING BOARD SHOULD NOT BE CONSTRUED TO BE DETERMINATION OF CONFORMANCE WITH ZONING REGULATIONS.

LIFETIME
THE HEALTHY WAY OF LIFE COMPANY℠
2902 CORPORATE PLACE
CHANHASSEN, MN 55317

CONFIDENTIALITY NOTICE
"BY ACCEPTING THIS MATERIAL, THE RECIPIENT ACKNOWLEDGES AND AGREES THAT THE INFORMATION CONTAINED HEREIN IS OF A CONFIDENTIAL NATURE AND THAT THE RECIPIENT WILL NOT COPY, DISCLOSE, DISTRIBUTE OR OTHERWISE TRANSMIT IN ANY WAY ANYTHING HEREIN, EITHER IN WHOLE OR IN PART, WITHOUT THE PRIOR WRITTEN PERMISSION OF LIFE TIME FITNESS, INC. OR ITS SUBSIDIARIES (THE "COMPANY"), COMPLETING THE POTENTIAL TRANSACTION CONTEMPLATED BY EXCEPT FOR THE SPECIFIC PURPOSE OF ANALYZING AND THIS MATERIAL.THIS MATERIAL REMAINS THE SOLE PROPERTY OF THE COMPANY AND THE COMPANY RESERVES THE RIGHT TO REQUIRE ITS RETURN AT ANY TIME."

NATIONAL DEVELOPMENT

Vanasse Hangen Brustlin, Inc.
Transportation
Land Development
Environmental Services
Union Station, Suite 219
2 Washington Square
Worcester, Massachusetts 01604
508.752.1001 • FAX 508.752.1276

REVISIONS

No.	Revision	Date	Appvd.
1	PERMITTING COORDINATION	5/1/14	CCL

COMMONWEALTH OF MASSACHUSETTS
CRAIG C. LUZOTTE
CIVIL
No. 39494
REGISTERED PROFESSIONAL ENGINEER

PROJECT NAME: LIFE TIME ATHLETIC - FRAMINGHAM	PUBLICATIONS: Issued For Local Approvals	DATE: 02/28/2014	SHEET NO.: C-5
SHEET TITLE: UTILITY PLAN	PROJECT ADDRESS: 490 Old Connecticut Path, Framingham, MA		APPROVED BY: JWD
			DRAWN BY: BMG
			APPLICATION NUMBER:

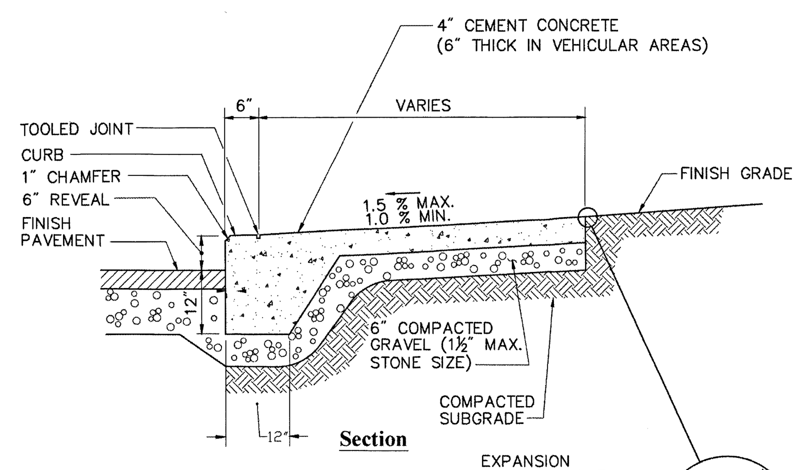

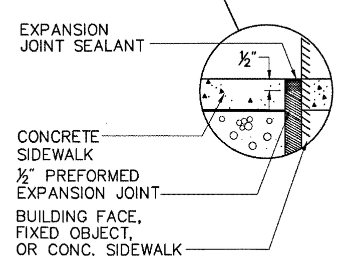

Notes:

1. CONCRETE FOR SIDEWALKS TO BE 4000 PSI AND FOR DRIVEWAYS 5000 PSI. BOTH MIXES TO BE TYPE II, 6% (1.5±) AIR ENTRAINED.
2. PROVIDE EXPANSION JOINTS AT MIN. 30 FT. O.C. WITH PRE- FORMED EXPANSION JOINT FILLER & SEALER.
3. PROVIDE TOOLED CONTROL JOINTS AT 6' O.C.
4. PROVIDE BROOM FINISH IN DIRECTION PERPENDICULAR TO CURB.
5. CONCRETE SURFACE AND SUBSURFACE COMPLY WITH THE RECOMMENDATIONS PROVIDED IN THE GEOTECHNICAL REPORT PREPARED BY SANBORN, HEAD & ASSOCIATES, INC DATED NOVEMBER 5, 2013.

Monolithic Concrete Curb (MCC) & Sidewalk

N.T.S. Source: VHB 12/11 LD_421

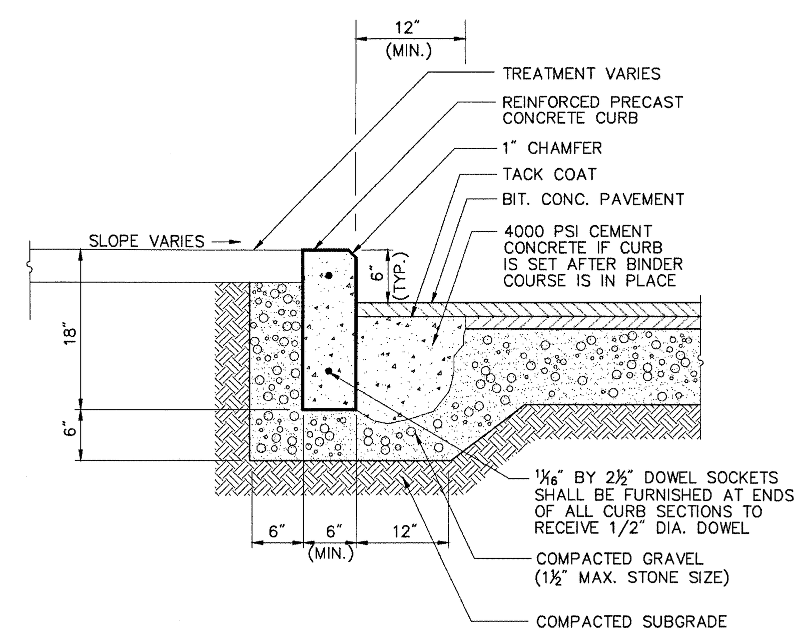

Precast Concrete Curb (PCC)

N.T.S. Source: VHB 12/11 LD_404

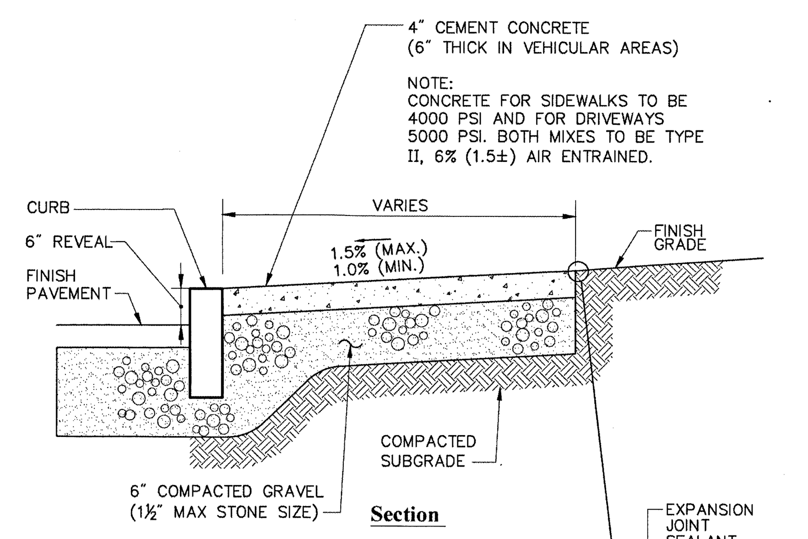

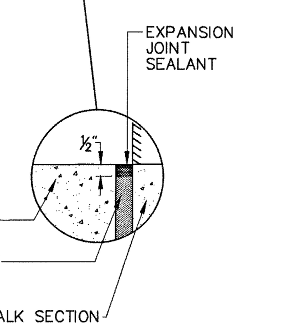

Notes:

1. PROVIDE EXPANSION JOINTS AT MIN. 30 FT. O.C. WITH PRE- FORMED JOINT FILLER.
2. PROVIDE TOOLED CONTROL JOINTS AT 6' O.C.
3. PROVIDE BROOM FINISH IN DIRECTION PERPENDICULAR TO CURB.
4. CONCRETE SURFACE AND SUBSURFACE COMPLY WITH THE RECOMMENDATIONS PROVIDED IN THE GEOTECHNICAL REPORT PREPARED BY SANBORN, HEAD & ASSOCIATES, INC DATED NOVEMBER 5, 2013.

Concrete Sidewalk

N.T.S. Source: VHB 4/11 LD_420

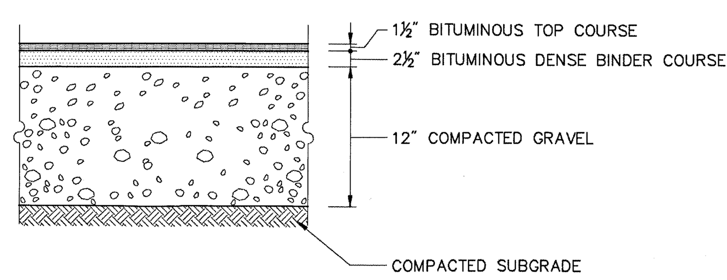

Heavy Duty Flexible Pavement

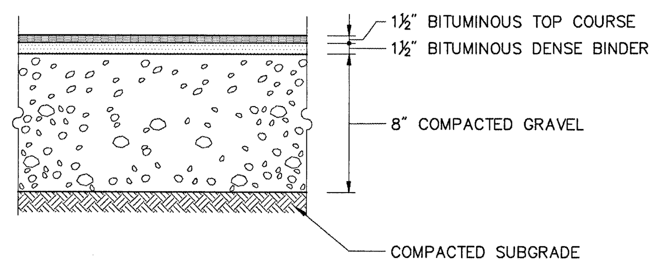

Standard Duty Flexible Pavement

Note:

PAVEMENT SECTIONS ARE BASED ON THE RECOMMENDATIONS PROVIDED IN THE GEOTECHNICAL REPORT PREPARED BY SANBORN, HEAD & ASSOCIATES, INC DATED NOVEMBER 5, 2013.

Bituminous Concrete Pavement Sections

N.T.S. Source: VHB 12/11 LD_430

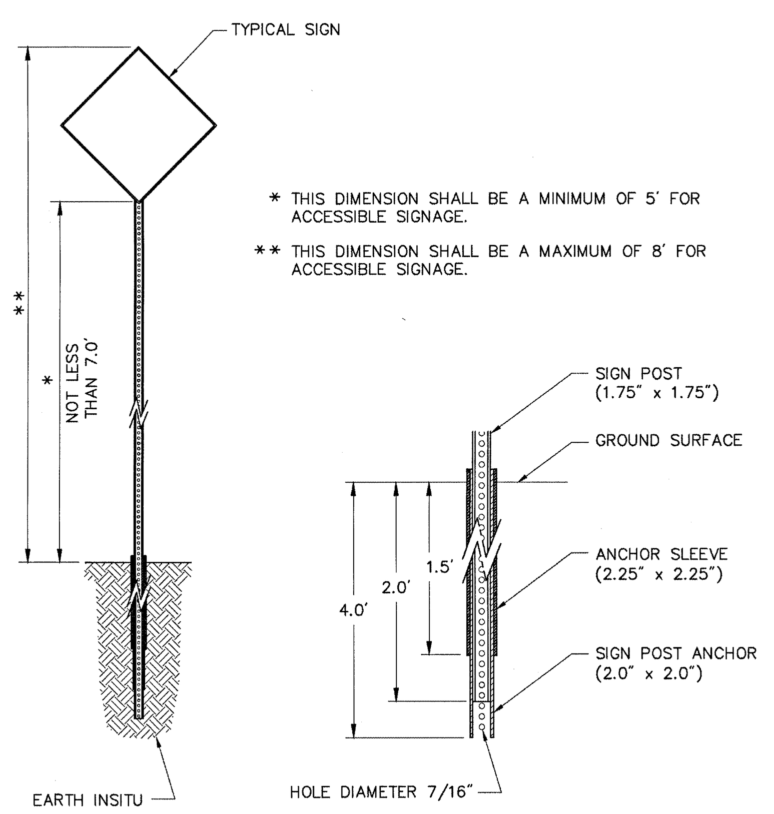

* THIS DIMENSION SHALL BE A MINIMUM OF 5' FOR ACCESSIBLE SIGNAGE.

** THIS DIMENSION SHALL BE A MAXIMUM OF 8' FOR ACCESSIBLE SIGNAGE.

Sign Post - Type 'B'

N.T.S. Source: VHB 12/12 LD_702

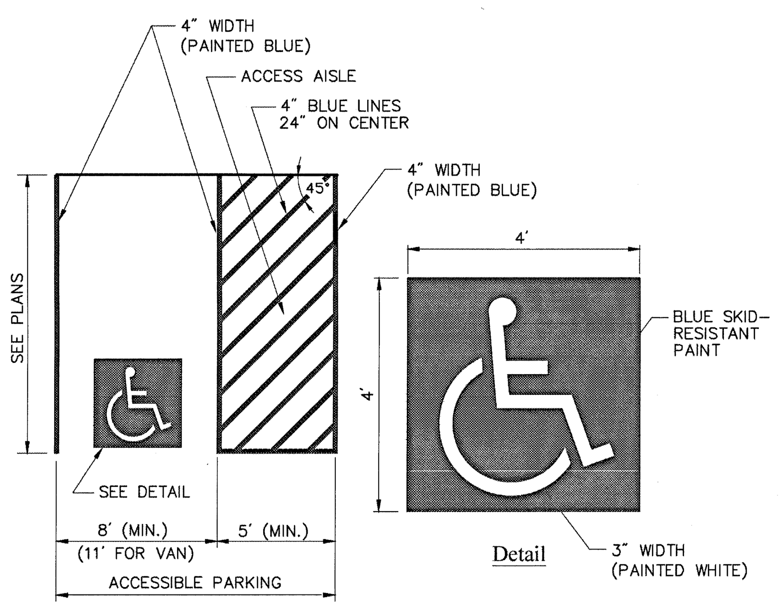

Notes:

1. ALL DIMENSIONS TO EDGES OF 4" PAVEMENT STRIPING.
2. 8' STALL WIDTH REFERS TO 8' CLEAR BETWEEN INSIDE EDGES OF PAVEMENT MARKINGS.
3. ALL SLOPES THROUGHOUT THE ACCESSIBLE PARKING AND AISLE AREAS SHALL NOT EXCEED 1.5%.

Accessible Parking Space

N.T.S. Source: VHB 11/10 LD_552

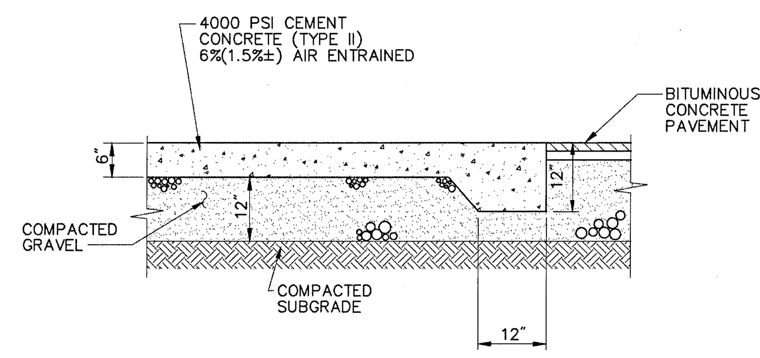

Notes:

1. SIZE OF PAD TO BE AS INDICATED ON PLANS.
2. CONSTRUCTION JOINTS SHALL BE SPACED NO MORE THAN 30 FEET ON CENTER AND SHALL BE EQUALLY SPACED OVER THE LENGTH AND WIDTH OF THE PAD.
3. CONCRETE SURFACE AND SUBSURFACE COMPLY WITH THE RECOMMENDATIONS PROVIDED IN THE GEOTECHNICAL REPORT PREPARED BY SANBORN, HEAD & ASSOCIATES, INC DATED NOVEMBER 5, 2013.

Motorcycle Parking & Surface for Pavers in Drive Aisle

N.T.S. Source: VHB

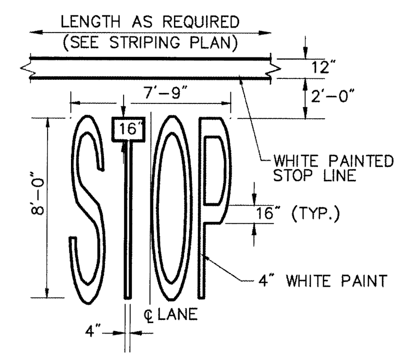

Notes:

1. PAVEMENT MARKINGS TO BE INSTALLED FOR ON SITE WORK IN LOCATIONS SHOWN.

Painted Pavement Markings - On Site

N.T.S. Source: VHB 6/08 LD_554

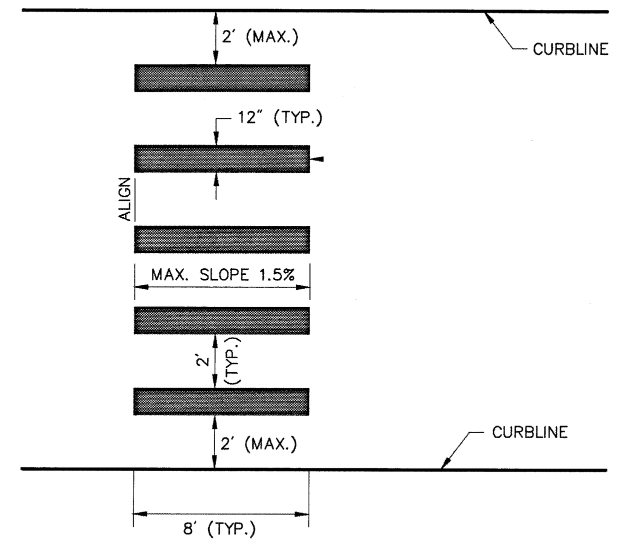

Notes:

1. TWELVE INCH (12") LINES SHALL BE APPLIED IN ONE APPLICATION, NO COMBINATION OF LINES (TWO – 6 INCH LINES) WILL BE ACCEPTED.
2. LONGITUDINAL CROSSWALK LINES TO BE PARALLEL TO CURBLINE.
3. ALL LONGITUDINAL CROSSWALK LINES TO BE THE SAME LENGTH AND PROPERLY ALIGNED.
4. CROSS WALK SIDESLOPE SHALL NOT EXCEED 1.5%.

Crosswalk (On-Site)

N.T.S. Source: VHB 6/08 LD_553

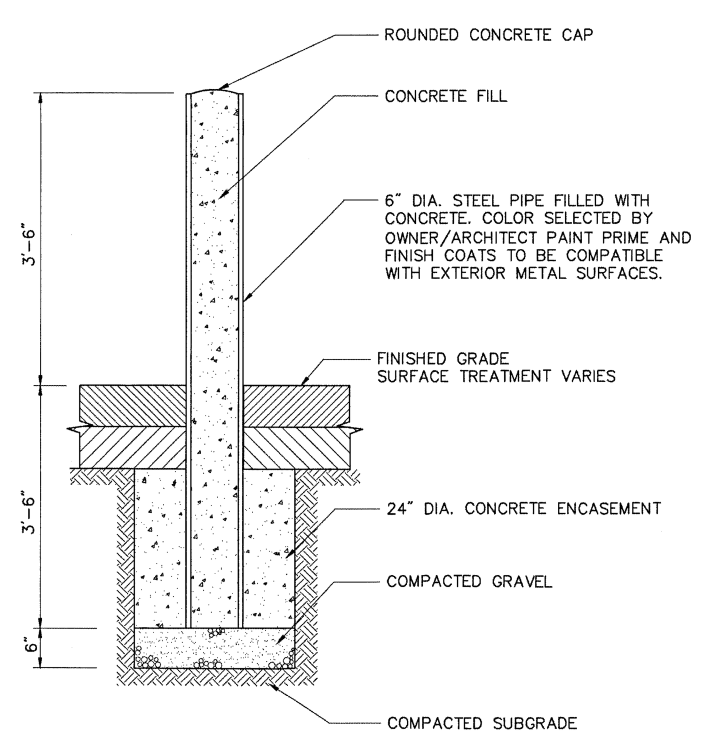

Bollard

N.T.S. Source: VHB 6/08 LD_700

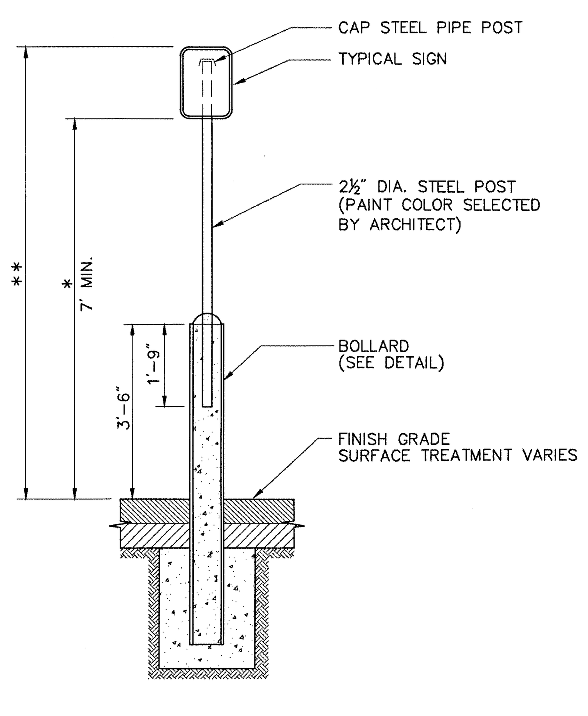

* THIS DIMENSION SHALL BE A MINIMUM OF 5' FOR ACCESSIBLE SIGNAGE.

** THIS DIMENSION SHALL BE A A MAXIMUM OF 8' FOR ACCESSIBLE SIGNAGE.

Bollard Mounted Sign

N.T.S. Source: VHB 4/12 LD_703

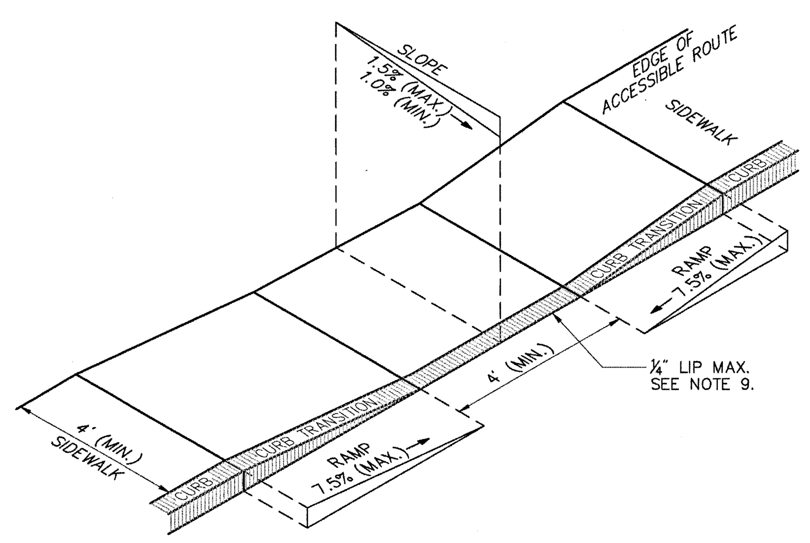

Notes:

1. THE MAXIMUM ALLOWABLE SIDEWALK AND CURB RAMP CROSS SLOPES SHALL BE 1.5 (1% MIN.).
2. THE MAXIMUM ALLOWABLE SLOPE OF ACCESSIBLE ROUTE EXCLUDING CURB RAMPS SHALL BE 5%.
3. THE MAXIMUM ALLOWABLE SLOPE OF ACCESSIBLE ROUTE AT CURB RAMPS SHALL BE 7.5%.
4. A MINIMUM OF 3 FEET CLEAR SHALL BE MAINTAINED AT ANY PERMANENT OBSTACLE IN ACCESSIBLE ROUTE (I.E., HYDRANTS, UTILITY POLES, TREE WELLS, SIGNS, ETC.).
5. CURB TREATMENT VARIES, SEE PLANS FOR CURB TYPE.
6. RAMP, CURB, AND ADJACENT PAVEMENTS SHALL BE GRADED TO PREVENT PONDING.
7. SEE TYPICAL SIDEWALK SECTION FOR RAMP CONSTRUCTION.
8. WHERE ACCESSIBLE ROUTES ARE LESS THAN 5' IN WIDTH (EXCLUDING CURBING) A 5' x 5' PASSING AREA SHALL BE PROVIDED AT INTERVALS NOT TO EXCEED 200 FEET.
9. ELIMINATE CURBING AT RAMP (OTHER THAN VERTICAL CURBING, WHICH SHALL BE SET FLUSH) WHERE IT ABUTS ROADWAY.

Accessible Curb Ramp (ACR) Type 'A'

N.T.S. Source: VHB 11/10 LD_500

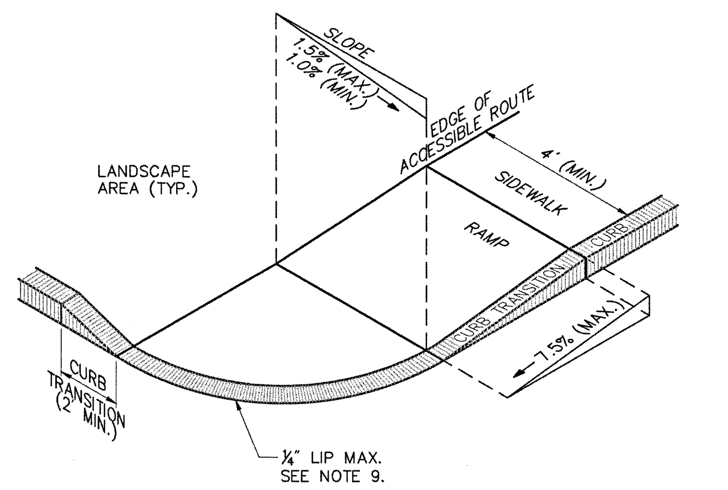

Notes:

1. THE MAXIMUM ALLOWABLE SIDEWALK AND CURB RAMP CROSS SLOPES SHALL BE 1.5 (1% MIN.).
2. THE MAXIMUM ALLOWABLE SLOPE OF ACCESSIBLE ROUTE EXCLUDING CURB RAMPS SHALL BE 5%.
3. THE MAXIMUM ALLOWABLE SLOPE OF ACCESSIBLE ROUTE AT CURB RAMPS SHALL BE 7.5%.
4. A MINIMUM OF 3 FEET CLEAR SHALL BE MAINTAINED AT ANY PERMANENT OBSTACLE IN ACCESSIBLE ROUTE (I.E., HYDRANTS, UTILITY POLES, TREE WELLS, SIGNS, ETC.).
5. CURB TREATMENT VARIES, SEE PLANS FOR CURB TYPE.
6. RAMP, CURB AND ADJACENT PAVEMENTS SHALL BE GRADED TO PREVENT PONDING.
7. SEE TYPICAL SIDEWALK SECTION FOR RAMP CONSTRUCTION.
8. WHERE ACCESSIBLE ROUTES ARE LESS THAN 5' IN WIDTH (EXCLUDING CURBING) A 5' x 5' PASSING AREA SHALL BE PROVIDED AT INTERVALS NOT TO EXCEED 200 FEET.
9. ELIMINATE CURBING AT RAMP WHERE IT ABUTS ROADWAY, EXCEPT WHERE VERTICAL CURBING IS INDICATED ON THE DRAWINGS TO BE INSTALLED AND SET FLUSH.

Accessible Curb Ramp (ACR) - Type 'B'

N.T.S. Source: VHB 9/13 LD_501

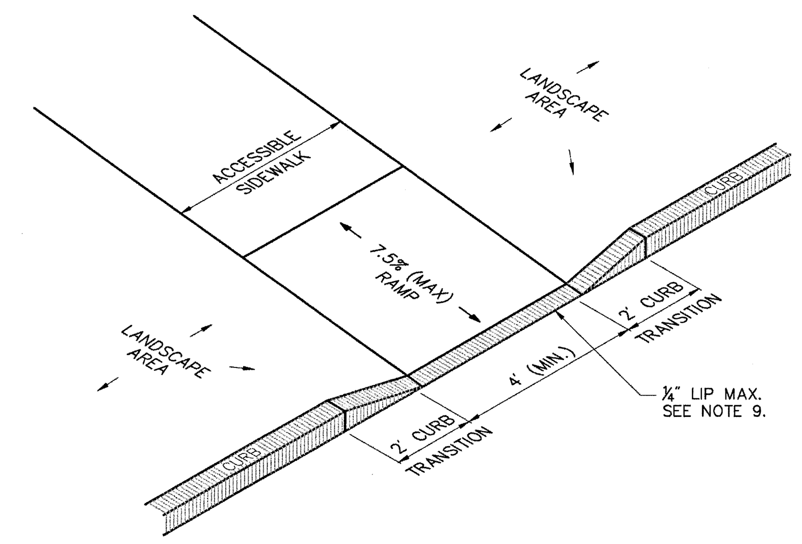

Notes:

1. THE MAXIMUM ALLOWABLE SIDEWALK AND CURB RAMP CROSS SLOPES SHALL BE 1.5 (1% MIN.).
2. THE MAXIMUM ALLOWABLE SLOPE OF ACCESSIBLE ROUTE EXCLUDING CURB RAMPS SHALL BE 5%.
3. THE MAXIMUM ALLOWABLE SLOPE OF ACCESSIBLE ROUTE AT CURB RAMPS SHALL BE 7.5%.
4. A MINIMUM OF 3 FEET CLEAR SHALL BE MAINTAINED AT ANY PERMANENT OBSTACLE IN ACCESSIBLE ROUTE (I.E., HYDRANTS, UTILITY POLES, TREE WELLS, SIGNS, ETC.).
5. CURB TREATMENT VARIES, SEE PLANS FOR CURB TYPE.
6. RAMP, CURB AND ADJACENT PAVEMENTS SHALL BE GRADED TO PREVENT PONDING.
7. TYPICAL SIDEWALK SECTION FOR RAMP SECTION CONSTRUCTION.
8. WHERE ACCESSIBLE ROUTES ARE LESS THAN 5' IN WIDTH (EXCLUDING CURBING) A 5' x 5' PASSING AREA SHALL BE PROVIDED AT INTERVALS NOT TO EXCEED 200 FEET.
9. ELIMINATE CURBING (OTHER THAN VERTICAL CURBING, WHICH SHALL BE SET FLUSH) WHERE IT ABUTS ROADWAY.

Accessible Curb Ramp (ACR) Type 'M'

N.T.S. Source: VHB 11/10 LD_512

Notes

1. PLAN INTENT: THIS PLAN DEPICTS THE PROJECT AT A LEVEL OF DETAIL SUFFICIENT TO MEET THE REQUIREMENTS OF PERMITTING BUT IS NOT INTENDED TO INCLUDE DETAILS SUFFICIENT FOR CONSTRUCTION.

FRAMINGHAM PLANNING BOARD
DEFINITIVE DEVELOPMENT PLAN APPROVALS

THIS ENDORSEMENT OF THE PLANNING BOARD SHOULD NOT BE CONSTRUED TO BE DETERMINATION OF CONFORMANCE WITH ZONING REGULATIONS.

LIFETIME
THE HEALTHY WAY OF LIFE COMPANY℠
2902 CORPORATE PLACE
CHANHASSEN, MN 55317

CONFIDENTIALITY NOTICE
"BY ACCEPTING THIS MATERIAL, THE RECIPIENT ACKNOWLEDGES AND AGREES THAT THE INFORMATION CONTAINED HEREIN IS OF A CONFIDENTIAL NATURE AND THAT THE RECIPIENT WILL NOT COPY, DISCLOSE, DISTRIBUTE OR OTHERWISE TRANSMIT IN ANY WAY ANYTHING HEREIN, EITHER IN WHOLE OR IN PART, WITHOUT THE PRIOR WRITTEN PERMISSION OF LIFE TIME FITNESS, INC. OR ITS SUBSIDIARIES (THE "COMPANY"), COMPLETING THE POTENTIAL TRANSACTION CONTEMPLATED BY EXCEPT FOR THE SPECIFIC PURPOSE OF ANALYZING AND THIS MATERIAL.THIS MATERIAL REMAINS THE SOLE PROPERTY OF THE COMPANY AND THE COMPANY RESERVES THE RIGHT TO REQUIRE ITS RETURN AT ANY TIME."

NATIONAL DEVELOPMENT

Vanasse Hangen Brustlin, Inc.
Transportation
Land Development
Environmental Services
Union Station, Suite 219
2 Washington Square
Worcester, Massachusetts 01604
508.752.1001 • FAX 508.752.1276

REVISIONS

COMMONWEALTH OF MASSACHUSETTS — CRAIG C. LIZOTTE — CIVIL — No. 39967 — REGISTERED PROFESSIONAL ENGINEER

PROJECT NAME	PUBLICATIONS	DATE	SHEET NO.
LIFE TIME ATHLETIC - FRAMINGHAM	Issued For Local Approvals	02/28/2014	C-6.1
SHEET TITLE	PROJECT ADDRESS		APPROVED BY: JWD
SITE DETAILS	490 Old Connecticut Path, Framingham, MA		DRAWN BY: BMG
			APPLICATION NUMBER:

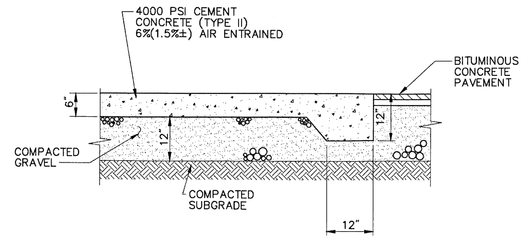

Notes:

1. SIZE OF PAD TO BE AS INDICATED ON PLANS.
2. CONSTRUCTION JOINTS SHALL BE SPACED NO MORE THAN 30 FEET ON CENTER AND SHALL BE EQUALLY SPACED OVER THE LENGTH AND WIDTH OF THE PAD.
3. CONCRETE SURFACE AND SUBSURFACE COMPLY WITH THE RECOMMENDATIONS PROVIDED IN THE GEOTECHNICAL REPORT PREPARED BY SANBORN, HEAD & ASSOCIATES, INC DATED NOVEMBER 5, 2013.

Motorcycle Parking & Surface for Pavers in Drive Aisle

N.T.S. Source: VHB

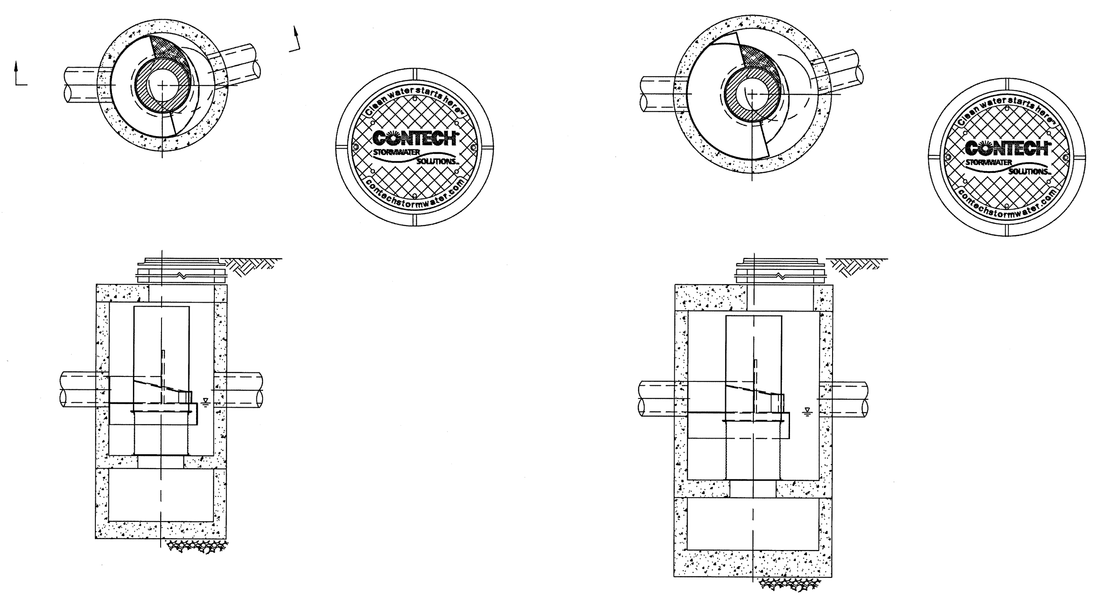

Contech Model: CDS 2015-4 (WQUE)

N.T.S. Source: Contech Engineered Solutions, LLC

Contech Model: CDS 2020 (WQUD)

N.T.S. Source: Contech Engineered Solutions, LLC

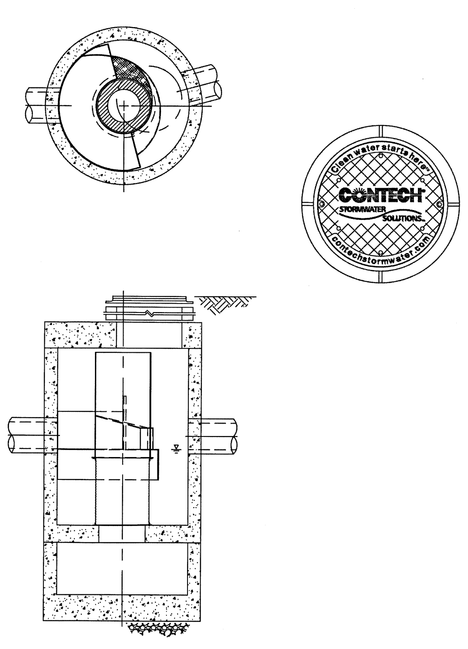

Contech Model: CDS 2025 (WQUA)

N.T.S. Source: Contech Engineered Solutions, LLC

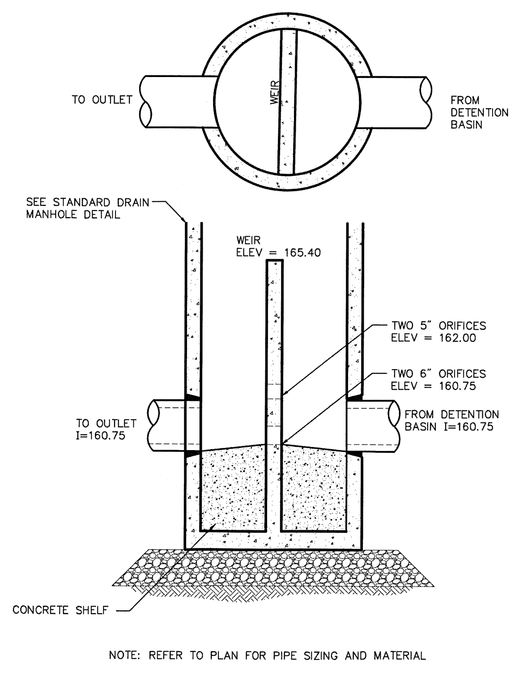

NOTE: REFER TO PLAN FOR PIPE SIZING AND MATERIAL

Outlet Control Structure

N.T.S. Source: VHB 6/08 REV

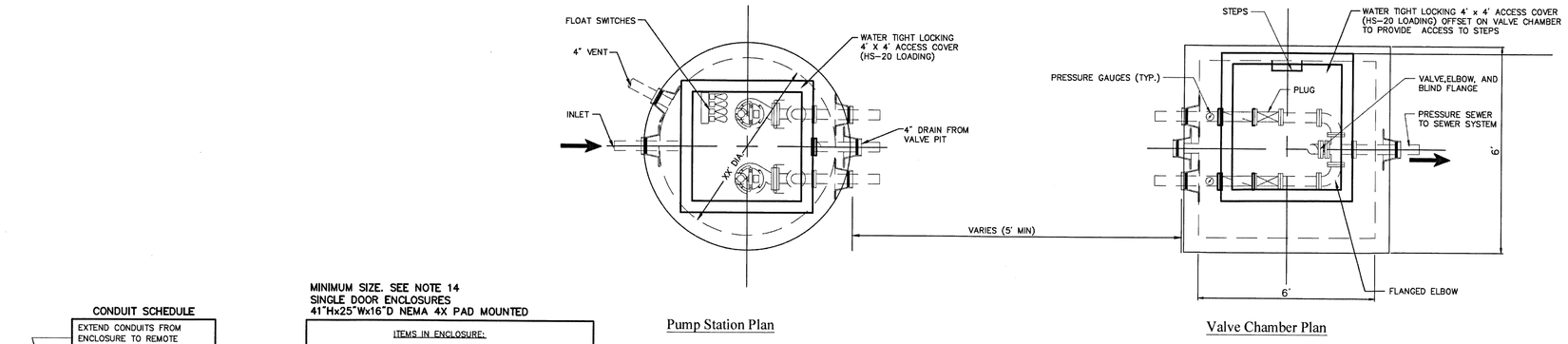

Pump Station Plan

Valve Chamber Plan

CONDUIT SCHEDULE

EXTEND CONDUITS FROM ENCLOSURE TO REMOTE CONTROL PANEL LOCATION.

MINIMUM SIZE. SEE NOTE 14
SINGLE DOOR ENCLOSURES
41"Hx25"Wx16"D NEMA 4X PAD MOUNTED

ITEMS IN ENCLOSURE:

- HEATER
- POWER CABLE JUCTION BOX
- CONTROL JUNCTION BOX
- POWER DISCONNECT SWITCH
- LIGHTING SWITCHES
- GROUNDING

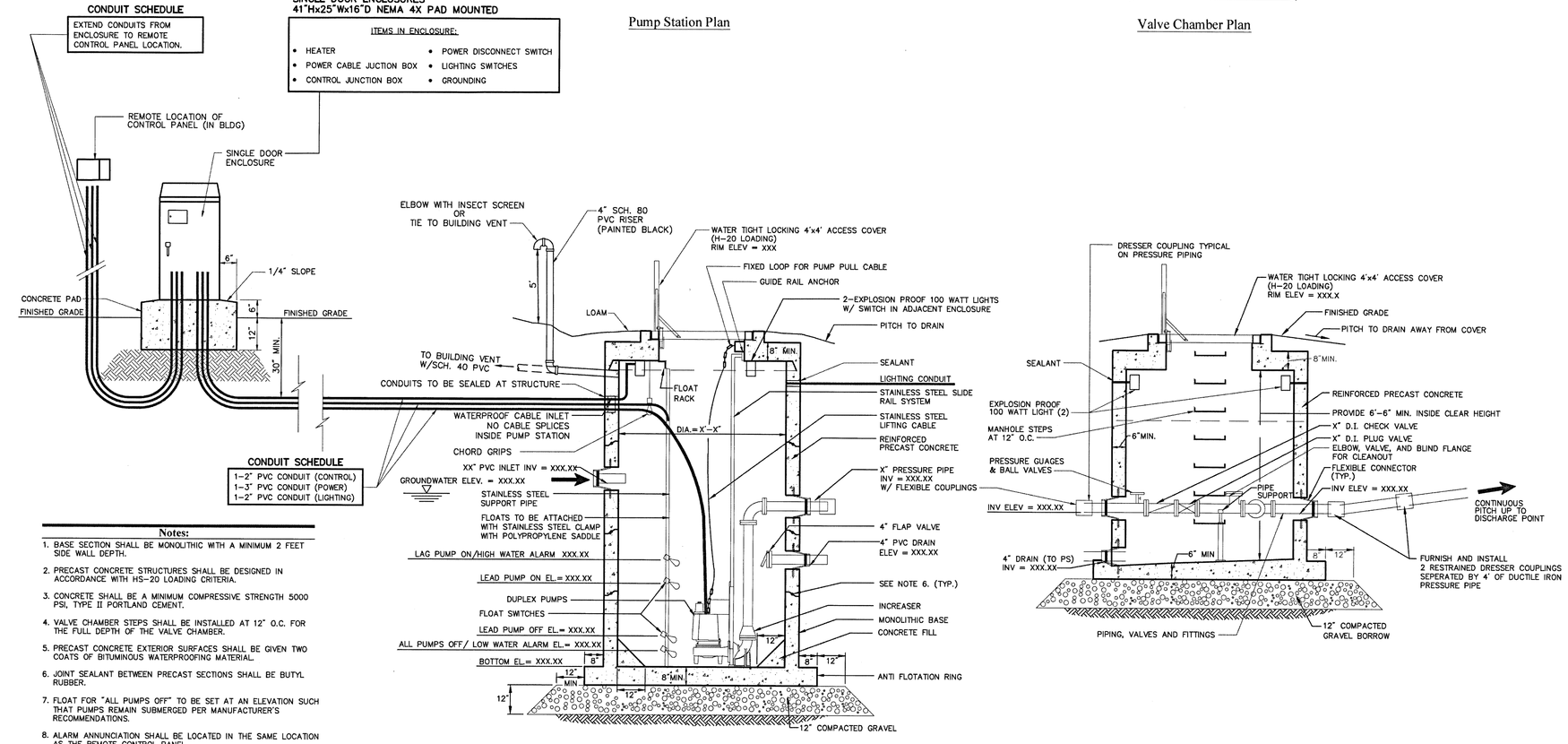

Pump Station Section

Valve Chamber Section

CONDUIT SCHEDULE

1-2" PVC CONDUIT (CONTROL)
1-3" PVC CONDUIT (POWER)
1-2" PVC CONDUIT (LIGHTING)

Notes:

1. BASE SECTION SHALL BE MONOLITHIC WITH A MINIMUM 2 FEET SIDE WALL DEPTH.
2. PRECAST CONCRETE STRUCTURES SHALL BE DESIGNED IN ACCORDANCE WITH HS-20 LOADING CRITERIA.
3. CONCRETE SHALL BE A MINIMUM COMPRESSIVE STRENGTH 5000 PSI, TYPE II PORTLAND CEMENT.
4. VALVE CHAMBER STEPS SHALL BE INSTALLED AT 12" O.C. FOR THE FULL DEPTH OF THE VALVE CHAMBER.
5. PRECAST CONCRETE EXTERIOR SURFACES SHALL BE GIVEN TWO COATS OF BITUMINOUS WATERPROOFING MATERIAL.
6. JOINT SEALANT BETWEEN PRECAST SECTIONS SHALL BE BUTYL RUBBER.
7. FLOAT FOR "ALL PUMPS OFF" TO BE SET AT AN ELEVATION SUCH THAT PUMPS REMAIN SUBMERGED PER MANUFACTURER'S RECOMMENDATIONS.
8. ALARM ANNUNCIATION SHALL BE LOCATED IN THE SAME LOCATION AS THE REMOTE CONTROL PANEL.
9. LOCATE WIRING AND FLOAT RACK ASSEMBLY TO PROVIDE CLEAR ACCESS TO RAISE AND LOWER PUMPS ON THE RAIL SYSTEM.
10. DO NOT GROUT ANULAR RINGS AROUND PIPE GASKETS TO STRUCTURES.
11. ANTI-FLOTATION RING SIZED AS REQUIRED (8 INCH MIN.) ON ALL STRUCTURES.
12. PRESSURE PIPE VALVES AND FITTINGS SHALL BE FLANGED DUCTILE IRON WITHIN AND BETWEEN PUMP STATION AND VALVE CHAMBER WHEN THE PIPE DIAMETER IS 4 INCHES OR LARGER.
13. PRESSURE PIPE VALVES AND FITTINGS SHALL BE SCHEDULE 40 SOLVENT WELDED JOINTS WITHIN AND BETWEEN PUMP STATION AND VALVE CHAMBER WHEN THE PIPE DIAMETER IS LESS THAN 4 INCHES.
14. ENCLOSURE SIZE TO BE DETERMINED BY CONTRACTOR BASED ON PANEL UNITS TO BE INSTALLED WITHIN IT, BUT IN NO CASE SHALL IT BE SMALLER THAN THAT SIZE INDICATED HEREON.

Sewage Pump Station and Valve Chamber (Duplex, Submersible)

N.T.S. Source: VHB 6/08 LD-225

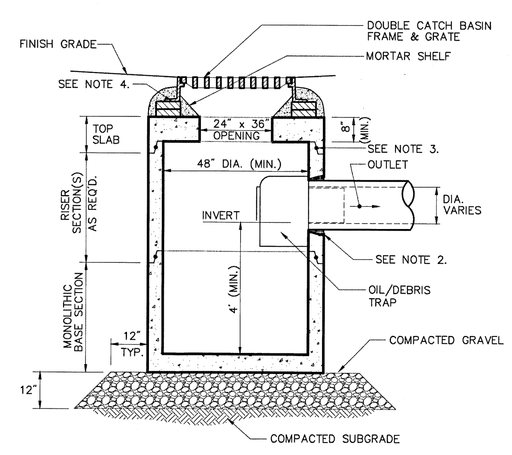

Notes:

1. ALL SECTIONS SHALL BE DESIGNED FOR HS-20 LOADING.
2. PROVIDE OPENINGS FOR PIPES WITH 2" MAX. CLEARANCE TO OUTSIDE OF PIPE. MORTAR ALL PIPE CONNECTIONS.
3. JOINT SEALANT BETWEEN PRECAST SECTIONS SHALL BE BUTYL RUBBER.
4. DOUBLE CATCH BASIN FRAME AND GRATE SHALL BE SET IN FULL MORTAR BED. ADJUST TO GRADE WITH CLAY BRICK AND MORTAR (2 BRICKS TYPICALLY, 5 BRICK COURSES MAXIMUM)

Double Grate Catch Basin (DCB) with Oil/Debris Trap

N.T.S. Source: VHB 6/08 LD_103

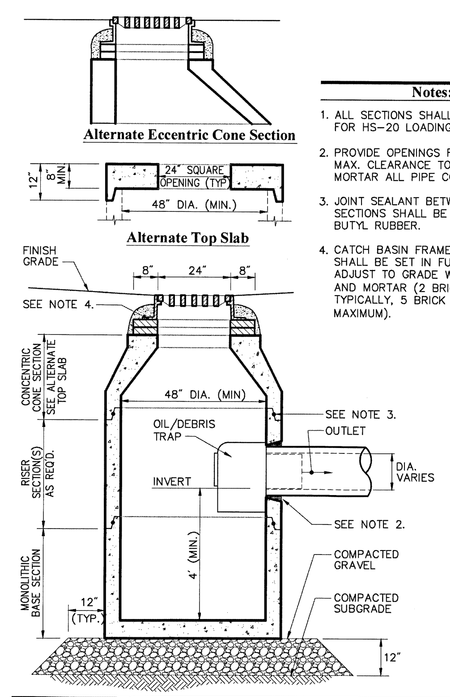

Notes:

1. ALL SECTIONS SHALL BE DESIGNED FOR HS-20 LOADING.
2. PROVIDE OPENINGS FOR PIPES WITH 2" MAX. CLEARANCE TO OUTSIDE OF PIPE. MORTAR ALL PIPE CONNECTIONS.
3. JOINT SEALANT BETWEEN PRECAST SECTIONS SHALL BE PREFORMED BUTYL RUBBER.
4. CATCH BASIN FRAME AND GRATE SHALL BE SET IN FULL MORTAR BED. ADJUST TO GRADE WITH CLAY BRICK AND MORTAR (2 BRICK COURSES TYPICALLY, 5 BRICK COURSES MAXIMUM).

Catch Basin (CB) With Oil/Debris Trap

N.T.S. Source: VHB 6/08 LD_101

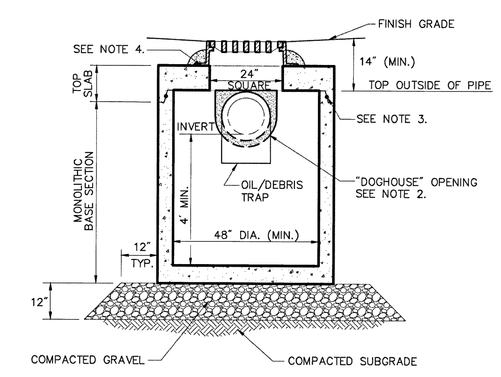

Notes:

1. ALL SECTIONS SHALL BE DESIGNED FOR HS-20 LOADING.
2. PROVIDE DOGHOUSE OPENING FOR PIPES WITH 2" MAX. CLEARANCE TO OUTSIDE OF PIPE. TOP SLAB SHALL NOT REST DIRECTLY ON PIPE. GROUT ALL PIPE CONNECTIONS (NON-SHRINK GROUT).
3. JOINT SEALANT BETWEEN PRECAST SECTIONS SHALL BE PREFORMED BUTYL RUBBER.
4. CATCH BASIN FRAME AND GRATE (4"DEPTH) SHALL BE SET IN FULL MORTAR BED.
5. ADJUST TO FINISH GRADE WITH CLAY BRICK AND MORTAR AS REQUIRED.

Catch Basin (CB) Shallow Cover with Oil/Debris Trap

N.T.S. Source: VHB 6/08 LD_105

Notes

1. PLAN INTENT: THIS PLAN DEPICTS THE PROJECT AT A LEVEL OF DETAIL SUFFICIENT TO MEET THE REQUIREMENTS OF PERMITTING BUT IS NOT INTENDED TO INCLUDE DETAILS SUFFICIENT FOR CONSTRUCTION.

FRAMINGHAM PLANNING BOARD
DEFINITIVE DEVELOPMENT PLAN APPROVALS

THIS ENDORSEMENT OF THE PLANNING BOARD SHOULD NOT BE CONSTRUED TO BE DETERMINATION OF CONFORMANCE WITH ZONING REGULATIONS.

LIFETIME
THE HEALTHY WAY OF LIFE COMPANY
2902 CORPORATE PLACE
CHANHASSEN, MN 55317

CONFIDENTIALITY NOTICE
"BY ACCEPTING THIS MATERIAL, THE RECIPIENT ACKNOWLEDGES AND AGREES THAT THE INFORMATION CONTAINED HEREIN IS OF A CONFIDENTIAL NATURE AND THAT THE RECIPIENT WILL NOT COPY, DISCLOSE, DISTRIBUTE OR OTHERWISE TRANSMIT IN ANY WAY ANYTHING HEREIN, EITHER IN WHOLE OR IN PART, WITHOUT THE PRIOR WRITTEN PERMISSION OF LIFE TIME FITNESS, INC. OR ITS SUBSIDIARIES (THE "COMPANY"), COMPLETING THE POTENTIAL TRANSACTION CONTEMPLATED BY EXCEPT FOR THE SPECIFIC PURPOSE OF ANALYZING AND THIS MATERIAL.THIS MATERIAL REMAINS THE SOLE PROPERTY OF THE COMPANY AND THE COMPANY RESERVES THE RIGHT TO REQUIRE ITS RETURN AT ANY TIME."

NATIONAL DEVELOPMENT

Vanasse Hangen Brustlin, Inc.
Transportation
Land Development
Environmental Services
Union Station, Suite 219
2 Washington Square
Worcester, Massachusetts 01604
508.752.1001 • FAX 508.752.1276

REVISIONS

COMMONWEALTH OF MASSACHUSETTS CRAIG C. LIZOTTE CIVIL No. 39997 REGISTERED PROFESSIONAL ENGINEER

PROJECT NAME	PUBLICATIONS	DATE	SHEET NO.
LIFE TIME ATHLETIC - FRAMINGHAM	Issued For Local Approvals	02/28/2014	C-6.2
SHEET TITLE: SITE DETAILS	PROJECT ADDRESS: 490 Old Connecticut Path Framingham, MA	APPROVED BY: JWD	
		DRAWN BY: BMG	
		APPLICATION NUMBER:	

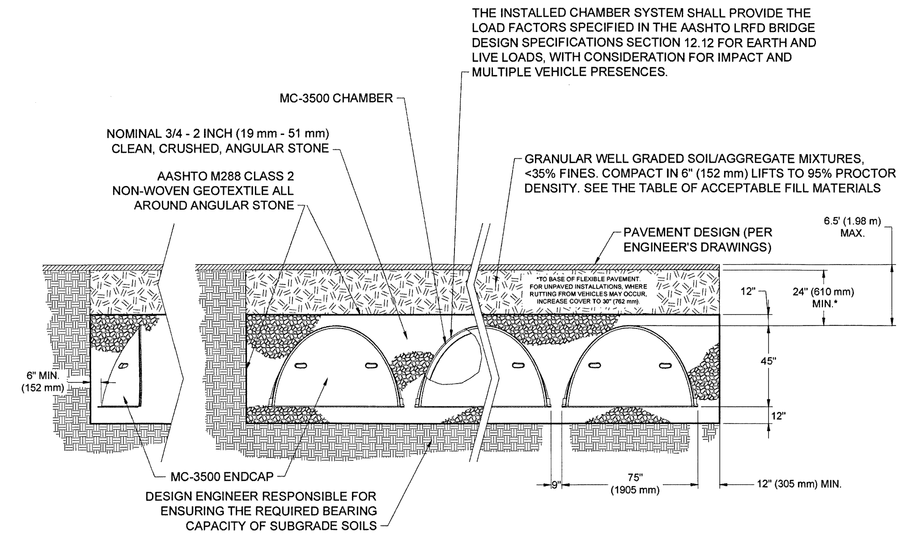

Stormtech MC-3500 Typical Cross-Section

6/12

N.T.S. Source: Stormtech

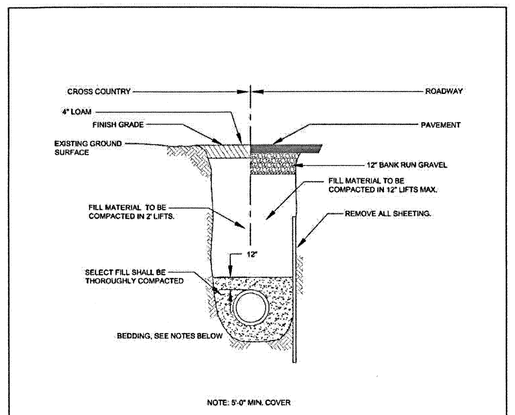

NOTES:

1. TOWN OF FRAMINGHAM MAY REQUIRE FLOWABLE FILL AT ITS DISCRETION.
2. FOR LOCATIONS WHERE LEDGE IS NOT ENCOUNTERED IN TRENCH, PIPE CAN LAY ON UNDISTURBED EARTH, OR ON SAND BEDDING CONSISTENT WITH AWWA GUIDELINES.
3. FOR LOCATIONS WHERE LEDGE IS ENCOUNTERED, SAND BEDDING SHALL BE MINIMUM OF 12" THICK UNDER PIPE.
4. FILL MATERIAL SHALL BE COMPACTED TO 95% PROCTOR DENSITY.

NOT TO SCALE

TOWN OF FRAMINGHAM DEPARTMENT OF PUBLIC WORKS	WATER MAIN TRENCH DETAIL	DATE: MARCH 2011 REV: 2	DETAIL NO. W-2.3.0

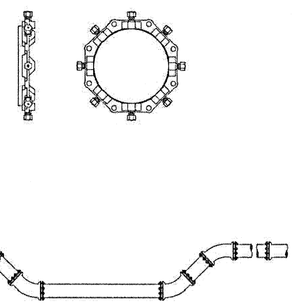

NOTES:

1. DEVICES NEED TO BE PLACED BEYOND THE AREA OF RESTRAINTS IN ACCORDANCE WITH MANUFACTURES RECOMMENDATIONS.

NOT TO SCALE

TOWN OF FRAMINGHAM DEPARTMENT OF PUBLIC WORKS	TYPICAL THRUST RESTRAINT WEDGE ACTION TYPE JOINTS	DATE: SEPT. 2008 REV: 0	DETAIL NO. W-2.2.0

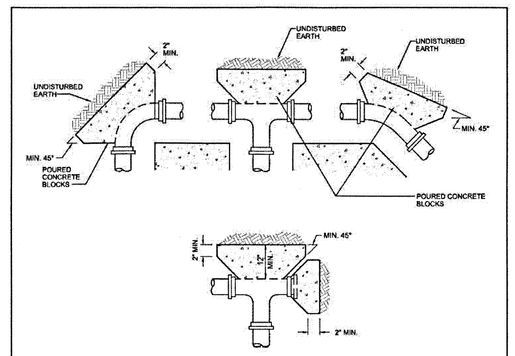

NOTES:

1. SPECIFIC THRUST BLOCK DESIGN SHALL CONFORM TO AWWA GUIDELINES.
2. PLACE 4 mil. POLYETHYLENE BETWEEN CONCRETE AND FITTING (CONCRETE SHALL NOT INTERFERE WITH JOINT).
3. MINIMUM CONCRETE THICKNESS SHALL BE 12 INCHES.
4. THRUST BLOCK ORIENTATION SHALL BE SUCH THAT THE CENTER OF THE FITTING CORRESPONDS WITH THE CENTER OF THE THRUST BLOCK.
5. THE MINIMUM ALLOWABLE ANGLE (EITHER VERTICAL OR HORIZONTAL) SHALL BE 45 DEGREES.

NOT TO SCALE

TOWN OF FRAMINGHAM DEPARTMENT OF PUBLIC WORKS	TYPICAL THRUST BLOCK DETAIL	DATE: SEPT. 2008 REV: 0	DETAIL NO. W-2.2.2

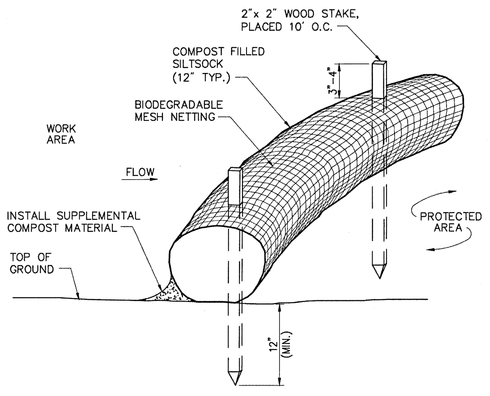

Notes:

1. SILTSOCK SHALL BE FILTREXX SILTSOXX, OR APPROVED EQUAL.
2. SILTSOCKS SHALL OVERLAP A MINIMUM OF 12 INCHES.
3. SILTSOCK SHALL BE INSPECTED PERIODICALLY AND AFTER ALL STORM EVENTS, AND REPAIR OR REPLACEMENT SHALL BE PERFORMED PROMPTLY AS NEEDED.
4. COMPOST MATERIAL SHALL BE DISPERSED ON SITE, AS DETERMINED BY THE ENGINEER.
5. IF NON BIODEGRADABLE NETTING IS USED THE NETTING SHALL BE COLLECTED AND DISPOSED OF OFFSITE.

Siltsock - Erosion Control Barrier

8/12

N.T.S. Source: VHB LD_658

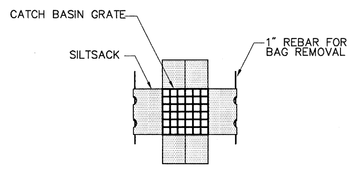

Plan View

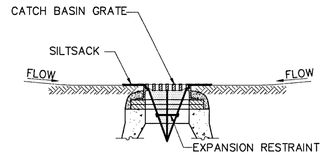

Section View

Notes:

1. INSTALL SILTSACK IN ALL CATCH BASINS WHERE INDICATED ON THE PLAN BEFORE COMMENCING WORK OR IN PAVED AREAS AFTER BINDER COURSE IS PLACED AND HAY BALES HAVE BEEN REMOVED.
2. GRATE TO BE PLACED OVER SILTSACK.
3. SILTSACK SHALL BE INSPECTED PERIODICALLY AND AFTER ALL STORM EVENTS AND CLEANING OR REPLACEMENT SHALL BE PERFORMED PROMPTLY AS NEEDED. MAINTAIN UNTIL UPSTREAM AREAS HAVE BEEN PERMANENTLY STABILIZED

Siltsack Sediment Trap

6/08

N.T.S. Source: VHB LD_674

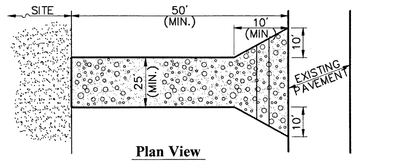

Plan View

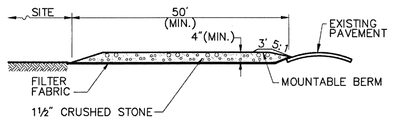

Cross-section

Notes:

1. ENTRANCE WIDTH SHALL BE A TWENTY-FIVE (25) FOOT MINIMUM, BUT NOT LESS THAN THE FULL WIDTH AT POINTS WHERE INGRESS OR EGRESS OCCURS.
2. THE ENTRANCE SHALL BE MAINTAINED IN A CONDITION WHICH SHALL PREVENT TRACKING OR FLOWING OF SEDIMENT ONTO PUBLIC RIGHTS-OF-WAY. THIS MAY REQUIRE PERIODIC TOP DRESSING WITH ADDITIONAL STONE AS CONDITIONS DEMAND AND REPAIR OR CLEANOUT OF ANY MEASURES USED TO TRAP SEDIMENT. ALL SEDIMENT SPILLED, DROPPED, WASHED OR TRACKED ONTO PUBLIC RIGHTS-OF-WAY MUST BE REMOVED IMMEDIATELY. BERM SHALL BE PERMITTED. PERIODIC INSPECTION AND MAINTENANCE SHALL BE PROVIDED AS NEEDED.
3. STABILIZED CONSTRUCTION EXIT SHALL BE REMOVED PRIOR TO FINAL FINISH MATERIALS BEING INSTALLED.

Stabilized Construction Exit

6/08

N.T.S. Source: VHB LD_682

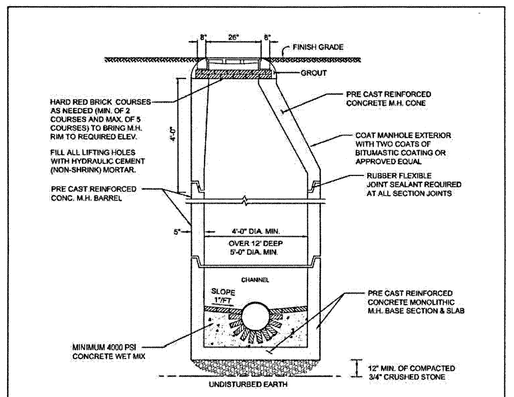

NOTES:

1. TYPICAL SANITARY MANHOLE TO BE 4 FEET IN DIAMETER.
2. 5'-0" DIAMETER FOR ALL MANHOLE DEPTHS GREATER THAN 12 FEET OR WHEN ORDERED BY THE ENGINEER.
3. 6" MIN. WALL THICKNESS AND 7" MIN. BASE THICKNESS WITH 5'-0" DIAMETER MANHOLES.
4. INNER EDGE OF BRICK TABLE TO BE AT ELEVATION OF CROWN OF TOP OF PIPE.
5. DESIGN LOAD - HS20.
6. ALL INVERTS SHALL BE 4,000 PSI CEMENT CONCRETE IN VOID AREAS AND RED SEWER BRICK CONSTRUCTION.
7. INVERTS SHALL NOT BE BUILT ABOVE GRADE. ALL INVERTS SHALL BE BUILT IN PLACE AFTER ALL PIPES HAVE BEEN INSTALLED.

NOT TO SCALE

TOWN OF FRAMINGHAM DEPARTMENT OF PUBLIC WORKS	TYPICAL SEWER MANHOLE	DATE: MARCH 2012 REV: 2	DETAIL NO. S-3.4.0

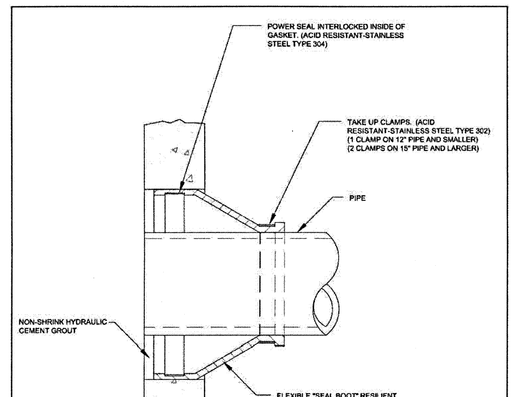

NOT TO SCALE

TOWN OF FRAMINGHAM DEPARTMENT OF PUBLIC WORKS	MANHOLE SEAL (TYPICAL)	DATE: MARCH 2011 REV: 2	DETAIL NO. S-3.4.4

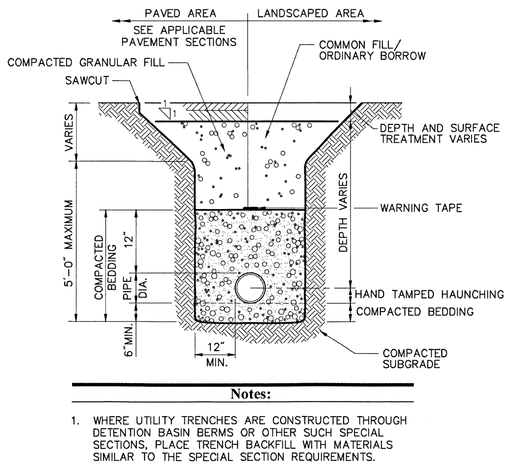

Notes:

1. WHERE UTILITY TRENCHES ARE CONSTRUCTED THROUGH DETENTION BASIN BERMS OR OTHER SUCH SPECIAL SECTIONS, PLACE TRENCH BACKFILL WITH MATERIALS SIMILAR TO THE SPECIAL SECTION REQUIREMENTS.
2. USE METALLIC TRACING/WARNING TAPE OVER ALL PIPES.
3. FOR WATER MAIN AND HDPE DRAIN PIPE TRENCH INFORMATION, REFER TO DETAILS TITLED "WATER MAIN TRENCH DETAIL" AND "TYPICAL HDPE PIPE TRENCH DETAIL" BY TOWN OF FRAMINGHAM.

Utility Trench

8/11

N.T.S. Source: VHB LD_300

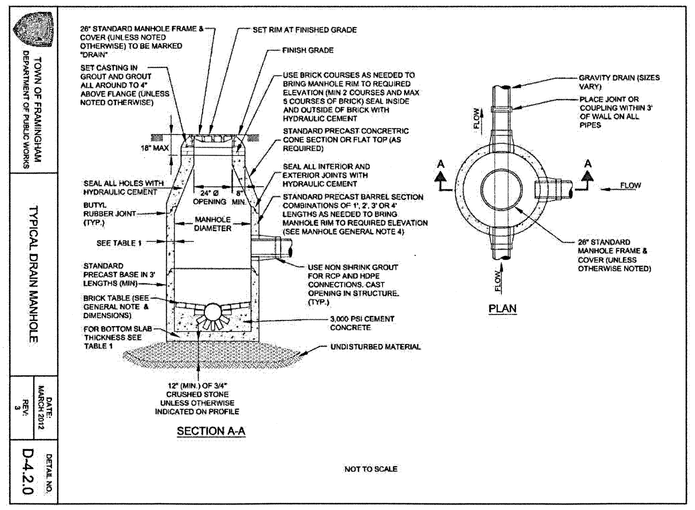

NOT TO SCALE

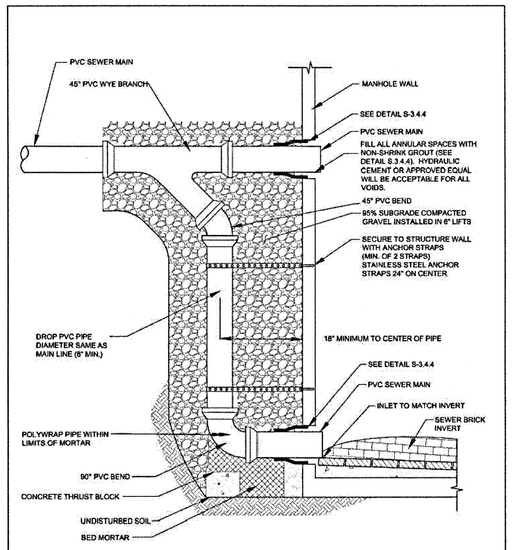

NOT TO SCALE

TOWN OF FRAMINGHAM DEPARTMENT OF PUBLIC WORKS	TYPICAL DROP MANHOLE (OUTSIDE)	DATE: MARCH 2012 REV: 3	DETAIL NO. S-3.4.1

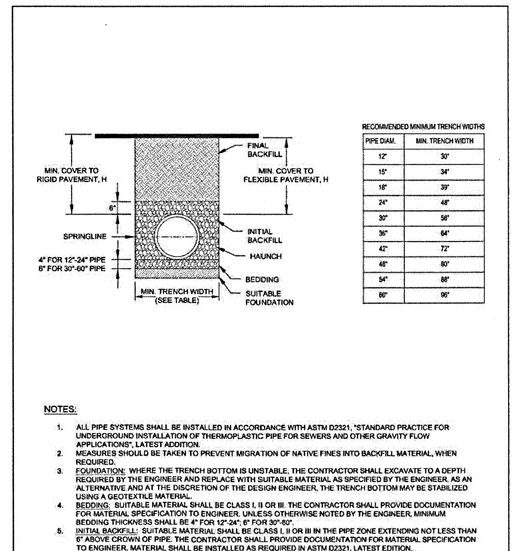

RECOMMENDED MINIMUM TRENCH WIDTHS

PIPE DIAM.	MIN. TRENCH WIDTH
12"	30"
15"	34"
18"	39"
24"	48"
30"	56"
36"	64"
42"	72"
48"	80"
54"	88"
60"	96"

NOTES:

1. ALL PIPE SYSTEMS SHALL BE INSTALLED IN ACCORDANCE WITH ASTM D2321, "STANDARD PRACTICE FOR UNDERGROUND INSTALLATION OF THERMOPLASTIC PIPE FOR SEWERS AND OTHER GRAVITY FLOW APPLICATIONS", LATEST ADDITION.
2. MEASURES SHOULD BE TAKEN TO PREVENT MIGRATION OF NATIVE FINES INTO BACKFILL MATERIAL, WHEN REQUIRED.
3. FOUNDATION: WHERE THE TRENCH BOTTOM IS UNSTABLE, THE CONTRACTOR SHALL EXCAVATE TO A DEPTH REQUIRED BY THE ENGINEER AND REPLACE WITH SUITABLE MATERIAL AS SPECIFIED BY THE ENGINEER. AS AN ALTERNATIVE AND AT THE DISCRETION OF THE DESIGN ENGINEER, THE TRENCH BOTTOM MAY BE STABILIZED USING A GEOTEXTILE MATERIAL.
4. BEDDING: BEDDING MATERIAL SHALL BE CLASS I, II OR III. THE CONTRACTOR SHALL PROVIDE DOCUMENTATION FOR MATERIAL SPECIFICATION TO ENGINEER, UNLESS OTHERWISE NOTED BY THE ENGINEER. MINIMUM BEDDING THICKNESS SHALL BE 4" FOR 12"-24", 6" FOR 30"-60".
5. INITIAL BACKFILL: SUITABLE MATERIAL SHALL BE CLASS I, II, OR III IN THE PIPE ZONE EXTENDING NOT LESS THAN 6" ABOVE CROWN OF PIPE. THE CONTRACTOR SHALL PROVIDE DOCUMENTATION FOR MATERIAL SPECIFICATION TO ENGINEER. MATERIAL SHALL BE INSTALLED AS REQUIRED IN ASTM D2321, LATEST EDITION.
6. MINIMUM COVER: MINIMUM COVER, H, IN NON-TRAFFIC APPLICATIONS (GRASS OR LANDSCAPE AREAS) IS 12" FROM THE TOP OF PIPE TO GROUND SURFACE. ADDITIONAL COVER MAY BE REQUIRED TO PREVENT FLOATION. FOR TRAFFIC APPLICATIONS, MINIMUM COVER, H, IS 36" MEASURED FROM TOP OF PIPE TO BOTTOM OF FLEXIBLE PAVEMENT OR TO TOP OF RIGID PAVEMENT.

NOT TO SCALE

TOWN OF FRAMINGHAM DEPARTMENT OF PUBLIC WORKS	TYPICAL HDPE PIPE TRENCH DETAIL	DATE: SEPT. 2008 REV: 0	DETAIL NO. D-4.5.0

Notes

1. PLAN INTENT: THIS PLAN DEPICTS THE PROJECT AT A LEVEL OF DETAIL SUFFICIENT TO MEET THE REQUIREMENTS OF PERMITTING BUT IS NOT INTENDED TO INCLUDE DETAILS SUFFICIENT FOR CONSTRUCTION.

FRAMINGHAM PLANNING BOARD DEFINITIVE DEVELOPMENT PLAN APPROVALS

THIS ENDORSEMENT OF THE PLANNING BOARD SHOULD NOT BE CONSTRUED TO BE DETERMINATION OF CONFORMANCE WITH ZONING REGULATIONS.

LIFETIME
THE HEALTHY WAY OF LIFE COMPANY
2902 CORPORATE PLACE
CHANHASSEN, MN 55317

CONFIDENTIALITY NOTICE
"BY ACCEPTING THIS MATERIAL, THE RECIPIENT ACKNOWLEDGES AND AGREES THAT THE INFORMATION CONTAINED HEREIN IS OF A CONFIDENTIAL NATURE AND THAT THE RECIPIENT WILL NOT COPY, DISCLOSE, DISTRIBUTE OR OTHERWISE TRANSMIT IN ANY WAY ANYTHING HEREIN, EITHER IN WHOLE OR IN PART, WITHOUT THE PRIOR WRITTEN PERMISSION OF LIFE TIME FITNESS, INC. OR ITS SUBSIDIARIES (THE "COMPANY"), COMPLETING THE POTENTIAL TRANSACTION CONTEMPLATED BY EXCEPT FOR THE SPECIFIC PURPOSE OF ANALYZING AND THIS MATERIAL. THIS MATERIAL REMAINS THE SOLE PROPERTY OF THE COMPANY AND THE COMPANY RESERVES THE RIGHT TO REQUIRE ITS RETURN AT ANY TIME."

NATIONAL DEVELOPMENT

Vanasse Hangen Brustlin, Inc.
Transportation
Land Development
Environmental Services
Union Station, Suite 219
2 Washington Square
Worcester, Massachusetts 01604
508.752.1001 • FAX 508.752.1276

REVISIONS

No.	Revision	Date	Appvd.
1	PERMITTING COORDINATION	5/1/14	CCL

COMMONWEALTH OF MASSACHUSETTS CRAIG C. LIZOTTE CIVIL No. 39997 REGISTERED PROFESSIONAL ENGINEER

PROJECT NAME	PUBLICATIONS	DATE	SHEET NO.
LIFE TIME ATHLETIC - FRAMINGHAM	Issued For Local Approvals	02/28/2014	C-6.3
SHEET TITLE: SITE DETAILS	PROJECT ADDRESS: 490 Old Connecticut Path Framingham, MA		APPROVED BY: JWD
			DRAWN BY: BMG
			APPLICATION NUMBER:

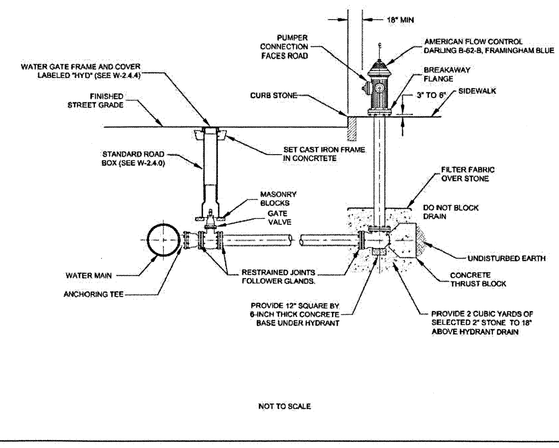

NOT TO SCALE

TOWN OF FRAMINGHAM DEPARTMENT OF PUBLIC WORKS	FIRE HYDRANT INSTALLATION	REV: 2	DATE: MARCH 2010	DETAIL NO. W-2.5.0

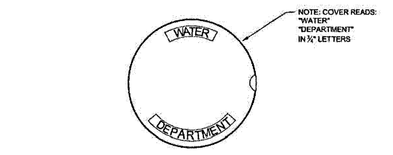

GATE COVER

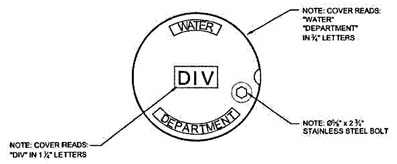

DIVISION GATE COVER

NOT TO SCALE

TOWN OF FRAMINGHAM DEPARTMENT OF PUBLIC WORKS	WATER GATE COVER	DATE: MAR. 2012	REV: 2	DETAIL NO. W-2.4.4

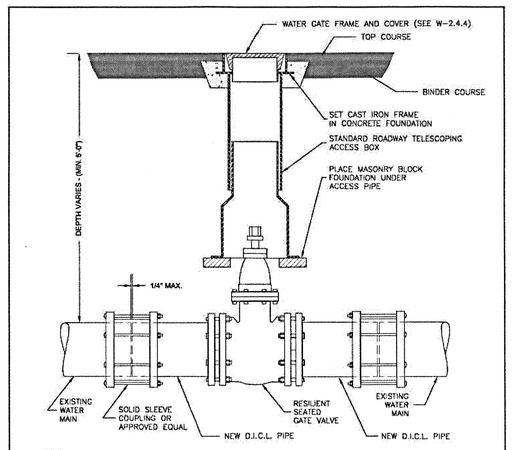

NOTE:
ALL EXCAVATION, BACKFILLING AND PAVING SHALL BE IN ACCORDANCE WITH THE TOWN OF FRAMINGHAM REQUIREMENTS.

NOT TO SCALE

TOWN OF FRAMINGHAM DEPARTMENT OF PUBLIC WORKS	GATE VALVE	DATE: MARCH 2010	REV: 1	DETAIL NO. W-2.4.0

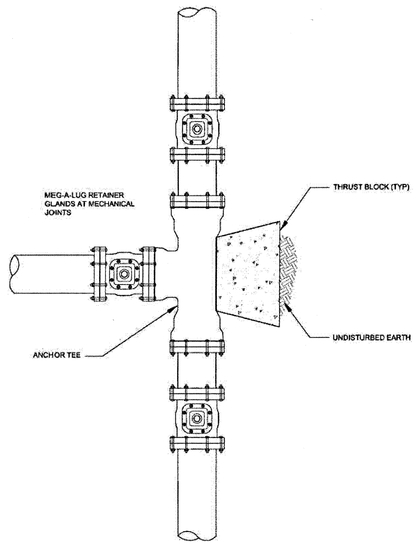

NOT TO SCALE

TOWN OF FRAMINGHAM DEPARTMENT OF PUBLIC WORKS	TYPICAL ANCHOR TEE INSTALLATION	DATE: SEPT. 2008	REV: 0	DETAIL NO. W-2.4.1

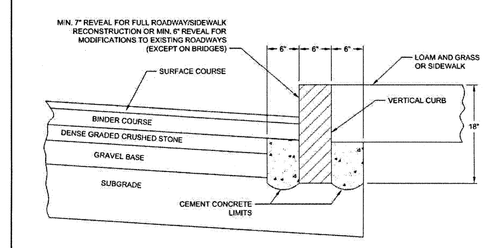

NOTES:

1. CUT NEAT LINE 6" FROM CURB LINE AND REMOVE BASE AND SUBGRADE, REPLACE WITH CEMENT CONCRETE COVER WITH BINDER AND TOP COURSE TO CURB
2. ANY DESIGNATED CEMENT CONCRETE THAT IS ACCEPTABLE UNDER SECTION M4 OF THE STANDARD M+O SPECIFICATIONS MAY BE USED; ALL TEST REQUIREMENTS ARE WAIVED. BITUMINOUS CONCRETE SHALL NOT BE USED AS A SUBSTITUTE.

NOT TO SCALE

TOWN OF FRAMINGHAM DEPARTMENT OF PUBLIC WORKS	GRANITE CURBS	DATE: MARCH 2011	REV: 2	DETAIL NO. R-5.1.2

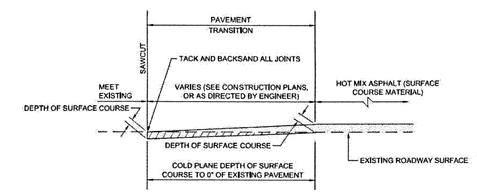

NOTE:
CLEAN SURFACE AND APPLY ASPHALT EMULSION TACK COAT PRIOR TO PLACING HOT MIX ASPHALT SURFACE OVERLAY.

TOWN OF FRAMINGHAM DEPARTMENT OF PUBLIC WORKS	PAVEMENT TRANSITION	DATE: FEB. 2010	REV: 0	DETAIL NO. R-5.1.4

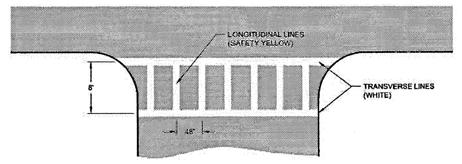

THERMOPLASTIC PAINT PAVEMENT MARKING

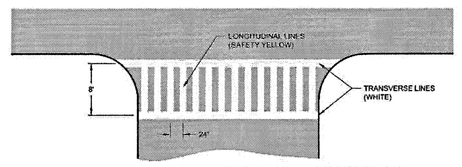

FAST DRYING WATER-BORNE TRAFFIC PAINT PAVEMENT MARKING

NOTES:

1. CROSSWALK MARKINGS SHALL CONSIST OF SOLID WHITE OR YELLOW (AS INDICATED) LINES (BOTH TRANSVERSE AND LONGITUDINAL) 12 INCHES IN WIDTH.
2. CROSSWALKS SHALL BE 8 FEET WIDE.
3. LONGITUDINAL LINES SHALL BE SPACED 48" APART ON CENTER FOR NEW ROADWAYS, 24" APART ON CENTER FOR EXISTING ROADWAYS.
4. CROSSWALK LINES SHALL EXTEND ACROSS THE FULL WIDTH OF PAVEMENT ON TO THE EDGE OF THE INTERSECTING CROSSWALK.
5. CROSSWALKS SHALL BE MARKED AT ALL INTERSECTIONS WHERE THERE IS SUBSTANTIAL CONFLICT BETWEEN VEHICULAR AND PEDESTRIAN MOVEMENT.
6. CROSSWALK MARKINGS FOR NEW ROADWAYS SHALL BE INSTALLED USING THERMOPLASTIC PAVING MARKING MATERIAL TO MEET M+O SPECIFICATIONS M07.01.03 (WHITE) AND M07.01.04 (YELLOW).
7. CROSSWALK MARKINGS FOR EXISTING ROADWAYS SHALL BE INSTALLED USING FAST DRYING WATER-BORNE TRAFFIC PAINT PAVING MARKING MATERIAL TO MEET M+O SPECIFICATIONS M07.01.23 (WHITE) AND M07.01.24 (YELLOW).

NOT TO SCALE

TOWN OF FRAMINGHAM DEPARTMENT OF PUBLIC WORKS	CROSS WALK	DATE: SEPT. 2008	REV: 0	DETAIL NO. R-5.5.0

SCHEDULE OF TIE RODS		
PIPE SIZE	NUMBER OF RODS PER FITTING	DIAMETER OF RODS
4" - 12"	2	3/4"
16"	4	3/4"
20" - 24"	4	1 1/2"

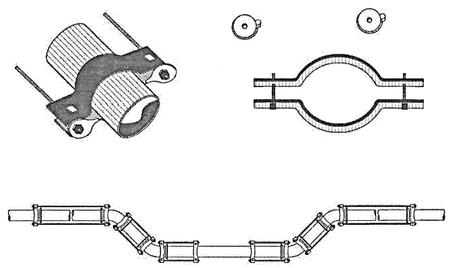

NOT TO SCALE

TOWN OF FRAMINGHAM DEPARTMENT OF PUBLIC WORKS	TYPICAL THRUST RESTRAINTS USING TIE RODS AND FRICTION CLAMPS	DATE: SEPT. 2008	REV: 0	DETAIL NO. W-2.2.1

1. ROADWAY SIDEWALK CROSS SLOPES, FOR BRICK, CEMENT CONCRETE, AND BITUMINOUS CONCRETE, AS INDICATED IN THE CONSTRUCTION STANDARDS, WILL BE 1.5%. A CONSTRUCTION TOLERANCE OF ±0.5% IS ACCEPTABLE ON ROADWAY SIDEWALKS. SIDEWALKS ON BRIDGES WILL BE CONSTRUCTED TO A CROSS SLOPE OF 1.0% IN ACCORD WITH MASSDOT BRIDGE POLICY. IN ACCORDANCE WITH 521 CMR THE RULES AND REGULATIONS OF THE ARCHITECTURAL ACCESS BOARD (ARB), THE SIDEWALK CROSS SLOPE CANNOT EXCEED 2.0%.

2. AN UNOBSTRUCTED PATH OF TRAVEL WITH A MINIMUM WIDTH OF 3'-3" (PREFERED MINIMUM WIDTH OF 5'-0" FOR SIDEWALK MAINTENANCE) SHALL BE MAINTAINED PAST ALL OBSTRUCTIONS (UTILITY POLES, SIGNS, SIGNAL FOUNDATIONS, MASTS, MAILBOXES, ALONG DRIVE OPENINGS, ETC.).

3. THE WHEELCHAIR RAMP SLOPES AND SIDE SLOPES (TRANSITIONS) WILL BE MAXIMUM OF 7.5%, WITH A CONSTRUCTION TOLERANCE OF ±0.5%. HOWEVER THESE SLOPES MAY BE FLATTER WHEN WARRANTED BY SURROUNDING CONDITIONS.

4. WHERE THE ROADWAY PROFILE EXCEEDS 4%, THE HIGH SIDE TRANSITION LENGTH UNDER ANY CONDITIONS NEED NOT EXCEED 10'-0".

5. IN NO CASE WHERE A STOP LINE IS WARRANTED, SHALL A RAMP BE PLACED ON THE TRAFFIC APPROACH SIDE OF THAT STOP LINE.

6. FIXED OBJECTS (I.E. UTILITY POLES, HYDRANTS, SIGNS, SIGNAL FOUNDATIONS, ETC.) MUST NOT ENCROACH ON ANY PART OF THE WHEELCHAIR RAMP INCLUDING TRANSITION SLOPES.

7. AT NO TIME IS ANY PART OF THE WHEELCHAIR RAMP, EXCLUDING CURB TRANSITIONS TO BE LOCATED OUTSIDE THE CROSSWALK. THE WHEELCHAIR RAMP ENTRANCE IS TO BE CENTERED IN THE CROSSWALK WHENEVER POSSIBLE.

8. CATCH BASINS WHICH ARE TO BE LOCATED IN THE VICINITY OF A WHEELCHAIR RAMP SHALL BE LOCATED UPGRADE OF THE RAMP ENTRANCE.

9. THE ENTRANCE OF A WHEELCHAIR RAMP SHALL BE FLUSH WITH THE ROADWAY.

10. TESTING SURFACE: WHEN TESTING WITH A STRAIGHTEDGE PLACED PARALLEL TO THE LINE OF THE SLOPE THERE SHALL BE NO DEVIATION FROM A TRUE SURFACE IN EXCESS OF 2".

11. WHEELCHAIR RAMPS ON BRIDGES SHOULD BE AVOIDED. IF A WHEELCHAIR RAMP IS REQUIRED TO BE PLACED ON A BRIDGE, PRIOR WRITTEN APPROVAL IS REQUIRED. SPECIAL DETAILING OF THE REINFORCEMENT AND CURB SYSTEM WILL BE REQUIRED TO MAINTAIN THE PREFORMANCE OF THE RAILING/BARRIER SYSTEM.

CURB TRANSITION LENGTH FOR WHEELCHAIR RAMPS		
ROADWAY PROFILE GRADE	*HIGH SIDE TRANSITION LENGTH (HST) 6" REVEAL	*HIGH SIDE TRANSITION LENGTH (HST) 7" REVEAL
%		
0	6'-6"	7'-8"
> 0 TO 1	7'-8"	9'-0"
> 1 TO 2	9'-0"	10'-8"
> 2 TO 3	11'-0"	12'-10"
> 3 TO 4	14'-0"	16'-0"
> 4	15'-0" MAX	17'-0" MAX

* BASED ON A DESIGN SLOPE OF 7.5%. VARING CURB REVEAL MAY ALTER HST LENGTH.

TOWN OF FRAMINGHAM DEPARTMENT OF PUBLIC WORKS	WHEELCHAIR RAMP NOTES	DATE: MARCH 2011	REV: 2	DETAIL NO. R-5.3.0

WHEELCHAIR RAMPS SHALL BE CONSTRUCTED IN CONFORMANCE WITH THE CURRENT REGULATIONS OF THE ARCHITECTURAL ACCESS BOARD, THE AMERICANS WITH DISABILITIES ACT AND THE CURRENT MASSHIGHWAY CONSTRUCTION STANDARDS.

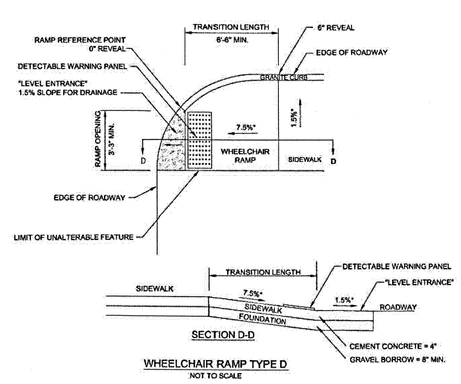

SECTION D-D

WHEELCHAIR RAMP TYPE D
NOT TO SCALE

LEGEND:
HSL = HIGH SIDE TRANSITION LENGTH
W = SIDEWALK WIDTH
W1 = PERPENDICULAR RAMP LENGTH
* = TOLERANCE FOR CONSTRUCTION ±0.5%
USABLE SIDEWALK WIDTH PER AAB IS NOT TO BE LESS THAN 4'-0"
SEE MS 10 & SR FOR DETAILS OF DETECTABLE WARNING PANEL.

TOWN OF FRAMINGHAM DEPARTMENT OF PUBLIC WORKS	WHEELCHAIR RAMP TYPE D	DATE: FEB. 2010	REV: 0	DETAIL NO. R-5.3.4

WHEELCHAIR RAMPS SHALL BE CONSTRUCTED IN CONFORMANCE WITH THE CURRENT REGULATIONS OF THE ARCHITECTURAL ACCESS BOARD, THE AMERICANS WITH DISABILITIES ACT AND THE CURRENT MASSHIGHWAY CONSTRUCTION STANDARDS.

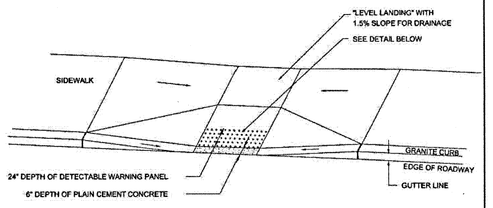

TYPICAL INSTALLATION

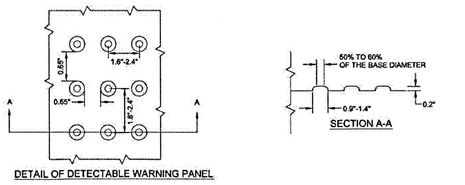

SECTION A-A

DETAIL OF DETECTABLE WARNING PANEL

NOTE:
PANELS SHALL BE "BRICK RED" IN COLOR AND SHALL BE CAST-IN-PLACE WITH WHEELCHAIR RAMP CEMENT CONCRETE. SURFACE APPLIED TACTILE PANELS SHALL NOT BE UTILIZED.

TOWN OF FRAMINGHAM DEPARTMENT OF PUBLIC WORKS	DETECTABLE WARNING PANEL	DATE: MARCH 2011	REV: 1	DETAIL NO. R-5.3.6

Notes

1. PLAN INTENT: THIS PLAN DEPICTS THE PROJECT AT A LEVEL OF DETAIL SUFFICIENT TO MEET THE REQUIREMENTS OF PERMITTING BUT IS NOT INTENDED TO INCLUDE DETAILS SUFFICIENT FOR CONSTRUCTION.

FRAMINGHAM PLANNING BOARD
DEFINITIVE DEVELOPMENT PLAN APPROVALS

THIS ENDORSEMENT OF THE PLANNING BOARD SHOULD NOT BE CONSTRUED TO BE DETERMINATION OF CONFORMANCE WITH ZONING REGULATIONS.

LIFETIME
THE HEALTHY WAY OF LIFE COMPANY SM
2902 CORPORATE PLACE
CHANHASSEN, MN 55317

CONFIDENTIALITY NOTICE
"BY ACCEPTING THIS MATERIAL, THE RECIPIENT ACKNOWLEDGES AND AGREES THAT THE INFORMATION CONTAINED HEREIN IS OF A CONFIDENTIAL NATURE AND THAT THE RECIPIENT WILL NOT COPY, DISCLOSE, DISTRIBUTE OR OTHERWISE TRANSMIT IN ANY WAY ANYTHING HEREIN, EITHER IN WHOLE OR IN PART, WITHOUT THE PRIOR WRITTEN PERMISSION OF LIFE TIME FITNESS, INC. OR ITS SUBSIDIARIES (THE "COMPANY"), COMPLETING THE POTENTIAL TRANSACTION CONTEMPLATED BY EXCEPT FOR THE SPECIFIC PURPOSE OF ANALYZING AND THIS MATERIAL.THIS MATERIAL REMAINS THE SOLE PROPERTY OF THE COMPANY AND THE COMPANY RESERVES THE RIGHT TO REQUIRE ITS RETURN AT ANY TIME."

NATIONAL DEVELOPMENT

Vanasse Hangen Brustlin, Inc.
Transportation
Land Development
Environmental Services
Union Station, Suite 219
2 Washington Square
Worcester, Massachusetts 01604
508.752.1001 • FAX 508.752.1276

REVISIONS

COMMONWEALTH OF MASSACHUSETTS
CRAIG C. LIZOTTE
CIVIL
No. 39967
REGISTERED PROFESSIONAL ENGINEER

PROJECT NAME	PUBLICATIONS	DATE	SHEET NO.
LIFE TIME ATHLETIC - FRAMINGHAM	Issued For Local Approvals	02/28/2014	C-6.4
SHEET TITLE: SITE DETAILS	PROJECT ADDRESS: 490 Old Connecticut Path Framingham, MA	APPROVED BY: JWD	
		DRAWN BY: BMG	
		APPLICATION NUMBER:	

PLANT SCHEDULE LIFETIME FITNESS

DECIDUOUS TREES	QTY	BOTANICAL NAME	COMMON NAME	SIZE
AA	10	Acer rubrum `Armstrong`	`Armstrong` Columnar Maple	2 1/2 - 3" CAL.
AR	35	Acer rubrum `October Glory`	`October Glory` Maple	2 1/2 - 3" CAL.
PL	7	Platanus x acerifolia	London Plane Tree	2 1/2 - 3" CAL.
UP	5	Ulmus americana `Princeton`	American Elm	2 1/2 - 3" CAL.
ZS	15	Zelkova serrata `Green Vase`	Green Vase Zelkova	2 1/2 - 3" CAL.

EVERGREEN TREES	QTY	BOTANICAL NAME	COMMON NAME	SIZE
PG	21	Picea glauca	White Spruce	8 - 10' HT.
PP	13	Picea pungens	Colorado Spruce	8 - 10' HT.

ORNAMENTAL TREES	QTY	BOTANICAL NAME	COMMON NAME	SIZE
BN	5	Betula nigra `Heritage` Clump	Clump Heritage River Birch	10 - 12 FT. HT.
PO	27	Prunus incisa `Okame`	Okame Cherry	2 1/2 - 3" CAL.
PC	54	Pyrus calleryana `Chanticleer`	Chanticleer Pear	2 1/2 - 3" CAL.

SHRUBS	QTY	BOTANICAL NAME	COMMON NAME	SIZE
CS	21	Cornus sericea	Red Osier Dogwood	2 - 2 1/2' HT.
FG	28	Fothergilla gardenii	Dwarf Fothergilla/	24"-30" SPD.
IC	36	Ilex crenata `Convexa`	Convex-leaved Japanese Holly	2 - 2 1/2' HT.
IG	405	Ilex glabra	Inkberry	2 - 2 1/2' HT.
IM	41	Ilex x meserveae `China Girl`	China Girl Holly	2 - 2 1/2' HT.
JH	33	Juniperus chinensis `Hetzii` Columnar	Columnar Hetz Juniper	42" HT.
JS	35	Juniperus scopulorum `Skyrocket`	Skyrocket Columnar Juniper	5 - 6' HT.
JV	9	Juniperus virginiana	Eastern Red Cedar	5 - 6' HT.
LA	132	Leucothoe axillaris	Coastal Leucothoe	18 - 24" SPD
PW	277	Physocarpus opulifolius `Summer Wine`	Summer Wine Ninebark	2 - 3' HT.
PM	13	Pinus mugo mugo	Mugho Pine	24 - 36" SPD.
RC	110	Rhododendron x `Cunningham`s White`	Cunningham`s White Rhododendron	2 - 2 1/2' HT.
RO	50	Rhododendron x `Olga Mezitt`	Olga Mezitt PJM Rhododendron	2 - 2 1/2' HT.
RP	44	Rhododendron x `PJM Compact Form`	PJM Compact Rhododendron	2 - 2 1/2' HT.
SL	122	Spiraea x bumalda `Little Princess`	Little Princess Spirea	15 - 18" SPD.
VS	253	Viburnum plicatum tomentosum `Summer Snowflake`	Summer Snowflake Japanese Snowball	2 - 2 1/2' HT.

SHRUB AREAS	QTY	BOTANICAL NAME	COMMON NAME	SIZE	SPACING
JM	276	Juniperus conferta `Silver Mist`	Silver Mist Juniper	18-24" SPD	24" o.c.
JP	381	Juniperus procumbens `Nana`	Dwarf Japanese Garden Juniper	18-24" SPD	24" o.c.
RF	54	Rosa acicularis `The Fairy`	The Fairy Rose (Min)	18-24" SPD	24" o.c.

ORNAMENTAL GRASSES	QTY	BOTANICAL NAME	COMMON NAME	SIZE	SPACING
FE	26	Festuca glauca `Elijah Blue`	Blue Fescue	1 GAL.	24" o.c.
HO	87	Helictotrichon sempervirens	Blue Oat Grass	#1 Cont.	24" o.c.
PH	1,022	Pennisetum alopecuroides `Hameln`	Hameln Dwarf Fountain Grass	1 GAL.	24" o.c.

PERENNIALS	QTY	BOTANICAL NAME	COMMON NAME	SIZE	SPACING
HR	877	Hemerocallis x `Rosy Returns`	Rosy Returns Daylily	1 GAL.	18" o.c.
HS	563	Hemerocallis x `Stella de Oro`	Stella de Oro Daylily	1 GAL.	18" o.c.

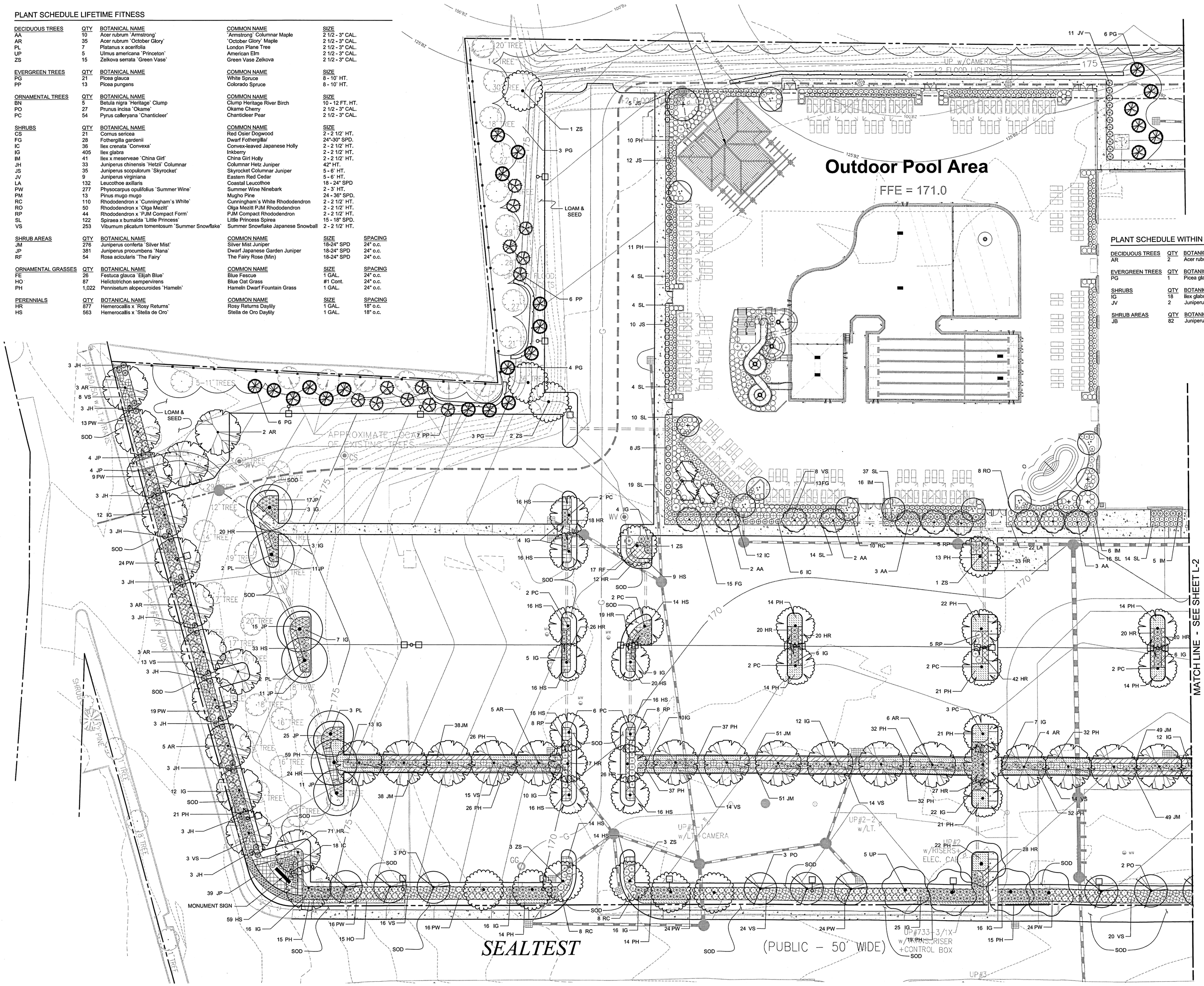

PLANT SCHEDULE WITHIN 125' BUFFERZONE

DECIDUOUS TREES	QTY	BOTANICAL NAME	COMMON NAME	SIZE
AR	2	Acer rubrum `October Glory`	`October Glory` Maple	2 1/2 - 3" CAL.

EVERGREEN TREES	QTY	BOTANICAL NAME	COMMON NAME	SIZE
PG	1	Picea glauca	White Spruce	8 - 10' HT.

SHRUBS	QTY	BOTANICAL NAME	COMMON NAME	SIZE
IG	18	Ilex glabra	Inkberry	2 - 2 1/2' HT.
JV	2	Juniperus virginiana	Eastern Red Cedar	5 - 6' HT.

SHRUB AREAS	QTY	BOTANICAL NAME	COMMON NAME	SIZE	SPACING
JB	82	Juniperus horizontalis `Bar Harbor`	Bar Harbor Creeping Juniper	18-24" SPD	24" o.c.

SEED MIX

CREEPING RED FESCUE	50%
KENTUCKY BLUEGRASS	40%
PERENNIAL RYE	10%

Notes

1. PLAN INTENT: PLANS HAVE BEEN DEVELOPED AT SCHEMATIC DESIGN LEVEL FOR PRELIMINARY PRICING AND DUE DILIGENCE. PLANS ARE NOT SUITABLE FOR PERMITTING OR CONSTRUCTION.
2. GENERAL SITE CONFIGURATION AND BUILDING AND POOL DECK LOCATION, SIZE, AND LAYOUT ARE BASED ON PLANS PROVIDED TO VHB BY LIFE TIME FITNESS ON OCTOBER 8, 2013.
3. PROPOSED GRADING AND DRAINAGE AS DEPICTED HEREON IS AT A SCHEMATIC DESIGN LEVEL. GRADING AND DRAINAGE DESIGN TO BE REFINED FOR PERMITTING AND CONSTRUCTION.

N

20 0 20 40
SCALE IN FEET

FRAMINGHAM PLANNING BOARD
DEFINITIVE DEVELOPMENT PLAN APPROVALS

THIS ENDORSEMENT OF THE PLANNING BOARD SHOULD NOT BE CONSTRUED TO BE DETERMINATION OF CONFORMANCE WITH ZONING REGULATIONS.

LIFETIME
THE HEALTHY WAY OF LIFE COMPANY
2902 CORPORATE PLACE
CHANHASSEN, MN 55317

CONFIDENTIALITY NOTICE
"BY ACCEPTING THIS MATERIAL, THE RECIPIENT ACKNOWLEDGES AND AGREES THAT THE INFORMATION CONTAINED HEREIN IS OF A CONFIDENTIAL NATURE AND THAT THE RECIPIENT WILL NOT COPY, DISCLOSE, DISTRIBUTE OR OTHERWISE TRANSMIT IN ANY WAY ANYTHING HEREIN, EITHER IN WHOLE OR IN PART, WITHOUT THE PRIOR WRITTEN PERMISSION OF LIFE TIME FITNESS, INC. OR ITS SUBSIDIARIES (THE "COMPANY"), COMPLETING THE POTENTIAL TRANSACTION CONTEMPLATED BY EXCEPT FOR THE SPECIFIC PURPOSE OF ANALYZING AND THIS MATERIAL. THIS MATERIAL REMAINS THE SOLE PROPERTY OF THE COMPANY AND THE COMPANY RESERVES THE RIGHT TO REQUIRE ITS RETURN AT ANY TIME."

NATIONAL DEVELOPMENT

VHB
Vanasse Hangen Brustlin, Inc.
Transportation
Land Development
Environmental Services
Union Station, Suite 219
2 Washington Square
Worcester, Massachusetts 01604
508.752.1001 • FAX 508.752.1276

REVISIONS			
1.	RESPONSE TO CONSERVATION COMMISSION COMMENTS	4-15-2014	
2.	PERMITTING COORDINATION	5-1-2014	CCL
3.	PLANNING BOARD COMMENTS	6-4-2014	

MASSACHUSETTS STEPHEN F. DERDERIAN REGISTERED LANDSCAPE ARCHITECT NO. 650

PROJECT NAME	LIFE TIME ATHLETIC - FRAMINGHAM
SHEET TITLE	Planting Plan
PUBLICATIONS	Issued For Local Approvals
DATE	02/28/2014
PROJECT ADDRESS	490 Old Connecticut Path Framingham, MA
SHEET NO.	L-1
APPROVED BY:	JWD
DRAWN BY:	BMG
APPLICATION NUMBER:	

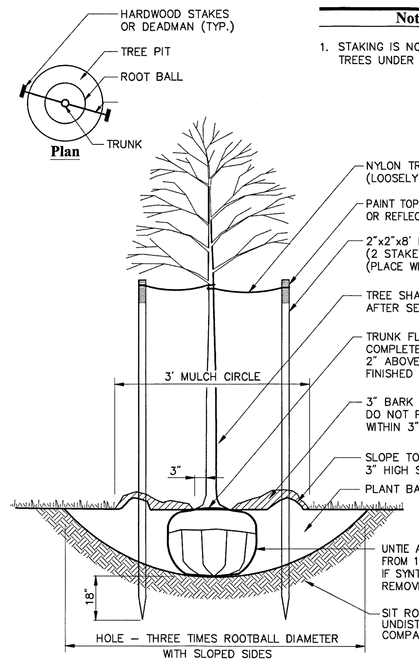

Notes:

1. STAKING IS NOT REQUIRED FOR TREES UNDER 3" CALIPER.

Tree Planting (For Trees Under 4" Caliper)

1/10

N.T.S. Source: VHB LD_602

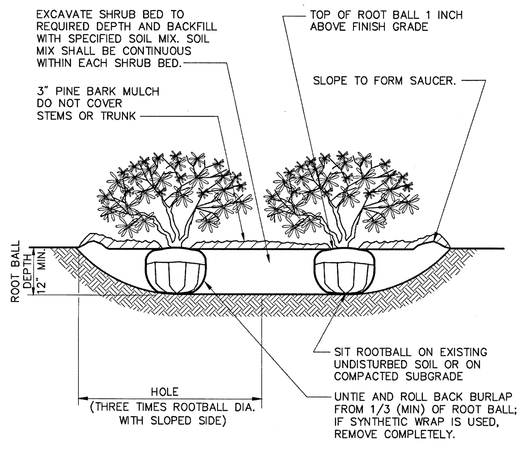

Notes:

1. LOOSEN ROOTS AT THE OUTER EDGE OF ROOTBALL OF CONTAINER GROWN SHRUBS.

Shrub Bed Planting

6/08

N.T.S. Source: VHB LD_601

PLANT SPACING ("A")	ROW SPACING ("B")
6 IN. O.C.	5 IN. O.C.
8 IN. O.C.	7 IN. O.C.
10 IN. O.C.	8–1/2 IN. O.C.
12 IN. O.C.	10–1/2 IN. O.C.
15 IN. O.C.	13 IN. O.C.
18 IN. O.C.	16 IN. O.C.
24 IN. O.C.	21 IN. O.C.

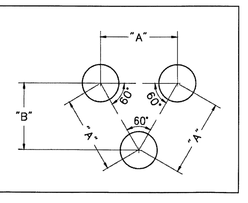

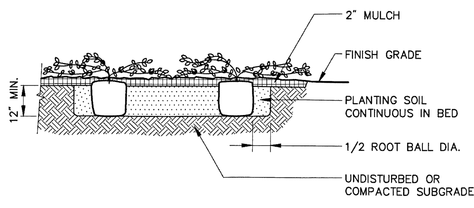

Ground Cover Planting

11/09

N.T.S. Source: VHB LD_615

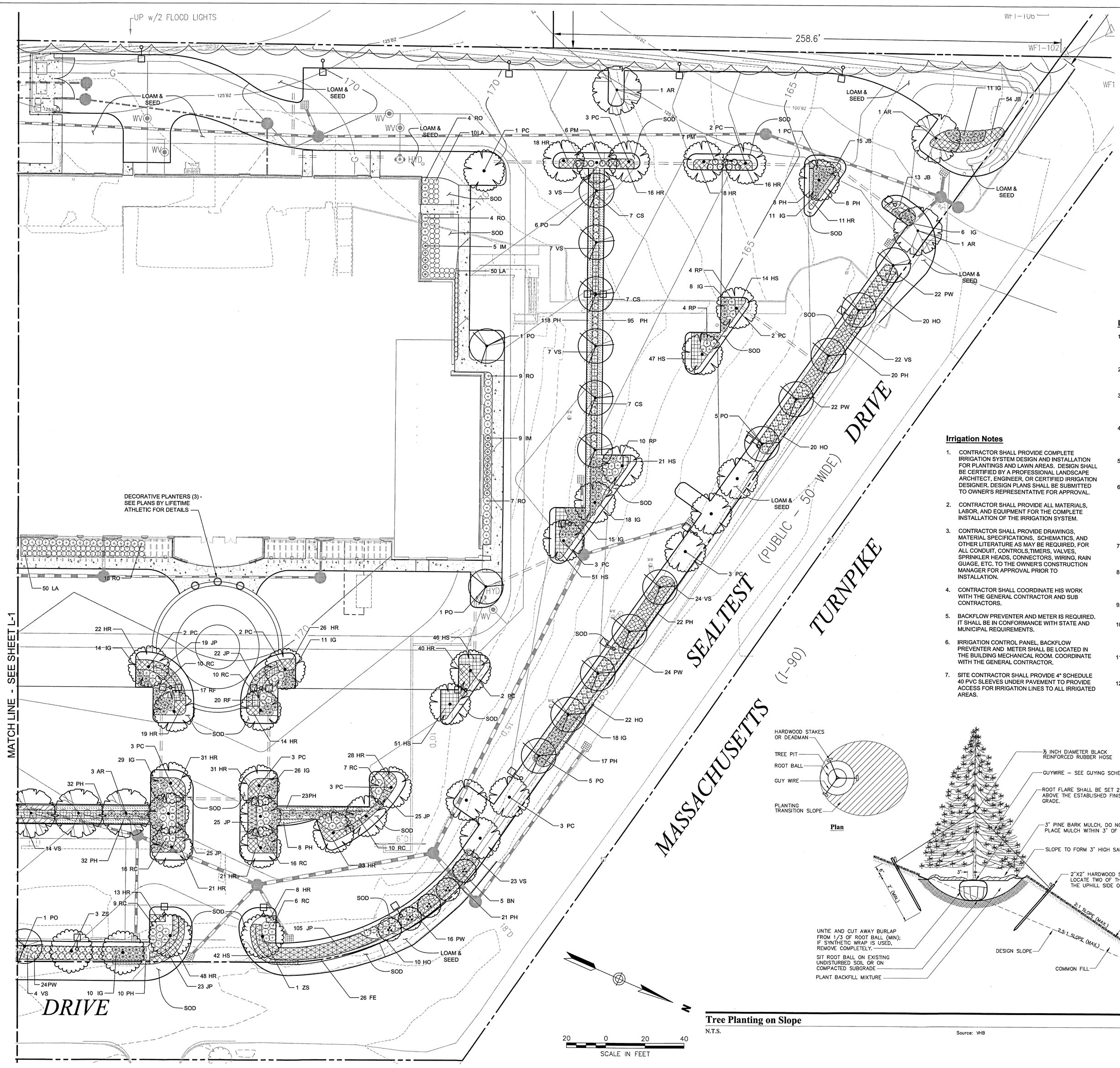

General Notes:

1. PLAN INTENT: THIS PLAN DEPICTS THE PROJECT AT A LEVEL OF DETAIL SUFFICIENT TO MEET THE REQUIREMENTS OF PERMITTING BUT IS NOT INTENDED TO INCLUDE DETAILS SUFFICIENT FOR CONSTRUCTION.

Landscape Notes

1. ALL PROPOSED PLANTING LOCATIONS SHALL BE STAKED AS SHOWN ON THE PLANS FOR FIELD REVIEW AND APPROVAL BY THE LANDSCAPE ARCHITECT PRIOR TO INSTALLATION.
2. CONTRACTOR SHALL VERIFY LOCATIONS OF ALL BELOW GRADE AND ABOVE GROUND UTILITIES AND NOTIFY OWNERS REPRESENTATIVE OF CONFLICTS.
3. NO PLANT MATERIALS SHALL BE INSTALLED UNTIL ALL GRADING AND CONSTRUCTION HAS BEEN COMPLETED IN THE IMMEDIATE AREA. CONTRACTOR SHALL NOTIFY OWNER'S REPRESENTATIVE OF ANY CONFLICT.
4. A 3-INCH DEEP MULCH PER SPECIFICATION SHALL BE INSTALLED UNDER ALL TREES AND SHRUBS, AND IN ALL PLANTING BEDS, UNLESS OTHERWISE INDICATED ON THE PLANS, OR AS DIRECTED BY OWNER'S REPRESENTATIVE.
5. ALL TREES SHALL BE BALLED AND BURLAPPED, UNLESS OTHERWISE NOTED IN THE DRAWINGS OR SPECIFICATION, OR APPROVED BY THE OWNER'S REPRESENTATIVE.
6. FINAL QUANTITY FOR EACH PLANT TYPE SHALL BE AS GRAPHICALLY SHOWN ON THE PLAN. THIS NUMBER SHALL TAKE PRECEDENCE IN CASE OF ANY DISCREPANCY BETWEEN QUANTITIES SHOWN ON THE PLANT LIST AND ON THE PLAN. THE CONTRACTOR SHALL REPORT ANY DISCREPANCIES BETWEEN THE NUMBER OF PLANTS SHOWN ON THE PLANT LIST AND PLANT LABELS PRIOR TO BIDDING.
7. ANY PROPOSED PLANT SUBSTITUTIONS MUST BE REVIEWED BY LANDSCAPE ARCHITECT AND APPROVED IN WRITING BY THE OWNER'S REPRESENTATIVE.
8. ALL PLANT MATERIALS INSTALLED SHALL MEET THE SPECIFICATIONS OF THE "AMERICAN STANDARDS FOR NURSERY STOCK" BY THE AMERICAN ASSOCIATION OF NURSERYMEN AND CONTRACT DOCUMENTS.
9. ALL PLANT MATERIALS SHALL BE GUARANTEED FOR ONE YEAR FOLLOWING DATE OF FINAL ACCEPTANCE.
10. AREAS DESIGNATED "LOAM & SEED" SHALL RECEIVE MINIMUM 6" OF LOAM AND SPECIFIED SEED MIX. LAWNS OVER 2:1 SLOPE SHALL BE PROTECTED WITH EROSION CONTROL FABRIC.
11. ALL DISTURBED AREAS NOT OTHERWISE NOTED ON CONTRACT DOCUMENTS SHALL BE LOAM AND SEEDED OR MULCHED AS DIRECTED BY OWNER'S REPRESENTATIVE.
12. THIS PLAN IS INTENDED FOR PLANTING PURPOSES. REFER TO SITE / CIVIL DRAWINGS FOR ALL OTHER SITE CONSTRUCTION INFORMATION.

Irrigation Notes

1. CONTRACTOR SHALL PROVIDE COMPLETE IRRIGATION SYSTEM DESIGN AND INSTALLATION FOR PLANTINGS AND LAWN AREAS. DESIGN SHALL BE CERTIFIED BY A PROFESSIONAL LANDSCAPE ARCHITECT, ENGINEER, OR CERTIFIED IRRIGATION DESIGNER. DESIGN PLANS SHALL BE SUBMITTED TO OWNER'S REPRESENTATIVE FOR APPROVAL.
2. CONTRACTOR SHALL PROVIDE ALL MATERIALS, LABOR, AND EQUIPMENT FOR THE COMPLETE INSTALLATION OF THE IRRIGATION SYSTEM.
3. CONTRACTOR SHALL PROVIDE DRAWINGS, MATERIAL SPECIFICATIONS, SCHEMATICS, AND OTHER LITERATURE AS MAY BE REQUIRED, FOR ALL CONDUIT, CONTROLS,TIMERS, VALVES, SPRINKLER HEADS, CONNECTORS, WIRING, RAIN GUAGE, ETC. TO THE OWNER'S CONSTRUCTION MANAGER FOR APPROVAL PRIOR TO INSTALLATION.
4. CONTRACTOR SHALL COORDINATE HIS WORK WITH THE GENERAL CONTRACTOR AND SUB CONTRACTORS.
5. BACKFLOW PREVENTER AND METER IS REQUIRED. IT SHALL BE IN CONFORMANCE WITH STATE AND MUNICIPAL REQUIREMENTS.
6. IRRIGATION CONTROL PANEL, BACKFLOW PREVENTER AND METER SHALL BE LOCATED IN THE BUILDING MECHANICAL ROOM. COORDINATE WITH THE GENERAL CONTRACTOR.
7. SITE CONTRACTOR SHALL PROVIDE 4" SCHEDULE 40 PVC SLEEVES UNDER PAVEMENT TO PROVIDE ACCESS FOR IRRIGATION LINES TO ALL IRRIGATED AREAS.

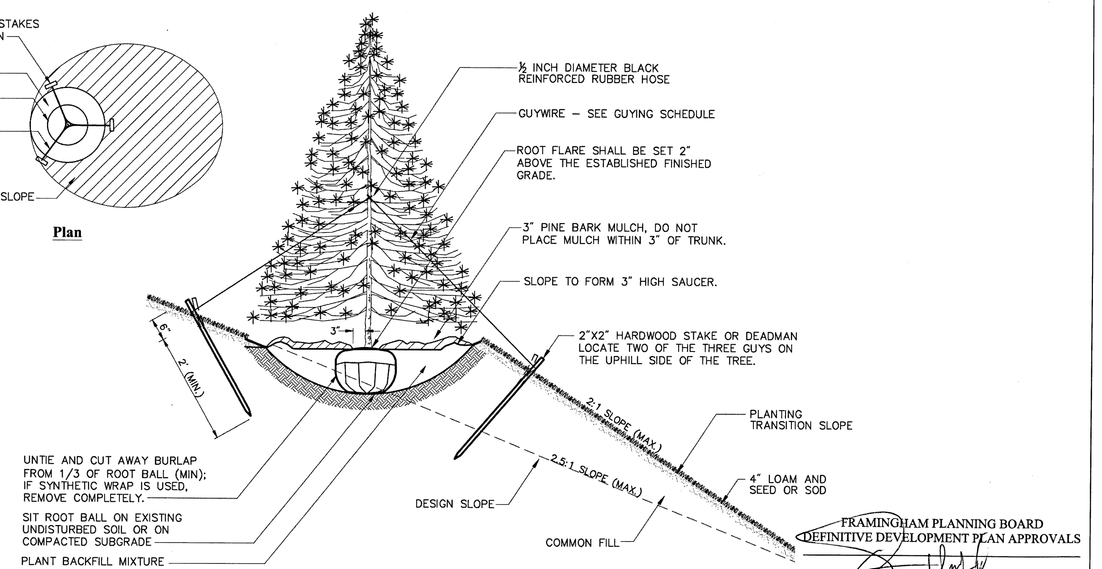

Tree Planting on Slope

N.T.S. Source: VHB

FRAMINGHAM PLANNING BOARD
DEFINITIVE DEVELOPMENT PLAN APPROVALS

THIS ENDORSEMENT OF THE PLANNING BOARD SHOULD NOT BE CONSTRUED TO BE DETERMINATION OF CONFORMANCE WITH ZONING REGULATIONS.

LIFETIME
THE HEALTHY WAY OF LIFE COMPANY℠
2902 CORPORATE PLACE
CHANHASSEN, MN 55317

CONFIDENTIALITY NOTICE
"BY ACCEPTING THIS MATERIAL, THE RECIPIENT ACKNOWLEDGES AND AGREES THAT THE INFORMATION CONTAINED HEREIN IS OF A CONFIDENTIAL NATURE AND THAT THE RECIPIENT WILL NOT COPY, DISCLOSE, DISTRIBUTE OR OTHERWISE TRANSMIT IN ANY WAY ANYTHING HEREIN, EITHER IN WHOLE OR IN PART, WITHOUT THE PRIOR WRITTEN PERMISSION OF LIFE TIME FITNESS, INC. OR ITS SUBSIDIARIES (THE "COMPANY"), COMPLETING THE POTENTIAL TRANSACTION CONTEMPLATED BY EXCEPT FOR THE SPECIFIC PURPOSE OF ANALYZING AND THIS MATERIAL.THIS MATERIAL REMAINS THE SOLE PROPERTY OF THE COMPANY AND THE COMPANY RESERVES THE RIGHT TO REQUIRE ITS RETURN AT ANY TIME."

NATIONAL DEVELOPMENT

Vanasse Hangen Brustlin, Inc.
Transportation
Land Development
Environmental Services
Union Station, Suite 219
2 Washington Square
Worcester, Massachusetts 01604
508.752.1001 • FAX 508.752.1276

REVISIONS

1.	RESPONSE TO CONSERVATION COMMISSION COMMENTS	4–15–2014	
2.	PERMITTING COORDINATION	5–1–2014	CCL

MASSACHUSETTS STEPHEN F. DERDERIAN No. 450 REGISTERED LANDSCAPE ARCHITECT

PROJECT NAME: LIFE TIME ATHLETIC - FRAMINGHAM	PUBLICATIONS: Issued For Local Approvals	DATE: 02/28/2014	SHEET NO. L-2
SHEET TITLE: Planting Plan	PROJECT ADDRESS: 490 Old Connecticut Path Framingham, MA		APPROVED BY: JWD
			DRAWN BY: BMG
			APPLICATION NUMBER:

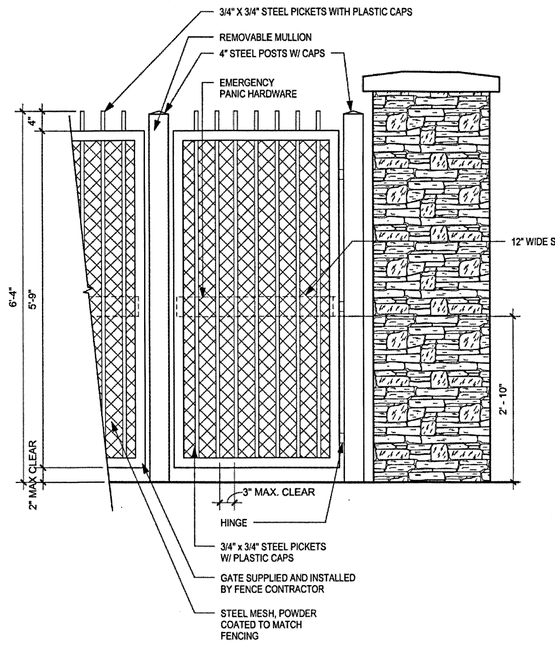

20 ELEVATION AT GATE WITH REMOVABLE MULLION - PROTOTYPICAL
3/4" = 1'-0"

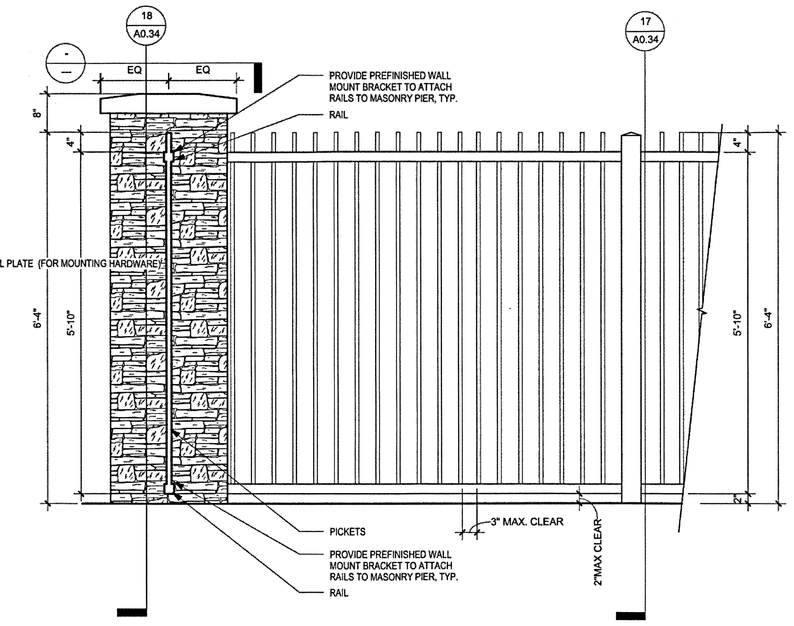

19 ELEVATION AT FENCE - PROTOTYPICAL
3/4" = 1'-0"

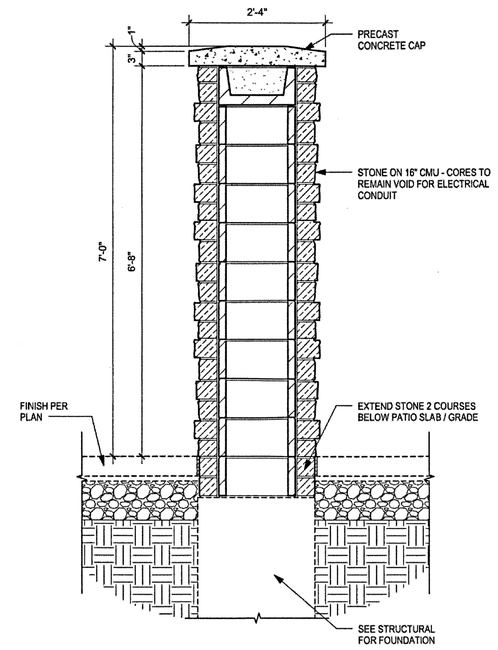

18 SECTION AT STONE PIER - PROTOTYPICAL
3/4" = 1'-0"

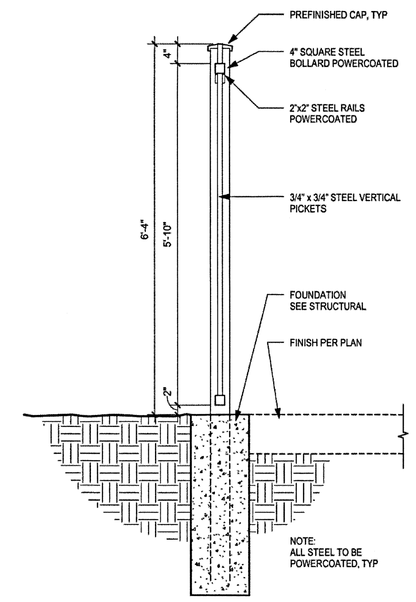

17 SECTION AT STEEL FENCE AT POOL - PROTOTYPICAL
3/4" = 1'-0"

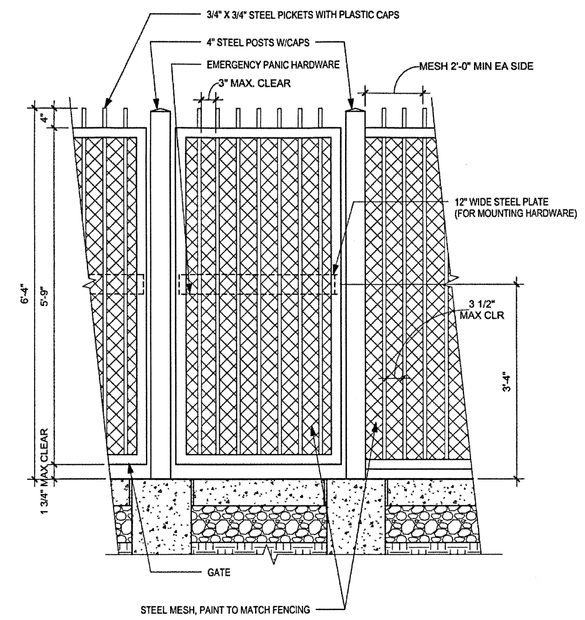

16 ELEVATION AT FENCE GATE - PROTOTYPICAL
3/4" = 1'-0"

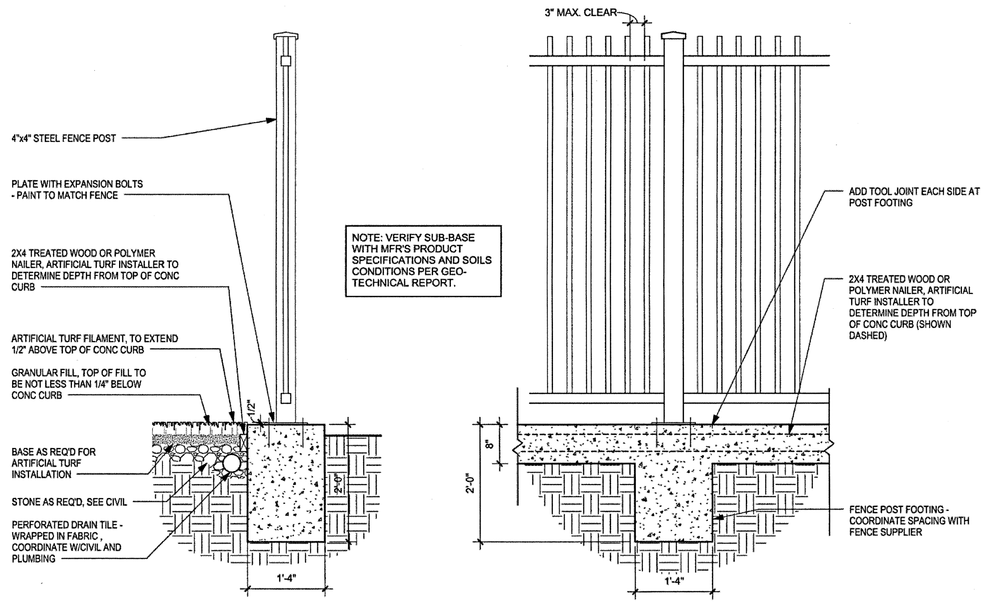

10 SECTION AT PLAY AREA EDGE - PROTOTYPICAL
3/4" = 1'-0"

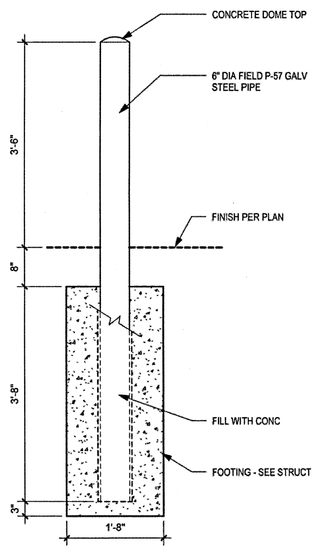

7 BOLLARD DETAIL - PROTOTYPICAL
3/4" = 1'-0"

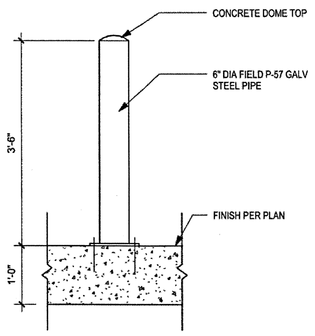

6 BOLLARD DETAIL - PROTOTYPICAL
3/4" = 1'-0"

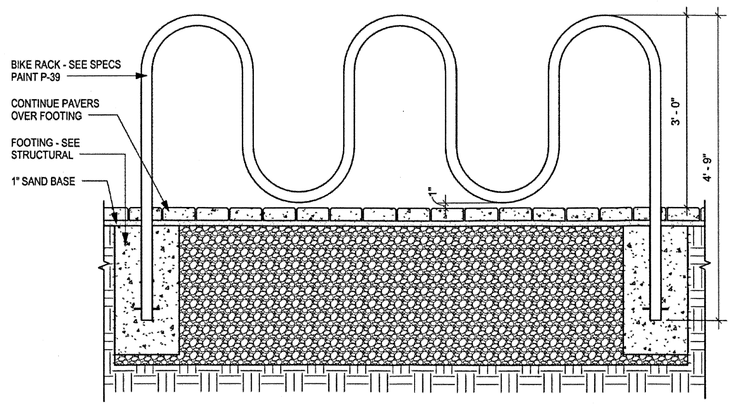

INSTALL 2 BICYCLE RACKS TO ACCOMODATE UP TO 22 BICYCLES TOTAL.
DETAIL PROVIDED FOR INSTALLATION PURPOSES ONLY.

1 BICYCLE RACK DETAIL
3/4" = 1'-0"

NOTE:
DETAILS ON THIS SHEET PROVIDED BY LIFETIME FITNESS.

FRAMINGHAM PLANNING BOARD
DEFINITIVE DEVELOPMENT PLAN APPROVALS

THIS ENDORSEMENT OF THE PLANNING BOARD SHOULD NOT BE CONSTRUED TO BE DETERMINATION OF CONFORMANCE WITH ZONING REGULATIONS.

LIFETIME
THE HEALTHY WAY OF LIFE COMPANY
2902 CORPORATE PLACE
CHANHASSEN, MN 55317

CONFIDENTIALITY NOTICE
"BY ACCEPTING THIS MATERIAL, THE RECIPIENT ACKNOWLEDGES AND AGREES THAT THE INFORMATION CONTAINED HEREIN IS OF A CONFIDENTIAL NATURE AND THAT THE RECIPIENT WILL NOT COPY, DISCLOSE, DISTRIBUTE OR OTHERWISE TRANSMIT IN ANY WAY ANYTHING HEREIN, EITHER IN WHOLE OR IN PART, WITHOUT THE PRIOR WRITTEN PERMISSION OF LIFE TIME FITNESS, INC. OR ITS SUBSIDIARIES (THE "COMPANY"), COMPLETING THE POTENTIAL TRANSACTION CONTEMPLATED BY EXCEPT FOR THE SPECIFIC PURPOSE OF ANALYZING AND THIS MATERIAL.THIS MATERIAL REMAINS THE SOLE PROPERTY OF THE COMPANY AND THE COMPANY RESERVES THE RIGHT TO REQUIRE ITS RETURN AT ANY TIME."

NATIONAL DEVELOPMENT

Vanasse Hangen Brustlin, Inc.
Transportation
Land Development
Environmental Services
Union Station, Suite 219
2 Washington Square
Worcester, Massachusetts 01604
508.752.1001 • FAX 508.752.1276

REVISIONS			
1.	PERMITTING COORDINATION	5-1-2014	CCL

PROJECT NAME: LIFE TIME ATHLETIC - FRAMINGHAM	PUBLICATIONS: Issued For Local Approvals	DATE: 02/28/2014	SHEET NO.: L-3
SHEET TITLE: Site Details	PROJECT ADDRESS: 490 Old Connecticut Path Framingham, MA		APPROVED BY: JWD
			DRAWN BY: BMG
			APPLICATION NUMBER:

General Notes

1) THE PROPERTY LINES SHOWN ON THIS PLAN ARE BASED UPON AN ACTUAL FIELD SURVEY CONDUCTED BY VANASSE HANGEN BRUSTLIN, INC. IN JULY 2009 AND FROM DEEDS AND PLANS OF RECORD.

2) THE EXISTING CONDITIONS SHOWN ON THIS PLAN ARE BASED UPON AN ACTUAL ON-THE-GROUND INSTRUMENT SURVEY PERFORMED BY VANASSE HANGEN BRUSTLIN, INC. IN JULY 2009 AND UPDATED IN OCTOBER 2013.

3) THE LOCATIONS OF EXISTING UNDERGROUND UTILITIES SHOWN ON THIS PLAN ARE BASED ON FIELD OBSERVATIONS AND INFORMATION OF RECORD. THEY ARE NOT WARRANTED TO BE EXACTLY LOCATED NOR IS IT WARRANTED THAT ALL UNDERGROUND UTILITIES OR OTHER STRUCTURES ARE SHOWN ON THIS PLAN.

4) HORIZONTAL DATUM IS BASED ON MASS. GRID SYSTEM, NAD 1983. ELEVATIONS SHOWN ON THIS PLAN REFER TO NAVD OF 1988.

5) THE LOT LIES ENTIRELY WITHIN ZONE X (UNSHADED) (AREAS TO BE OUTSIDE THE 0.2% ANNUAL CHANCE FLOODPLAIN) AS SHOWN ON THE FLOOD INSURANCE RATE MAP FOR MIDDLESEX COUNTY, MASSACHUSETTS, MAP NUMBERS 25017C0517E & 25017C0509E, EFFECTIVE DATES JUNE 4, 2010.

6) THE SITE LIES WITHIN THE M (GENERAL MANUFACTURING) DISTRICT AS SHOWN ON TOWN OF FRAMINGHAM, MASSACHUSETTS ONLINE ZONING MAP. DIMENSIONAL REQUIREMENTS FOR THESE ZONES AT THE TIME OF THIS SURVEY ARE:

	M*
MINIMUM LOT AREA	6,000 S.F.
MINIMUM LOT FRONTAGE	50 FEET
MINIMUM FRONT YARD SETBACK**	50 FEET
MINIMUM SIDE YARD SETBACK	15 FEET
MAXIMUM BUILDING HEIGHT	80 FEET
MAXIMUM BUILDING HEIGHT	6 STORIES
MINIMUM LANDSCAPED OPEN SPACE SURFACE RATIO	20%
MAXIMUM BUILDING COVERAGE	N/A
MAXIMUM FLOOR AREA RATIO	0.32

* ANY NON-RESIDENTIAL USE

**WHERE SHOWN AS "30 OR MORE" THE MINIMUM FRONT SETBACK SHALL BE 30 FEET FROM THE SIDELINE OF A STREET OVER 40 FEET IN WIDTH, AND 50 FEET FROM THE CENTER LINE OF A STREET 40 FEET OR LESS IN WIDTH.

7) THE TREE SYMBOL OUTLINE SHOWN ON THIS PLAN DOES NOT REPRESENT THE ACTUAL TREE CANOPY.

8) THE WETLANDS SHOWN ON THIS PLAN WERE FLAGGED AND GPS'D BY VHB ENVIRONMENTAL DEPARTMENT IN OCTOBER, 2013.

FRAMINGHAM PLANNING BOARD
DEFINITIVE DEVELOPMENT PLAN APPROVALS

THIS ENDORSEMENT OF THE PLANNING BOARD SHOULD NOT BE CONSTRUED TO BE DETERMINATION OF CONFORMANCE WITH ZONING REGULATIONS.

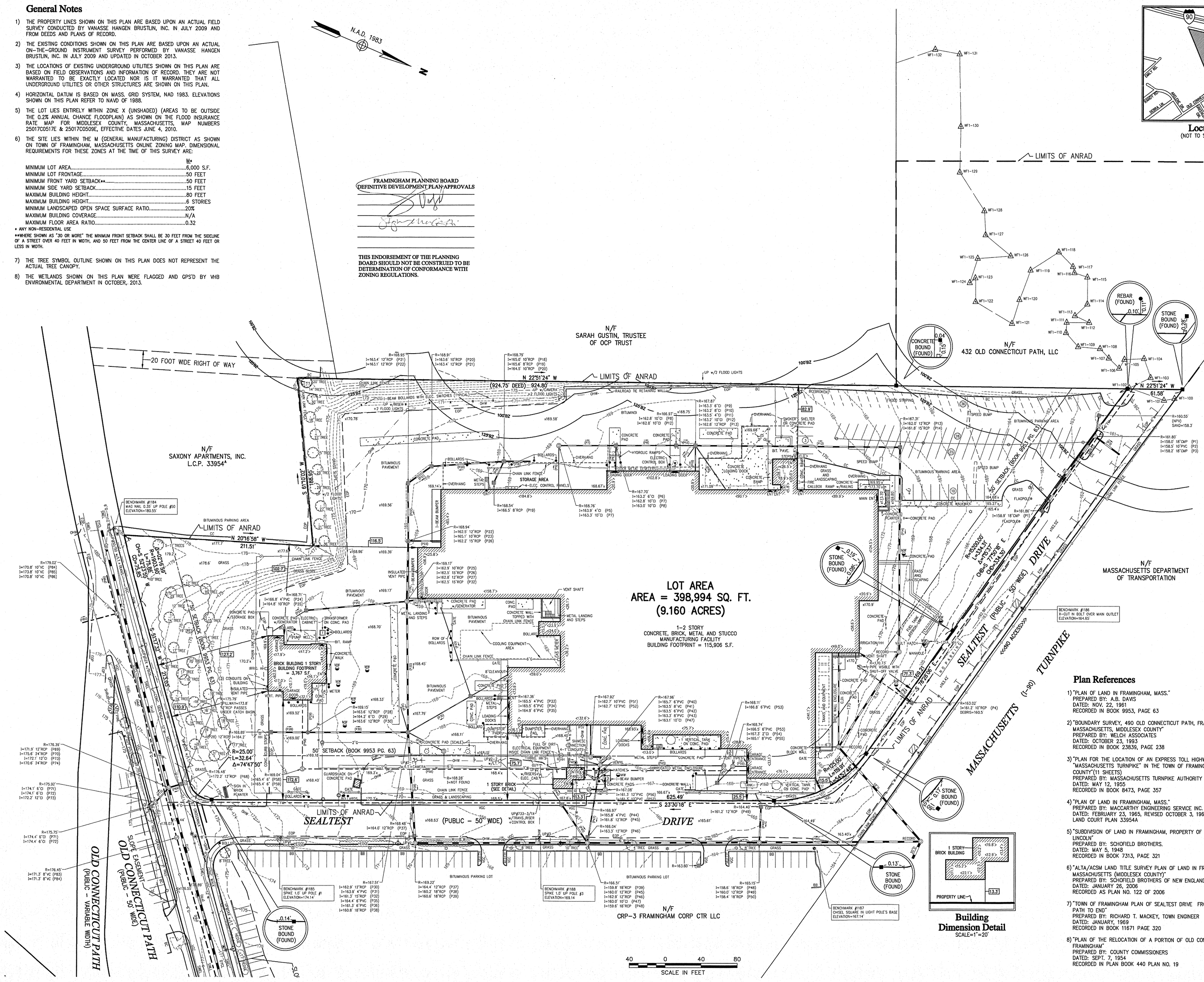

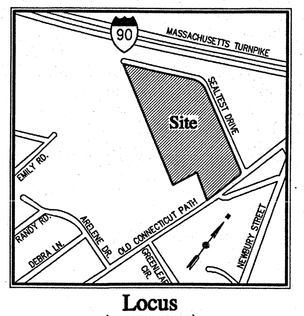

Locus
(NOT TO SCALE)

VHB

Vanasse Hangen Brustlin, Inc.

Transportation
Land Development
Environmental Services

101 Walnut Street, P.O. Box 9151
Watertown, Massachusetts 02471-9151
617 924 1770 • FAX 617 924 2286

Legend

- DRAIN MANHOLE
- CATCH BASIN
- SEWER MANHOLE
- ELECTRIC MANHOLE
- TELEPHONE MANHOLE
- MANHOLE
- HAND HOLE
- WATER GATE
- FIRE HYDRANT
- GAS GATE
- STREET SIGN
- LIGHT POLE
- UTILITY POLE
- GUY POLE
- GUY WIRE
- MONITORING WELL
- F.F.E.=45.27' FINISHED FLOOR ELEVATION
- WELL
- EDGE OF PAVEMENT
- CONCRETE CURB
- VERTICAL GRANITE CURB
- SLOPED GRANITE EDGE
- BITUMINOUS BERM
- BITUMINOUS CURB
- GUARD RAIL
- CHAIN LINK FENCE
- DRAINAGE LINE
- SEWER LINE
- OVERHEAD WIRE
- UNDERGROUND ELECTRIC
- TELEPHONE LINE
- GAS LINE
- WATER LINE
- STONE WALL
- TREE LINE
- 100'BZ 100-FT BUFFER ZONE
- 125'BZ 125-FT BUFFER ZONE
- 200'RA 200-FT RIVER FRONT AREA
- PVP1-100 LIMIT MEAN ORDINARY HIGH WATER
- WT1-100 VEGETATED WETLAND BOUNDARY

Plan References

1) "PLAN OF LAND IN FRAMINGHAM, MASS."
PREPARED BY: A.B. DAVIS
DATED: NOV. 22, 1961
RECORDED IN BOOK 9953, PAGE 63

2) "BOUNDARY SURVEY, 490 OLD CONNECTICUT PATH, FRAMINGHAM, MASSACHUSETTS, MIDDLESEX COUNTY"
PREPARED BY: WELCH ASSOCIATES
DATED: OCTOBER 23, 1993
RECORDED IN BOOK 23839, PAGE 238

3) "PLAN FOR THE LOCATION OF AN EXPRESS TOLL HIGHWAY KNOWN AS "MASSACHUSETTS TURNPIKE" IN THE TOWN OF FRAMINGHAM, MIDDLESEX COUNTY"(11 SHEETS)
PREPARED BY: MASSACHUSETTS TURNPIKE AUTHORITY
DATED: MAY 12, 1955
RECORDED IN BOOK 8473, PAGE 357

4) "PLAN OF LAND IN FRAMINGHAM, MASS."
PREPARED BY: MACCARTHY ENGINEERING SERVICE INC.
DATED: FEBRUARY 23, 1965, REVISED OCTOBER 3, 1968
LAND COURT PLAN 33954A

5) "SUBDIVISION OF LAND IN FRAMINGHAM, PROPERTY OF ESTATE OF WILLIAM I. LINCOLN"
PREPARED BY: SCHOFIELD BROTHERS.
DATED: MAY 5, 1948
RECORDED IN BOOK 7313, PAGE 321

6) "ALTA/ACSM LAND TITLE SURVEY PLAN OF LAND IN FRAMINGHAM, MASSACHUSETTS (MIDDLESEX COUNTY)"
PREPARED BY: SCHOFIELD BROTHERS OF NEW ENGLAND, INC.
DATED: JANUARY 26, 2006
RECORDED AS PLAN NO. 122 OF 2006

7) "TOWN OF FRAMINGHAM PLAN OF SEALTEST DRIVE FROM OLD CONNECTICUT PATH TO END"
PREPARED BY: RICHARD T. MACKEY, TOWN ENGINEER
DATED: JANUARY, 1969
RECORDED IN BOOK 11671 PAGE 320

8) "PLAN OF THE RELOCATION OF A PORTION OF OLD CONNECTICUT PATH, FRAMINGHAM"
PREPARED BY: COUNTY COMMISSIONERS
DATED: SEPT. 7, 1954
RECORDED IN PLAN BOOK 440 PLAN NO. 19

Building Dimension Detail
SCALE=1"=20'

No.	Revision	Date	Appvd.
1	WETLANDS & LIMIT OF ANRAD UPDATED	2/3/14	CDKR

Designed by | Drawn by | Checked by
CAD checked by | Approved by
Scale 1"=40' | Date November 6, 2013

Project Title
490 Old Connecticut Path

Framingham, Massachusetts
Issued for
For Local Approvals

Drawing Title
Existing Conditions Plan of Land

COMMONWEALTH OF MASSACHUSETTS
RUSSELL J. BOUSQUET
NO 30389
REGISTERED LAND SURVEYOR
2/24/14

Drawing Number
Sv-1

Sheet 1 of 1

Project Number
12540.00

\\vhb\proj\Worcester\12540.00\cad\sr\planset\12540.00-EX.dwg

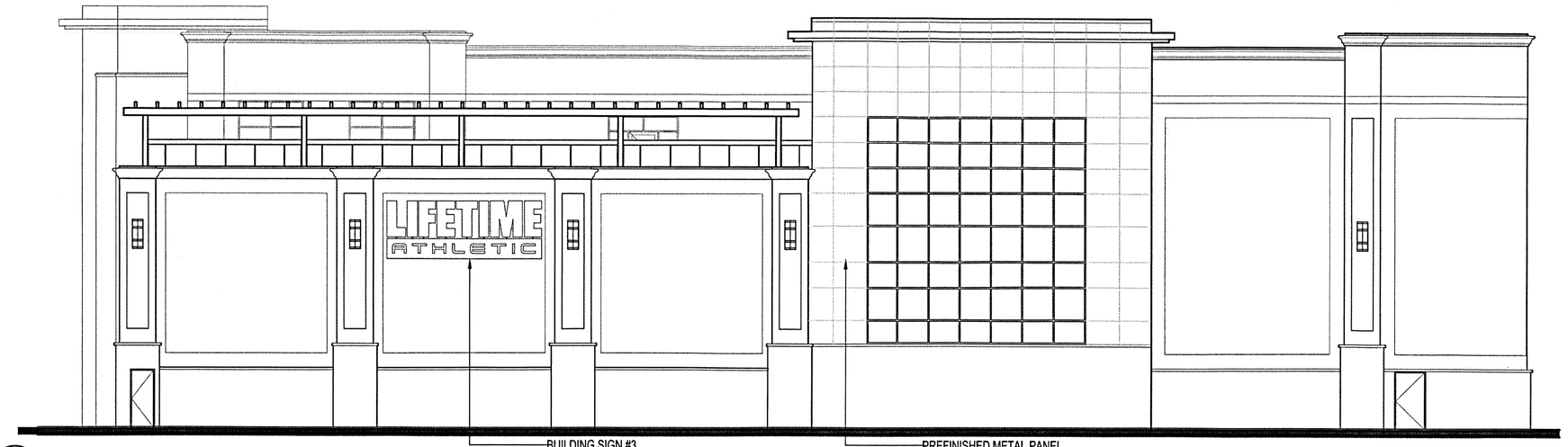

4 SQUASH SIDE ELEVATION

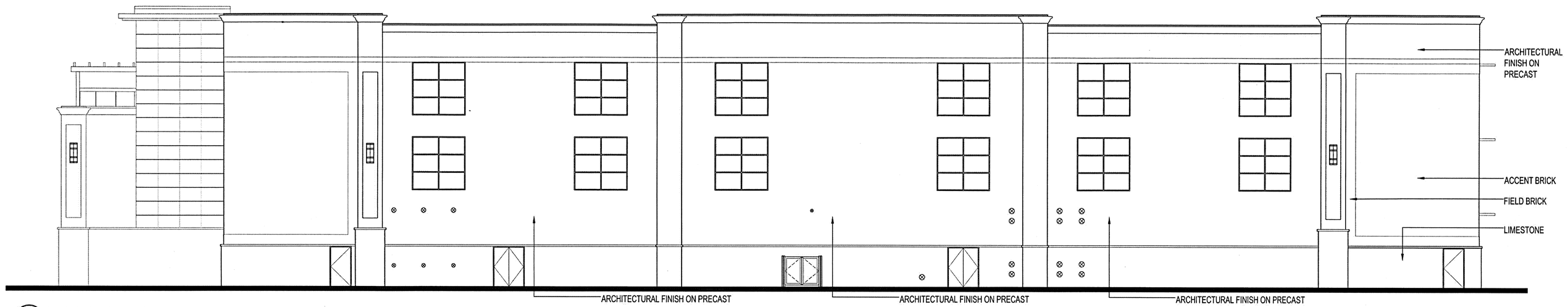

3 BACK ELEVATION
3/32" = 1'-0"

2 POOL SIDE ELEVATION

1 FRONT ELEVATION

REGISTERED ARCHITECT
NO. 121737
CHANHASSEN
MN
COMMONWEALTH OF MASSACHUSETTS

2/4/2014 3:11:21 PM

LIFETIME
THE HEALTHY WAY OF LIFE COMPANY℠
2902 CORPORATE PLACE
CHANHASSEN, MN 55317

CONFIDENTIALITY NOTICE
"BY ACCEPTING THIS MATERIAL, THE RECIPIENT ACKNOWLEDGES AND AGREES THAT THE INFORMATION CONTAINED HEREIN IS OF A CONFIDENTIAL NATURE AND THAT THE RECIPIENT WILL NOT COPY, DISCLOSE, DISTRIBUTE OR OTHERWISE TRANSMIT IN ANY WAY ANYTHING HEREIN, EITHER IN WHOLE OR IN PART, WITHOUT THE PRIOR WRITTEN PERMISSION OF LIFE TIME FITNESS, INC. OR ITS SUBSIDIARIES (THE "COMPANY"), COMPLETING THE POTENTIAL TRANSACTION CONTEMPLATED BY EXCEPT FOR THE SPECIFIC PURPOSE OF ANALYZING AND THIS MATERIAL.THIS MATERIAL REMAINS THE SOLE PROPERTY OF THE COMPANY AND THE COMPANY RESERVES THE RIGHT TO REQUIRE ITS RETURN AT ANY TIME."

LIFETIME
ARCHITECTURE | DESIGN™

CONSULTANT

REVISIONS

PROJECT NAME
LIFE TIME ATHLECTIC - FRAMINGHAM

SHEET TITLE
BUILDING ELEVATIONS

PUBLICATIONS
Issued For Local Approvals

PROJECT ADDRESS
490 Old Connecticut Path
Framingham, MA

DATE
02/28/2014

SHEET NO.
A-1

APPROVED BY:

DRAWN BY:

APPLICATION NUMBER:

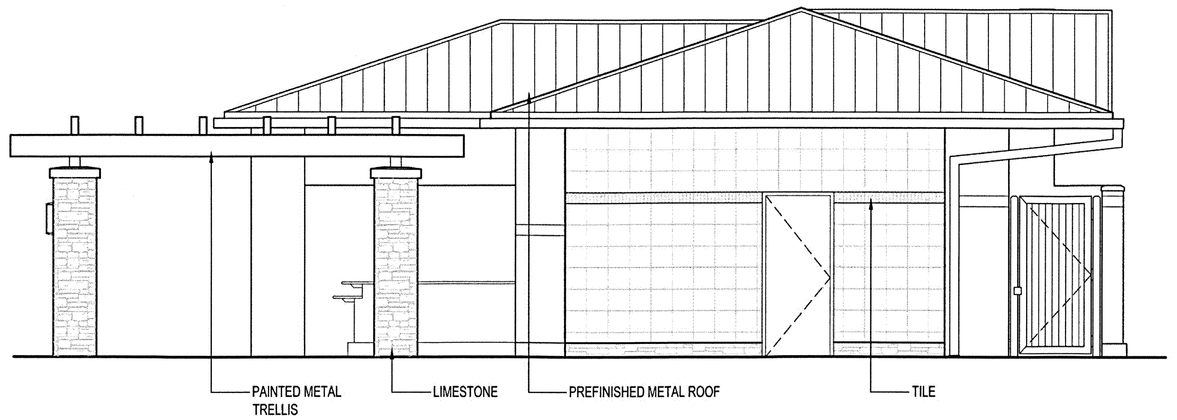

4 SIDE ELEVATION

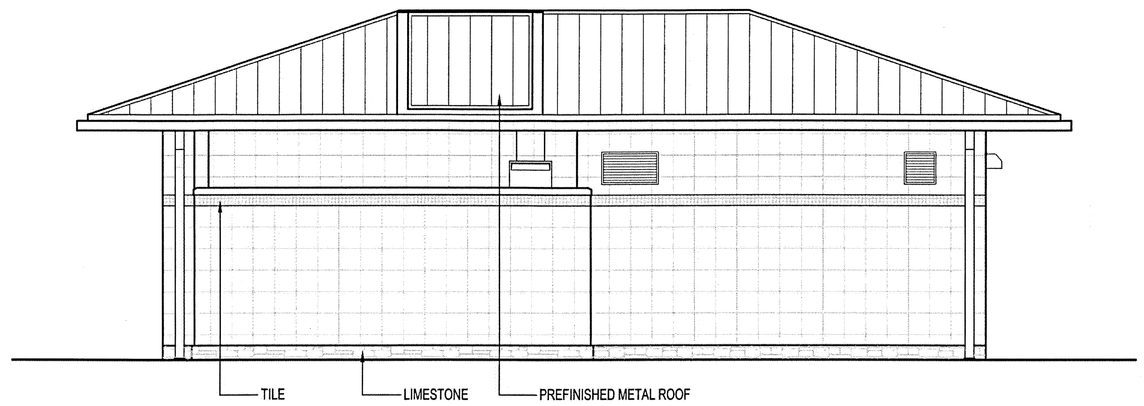

3 BACK ELEVATION

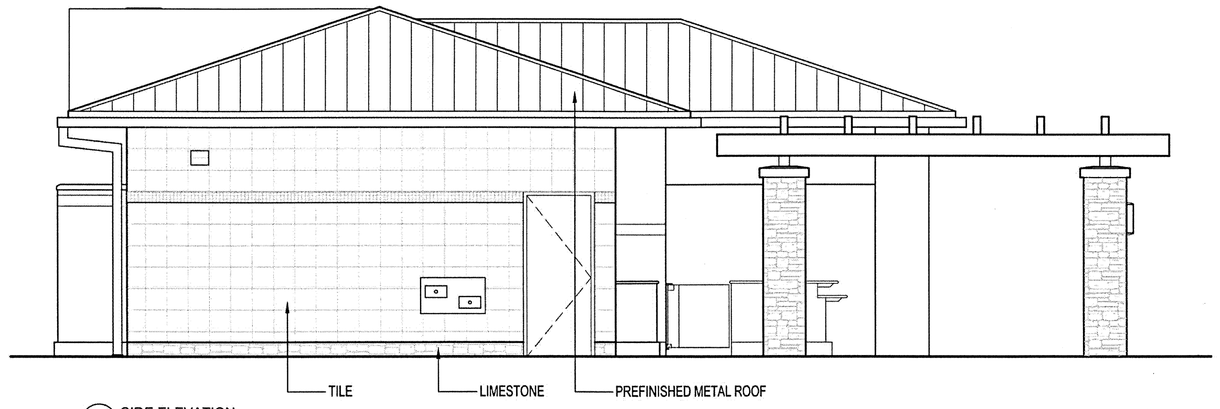

2 SIDE ELEVATION

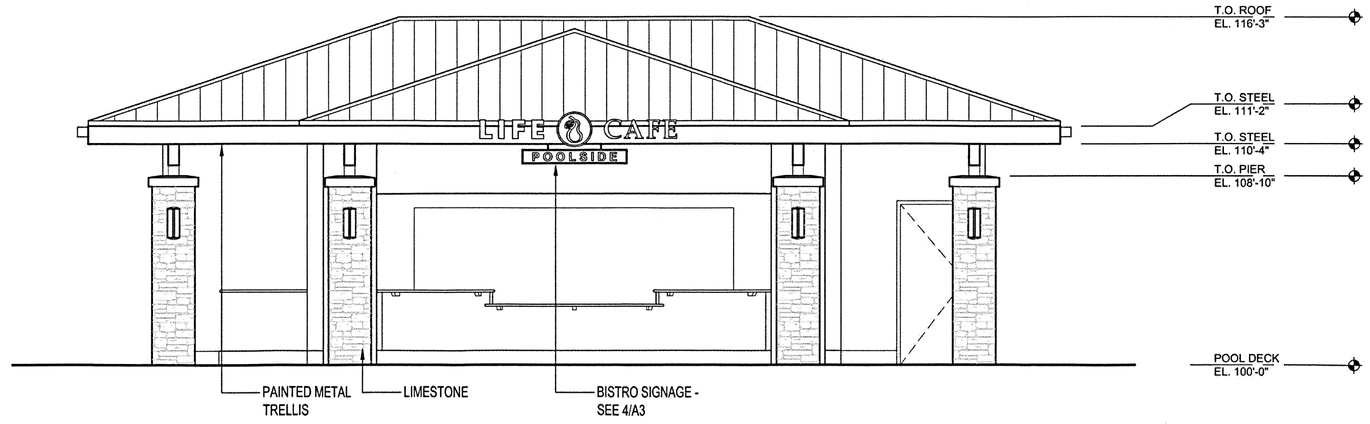

1 FRONT ELEVATION

FRAMINGHAM PLANNING BOARD
DEFINITIVE DEVELOPMENT PLAN APPROVALS

THIS ENDORSEMENT OF THE PLANNING BOARD SHOULD NOT BE CONSTRUED TO BE DETERMINATION OF CONFORMANCE WITH ZONING REGULATIONS.

REGISTERED ARCHITECT
MATTHEW J. RIBBA
NO. 31737
CHANHASSEN
MN
COMMONWEALTH OF MASSACHUSETTS

2/4/2014 3:11:21 PM

LIFETIME
THE HEALTHY WAY OF LIFE COMPANY℠
2902 CORPORATE PLACE
CHANHASSEN, MN 55317

CONFIDENTIALITY NOTICE
"BY ACCEPTING THIS MATERIAL, THE RECIPIENT ACKNOWLEDGES AND AGREES THAT THE INFORMATION CONTAINED HEREIN IS OF A CONFIDENTIAL NATURE AND THAT THE RECIPIENT WILL NOT COPY, DISCLOSE, DISTRIBUTE OR OTHERWISE TRANSMIT IN ANY WAY ANYTHING HEREIN, EITHER IN WHOLE OR IN PART, WITHOUT THE PRIOR WRITTEN PERMISSION OF LIFE TIME FITNESS, INC. OR ITS SUBSIDIARIES (THE "COMPANY"), COMPLETING THE POTENTIAL TRANSACTION CONTEMPLATED BY EXCEPT FOR THE SPECIFIC PURPOSE OF ANALYZING AND THIS MATERIAL.THIS MATERIAL REMAINS THE SOLE PROPERTY OF THE COMPANY AND THE COMPANY RESERVES THE RIGHT TO REQUIRE ITS RETURN AT ANY TIME."

LIFETIME
ARCHITECTURE | DESIGN™

CONSULTANT

REVISIONS

PROJECT NAME: LIFE TIME ATHLECTIC - FRAMINGHAM	PUBLICATIONS: Issued For Local Approvals	DATE: 02/28/2014	SHEET NO. A2
SHEET TITLE: BISTRO ELEVATIONS	PROJECT ADDRESS: 490 Old Connecticut Path Framingham, MA		APPROVED BY:
			DRAWN BY:
			APPLICATION NUMBER:

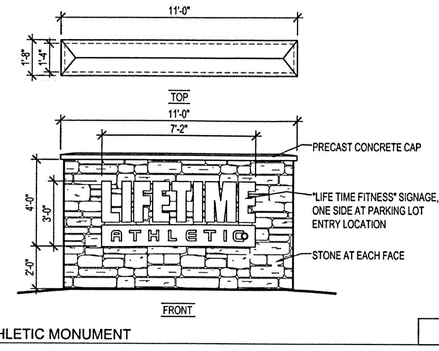

D LIFETIME ATHLETIC MONUMENT
1/4" = 1'-0"

1. ALL LETTERS TO BE 2" DEEP REVERSE CHANNEL
2. ALL SPECIFIED FINISHES TO RETURN ON SIDES OF LETTER AND CABINET

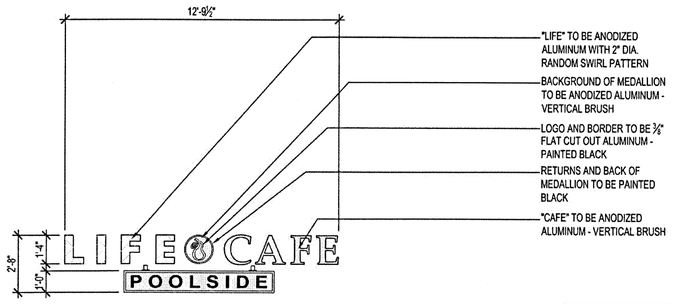

4 LIFE CAFE POOLSIDE BISTRO CANOPY SIGN
1/4" = 1'-0"
26 SQUARE FEET

1. ALL LETTERS TO BE 3" DEEP REVERSE CHANNEL MOUNTED 2" FROM FACE OF WALL
2. ALL LETTERS AND CABINET TO BE INTERNALLY ILLUMINATED WITH WITH L.E.D. "HALO" LIGHTING
3. ALL SPECIFIED FINISHES TO RETURN ON SIDES OF LETTER AND CABINET

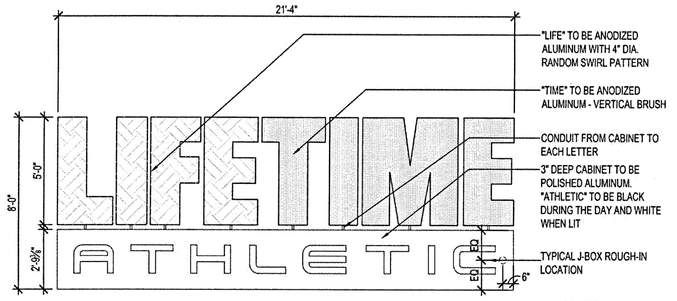

3 LIFETIME ATHLETIC SIGN - SQUASH SIDE ELEVATION
1/4" = 1'-0"
171 SQUARE FEET

1. ALL LETTERS TO BE 3" DEEP REVERSE CHANNEL MOUNTED 2" FROM FACE OF WALL
2. ALL LETTERS AND CABINET TO BE INTERNALLY ILLUMINATED WITH WITH L.E.D. "HALO" LIGHTING
3. ALL SPECIFIED FINISHES TO RETURN ON SIDES OF LETTER AND CABINET

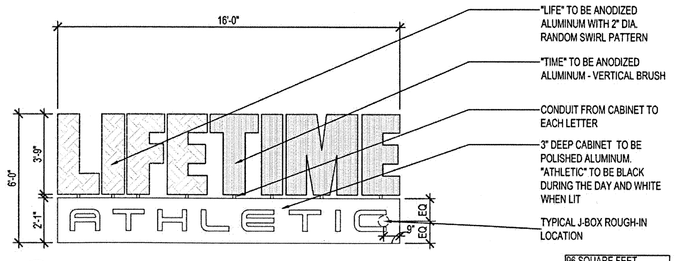

2 LIFETIME ATHLETIC SIGN - POOL SIDE ELEVATION
1/4" = 1'-0"
98 SQUARE FEET

1. ALL LETTERS TO BE 3" DEEP REVERSE CHANNEL MOUNTED 2" FROM FACE OF WALL
2. ALL LETTERS AND CABINET TO BE INTERNALLY ILLUMINATED WITH WITH L.E.D. "HALO" LIGHTING
3. ALL SPECIFIED FINISHES TO RETURN ON SIDES OF LETTER AND CABINET

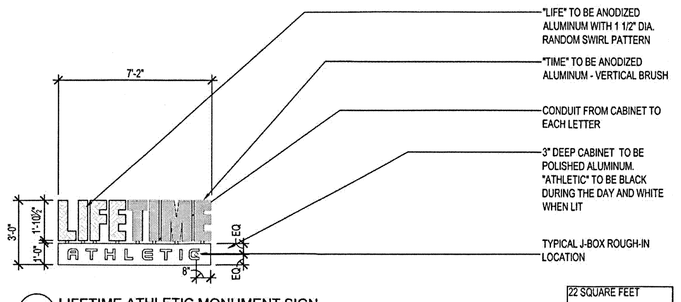

D LIFETIME ATHLETIC MONUMENT SIGN
1/4" = 1'-0"
22 SQUARE FEET

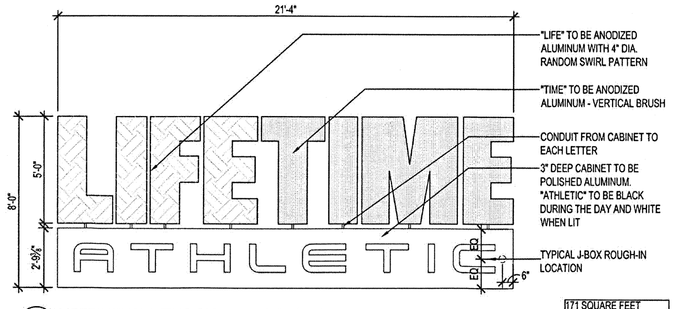

1 LIFETIME ATHLETIC SIGN - FRONT ELEVATION
1/4" = 1'-0"
171 SQUARE FEET

REGISTERED ARCHITECT
NATHAN J. ROE
No. 121737
CHANHASSEN
MN
COMMONWEALTH OF MASSACHUSETTS

2/4/2014 3:11:21 PM

LIFETIME
THE HEALTHY WAY OF LIFE COMPANY℠
2902 CORPORATE PLACE
CHANHASSEN, MN 55317

CONFIDENTIALITY NOTICE
"BY ACCEPTING THIS MATERIAL, THE RECIPIENT ACKNOWLEDGES AND AGREES THAT THE INFORMATION CONTAINED HEREIN IS OF A CONFIDENTIAL NATURE AND THAT THE RECIPIENT WILL NOT COPY, DISCLOSE, DISTRIBUTE OR OTHERWISE TRANSMIT IN ANY WAY ANYTHING HEREIN, EITHER IN WHOLE OR IN PART, WITHOUT THE PRIOR WRITTEN PERMISSION OF LIFE TIME FITNESS, INC. OR ITS SUBSIDIARIES (THE "COMPANY"), COMPLETING THE POTENTIAL TRANSACTION CONTEMPLATED BY EXCEPT FOR THE SPECIFIC PURPOSE OF ANALYZING AND THIS MATERIAL.THIS MATERIAL REMAINS THE SOLE PROPERTY OF THE COMPANY AND THE COMPANY RESERVES THE RIGHT TO REQUIRE ITS RETURN AT ANY TIME."

LIFETIME
ARCHITECTURE | DESIGN™

CONSULTANT

REVISIONS

PROJECT NAME	PUBLICATIONS	DATE	SHEET NO.
LIFE TIME ATHLECTIC - FRAMINGHAM	Issued For Local Approvals	02/28/2014	A-3
SHEET TITLE: BUILDING SIGNAGE DETAILS	PROJECT ADDRESS: 490 Old Connecticut Path Framingham, MA		APPROVED BY:
			DRAWN BY:
			APPLICATION NUMBER:

LIFE TIME FITNESS FIXTURE SCHEDULE

TYPE	DESCRIPTION	VOLT	LAMPS #	LAMPS TYPE	WATTAGE	MANUFACTURER	CATALOG NUMBER	NOTES
PX	EXTERIOR LIGHT POLE AND HEADS, DIE-CAST ALUMINUM FIXTURE HOUSING, ACRYLIC LENS. 4" STRAIGHT SQUARE STEEL POLE WITH BASE COVER. FIXTURE AND POLE TO BE DARK BRONZE IN COLOR. SINGLE HEAD, 19'-8" POLE, TYPE 4 MEDIUM DISTRIBUTION, 80 LED CLUSTER, 530mA DRIVE CURRENT, HOUSE-SIDE SHIELD.	480	N/A	LED 4000K COLOR TEMP	142	LITHONIA POLE	DSX2 LED-80C-530-40K-T4M-480-SPA-HS-DDBXD SSS 20 4G-DDB-SBC4	1
P1	EXTERIOR LIGHT POLE AND HEADS, DIE-CAST ALUMINUM FIXTURE HOUSING, ACRYLIC LENS. 4" STRAIGHT SQUARE STEEL POLE WITH BASE COVER. FIXTURE AND POLE TO BE DARK BRONZE IN COLOR. SINGLE HEAD, 24'-8" POLE, TYPE 4 MEDIUM DISTRIBUTION, 80 LED CLUSTER, 530mA DRIVE CURRENT.	480	N/A	LED 4000K COLOR TEMP	142	LITHONIA POLE	DSX2 LED-80C-530-40K-T4M-480-SPA-DDBXD SSS 25 4G-DDB-SBC4	1
P2	EXTERIOR LIGHT POLE AND HEADS, DIE-CAST ALUMINUM FIXTURE HOUSING, ACRYLIC LENS. 4" STRAIGHT SQUARE STEEL POLE WITH BASE COVER. FIXTURE AND POLE TO BE DARK BRONZE IN COLOR. DOUBLE HEAD, 24'-8" POLE, TYPE 4 MEDIUM DISTRIBUTION, 80 LED CLUSTER, 530mA DRIVE CURRENT.	480	N/A	LED 4000K COLOR TEMP	284	LITHONIA POLE	(2) DSX2 LED-80C-530-40K-T4M-480-SPA-DDBXD SSS 25 4G-DDB-SBC4	1
P2H	EXTERIOR LIGHT POLE AND HEADS, DIE-CAST ALUMINUM FIXTURE HOUSING, ACRYLIC LENS. 4" STRAIGHT SQUARE STEEL POLE WITH BASE COVER. FIXTURE AND POLE TO BE DARK BRONZE IN COLOR. DOUBLE HEAD, 23'-0" OR 24'-8" POLE, TYPE 4 MEDIUM DISTRIBUTION, 80 LED CLUSTER, 700mA DRIVE CURRENT.	480	N/A	LED 4000K COLOR TEMP	376	LITHONIA POLE	(2) DSX2 LED-80C-700-40K-T4M-480-SPA-DDBXD SSS 25 4G-DDB-SBC4	1
P3	EXTERIOR LIGHT POLE AND HEADS, DIE-CAST ALUMINUM FIXTURE HOUSING, ACRYLIC LENS. 4" STRAIGHT SQUARE STEEL POLE WITH BASE COVER. FIXTURE AND POLE TO BE DARK BRONZE IN COLOR. SINGLE HEAD, 24'-8" POLE, TYPE 2 MEDIUM DISTRIBUTION, 80 LED CLUSTER, 530mA DRIVE CURRENT, HOUSE-SIDE SHIELD.	480	N/A	LED 4000K COLOR TEMP	142	LITHONIA POLE	DSX2 LED-80C-530-40K-T2M-480-SPA-HS-DDBXD SSS 25 4G-DDB-SBC4	1
P4H	EXTERIOR LIGHT POLE AND HEADS, DIE-CAST ALUMINUM FIXTURE HOUSING, ACRYLIC LENS. 4" STRAIGHT SQUARE STEEL POLE WITH BASE COVER. FIXTURE AND POLE TO BE DARK BRONZE IN COLOR. SINGLE HEAD, 24'-8" POLE, FORWARD THROW MEDIUM DISTRIBUTION, 80 LED CLUSTER, 700mA DRIVE CURRENT, HOUSE-SIDE SHIELD.	480	N/A	LED 4000K COLOR TEMP	188	LITHONIA POLE	DSX2 LED-80C-700-40K-TFTM-480-SPA-HS-DDBXD SSS 25 4G-DDB-SBC4	1
P5X	EXTERIOR LIGHT POLE AND HEADS, DIE-CAST ALUMINUM FIXTURE HOUSING, ACRYLIC LENS. 4" STRAIGHT SQUARE STEEL POLE WITH BASE COVER. FIXTURE AND POLE TO BE DARK BRONZE IN COLOR. SINGLE HEAD, 19'-8" POLE, FORWARD THROW MEDIUM DISTRIBUTION, 60 LED CLUSTER, 700mA DRIVE CURRENT, HOUSE-SIDE SHIELD, 2' MAST ARM.	480	N/A	LED 4000K COLOR TEMP	131	LITHONIA POLE MAST ARM	DSX1 LED-60C-700-40K-TFTM-480-MA-HS-DDBXD SSS 20 4G-DDB-SBC4 2' ARCHITECTURAL	1
P6X	EXTERIOR LIGHT POLE AND HEADS, DIE-CAST ALUMINUM FIXTURE HOUSING, ACRYLIC LENS. 4" STRAIGHT SQUARE STEEL POLE WITH BASE COVER. FIXTURE AND POLE TO BE DARK BRONZE IN COLOR. SINGLE HEAD, 19'-8" POLE, TYPE 3 MEDIUM DISTRIBUTION, 60 LED CLUSTER, 700mA DRIVE CURRENT, HOUSE-SIDE SHIELD, 2' MAST ARM.	480	N/A	LED 4000K COLOR TEMP	131	LITHONIA POLE MAST ARM	DSX1 LED-60C-700-40K-T3M-480-MA-HS-DDBXD SSS 20 4G-DDB-SBC4 2' ARCHITECTURAL	1
Q4	LED EXTERIOR WALL MOUNT AREA LIGHT. DARK BRONZE IN COLOR. TYPE 3 DISTRIBUTION.	277	N/A	LED 3000K COLOR TEMP	58	LITHONIA	ASW1-LED1-49B350/30K-SR3-MVOLT-DDBXD	
R6	LED DECORATIVE BOLLARD. BLACK HOUSING FINISH. PROVIDE WITH HOUSESIDE SHIELD.	277	N/A	LED 3500K COLOR TEMP	38	KIM LIGHTING	BNB1-36L3KUV-BL-HS	

NOTES:
1. COORDINATE POLE HEIGHT AND CONCRETE BASE. REFER TO DETAILS 2/E0.2 AND 3/E0.2.

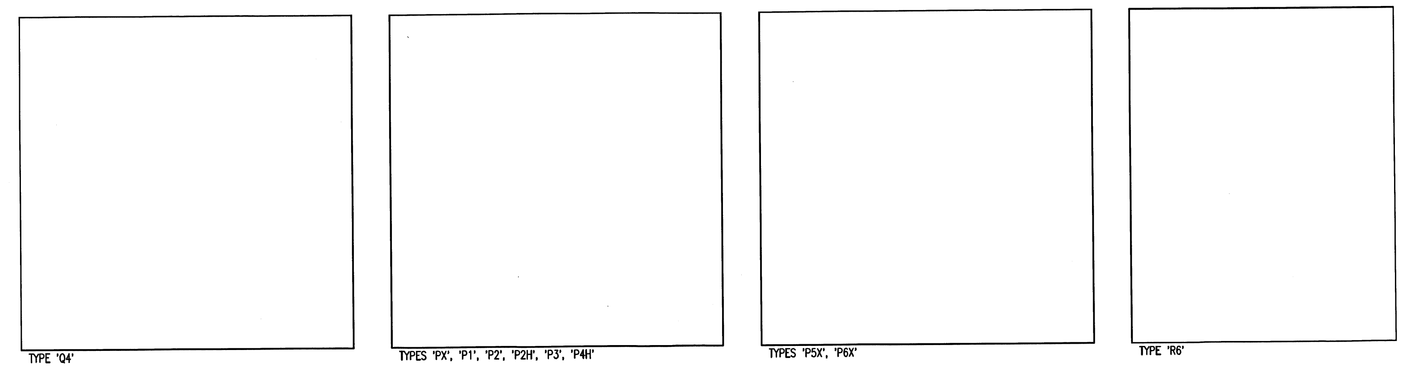

4 PROPOSED FIXTURE IMAGES
NO SCALE

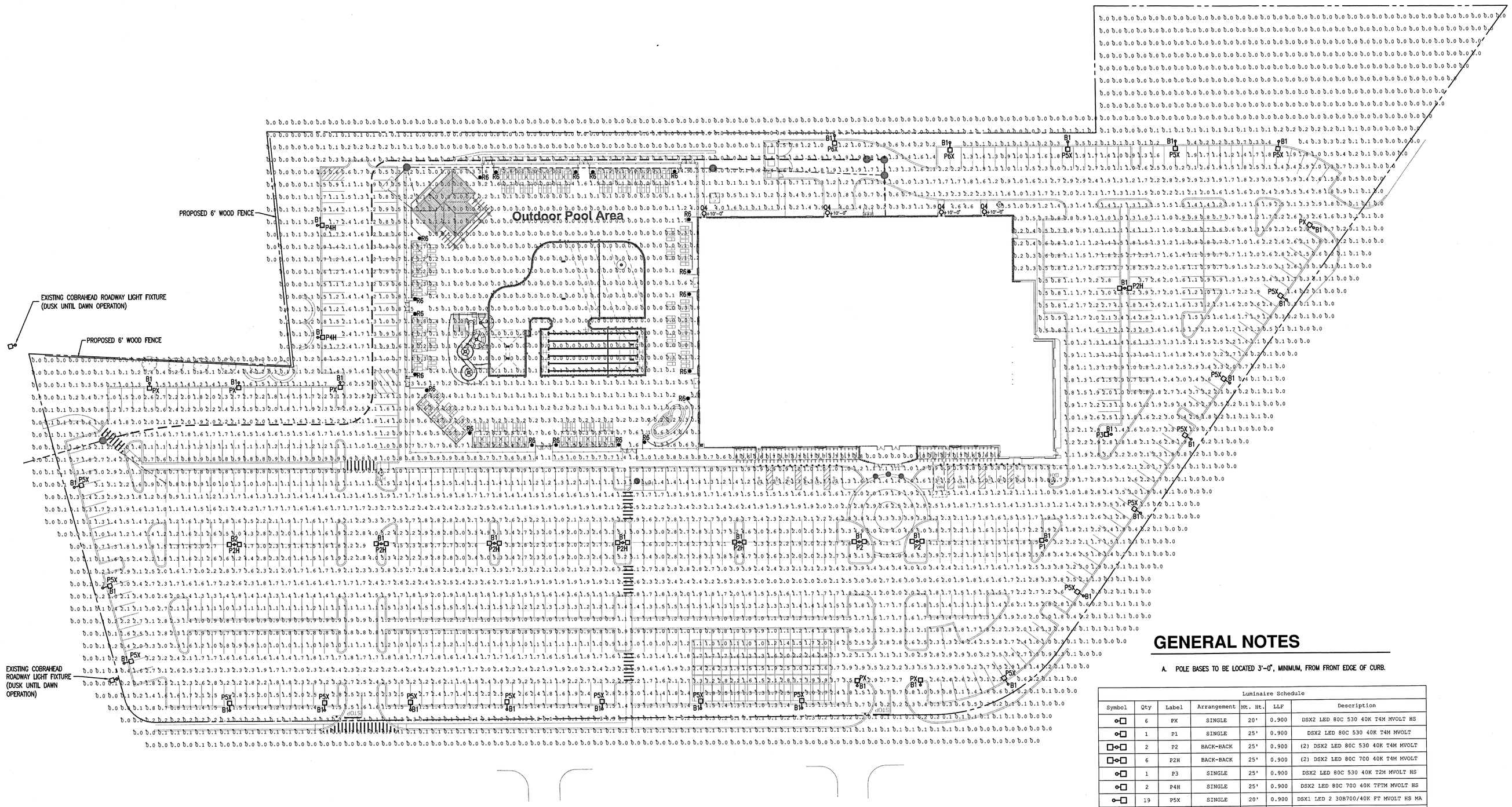

1 PHOTOMETRIC SITE PLAN
1"=40'-0"

GENERAL NOTES

A. POLE BASES TO BE LOCATED 3'-0", MINIMUM, FROM FRONT EDGE OF CURB.

Luminaire Schedule

Symbol	Qty	Label	Arrangement	Mt. Ht.	LLF	Description
	6	PX	SINGLE	20'	0.900	DSX2 LED 80C 530 40K T4M MVOLT HS
	1	P1	SINGLE	25'	0.900	DSX2 LED 80C 530 40K T4M MVOLT
	2	P2	BACK-BACK	25'	0.900	(2) DSX2 LED 80C 530 40K T4M MVOLT
	6	P2H	BACK-BACK	25'	0.900	(2) DSX2 LED 80C 700 40K T4M MVOLT
	1	P3	SINGLE	25'	0.900	DSX2 LED 80C 530 40K T2M MVOLT HS
	2	P4H	SINGLE	25'	0.900	DSX2 LED 80C 700 40K TFTM MVOLT HS
	19	P5X	SINGLE	20'	0.900	DSX1 LED 2 30B700/40K FT MVOLT HS MA
	2	P6X	SINGLE	20'	0.900	DSX1 LED 2 30B700/40K SR3 MVOLT HS MA
	4	Q4	SINGLE	10'	0.900	ASW1-LED1-49B350/30K-SR3
	20	R6	SINGLE	3.5'	0.900	BNB-36LED-3500K

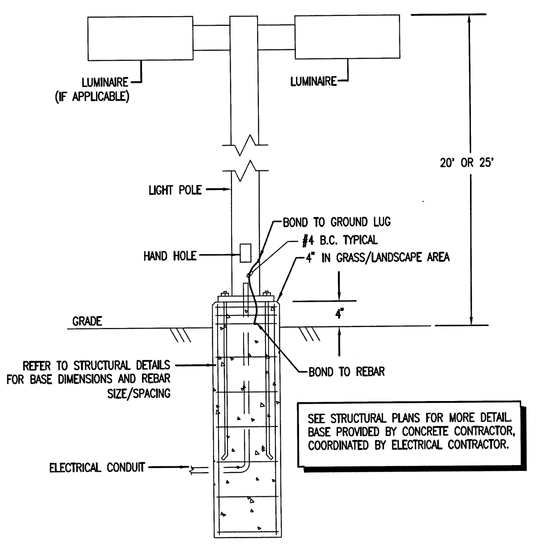

2 POLE BASE DETAIL - TYPE 'B1'
NO SCALE

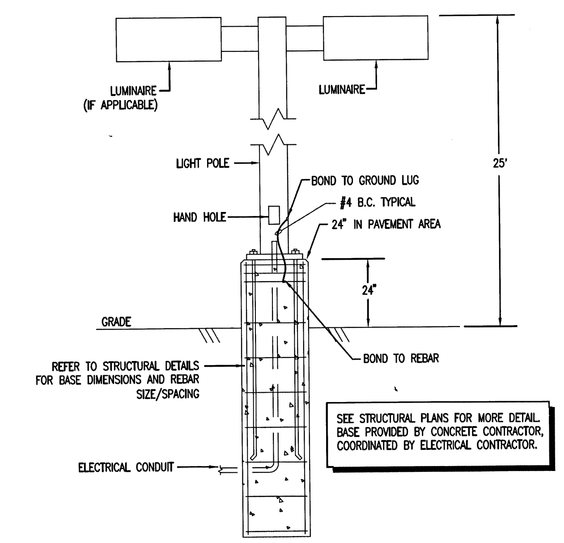

3 POLE BASE DETAIL - TYPE 'B2'
NO SCALE

LIFETIME
THE HEALTHY WAY OF LIFE COMPANY
2902 CORPORATE PLACE
CHANHASSEN, MN 55317

CONFIDENTIALITY NOTICE
"BY ACCEPTING THIS MATERIAL, THE RECIPIENT ACKNOWLEDGES AND AGREES THAT THE INFORMATION CONTAINED HEREIN IS OF A CONFIDENTIAL NATURE AND THAT THE RECIPIENT WILL NOT COPY, DISCLOSE, DISTRIBUTE OR OTHERWISE TRANSMIT IN ANY WAY ANYTHING HEREIN, EITHER IN WHOLE OR IN PART, WITHOUT THE PRIOR WRITTEN PERMISSION OF LIFE TIME FITNESS, INC. OR ITS SUBSIDIARIES (THE "COMPANY"), COMPLETING THE POTENTIAL TRANSACTION CONTEMPLATED BY EXCEPT FOR THE SPECIFIC PURPOSE OF ANALYZING AND THIS MATERIAL. THIS MATERIAL REMAINS THE SOLE PROPERTY OF THE COMPANY AND THE COMPANY RESERVES THE RIGHT TO REQUIRE ITS RETURN AT ANY TIME."

LIFETIME
ARCHITECTURE | DESIGN™

CONSULTANT
emanuelson-podas
consulting engineers
10401 Bren Road East
Minnetonka, MN 55343
ph: 952-930-0050
fax: 952-930-0777
www.epinc.net

REVISIONS

COMMONWEALTH OF MASSACHUSETTS
MATTHEW W. MUNN
ELECTRICAL
No. 47738
REGISTERED PROFESSIONAL ENGINEER

PROJECT NAME: FRAMINGHAM, MA	PUBLICATIONS: Issued For Coordination	DATE: 04/28/2014	SHEET NO.: E0.2
SHEET TITLE: PHOTOMETRIC SITE PLAN	PROJECT ADDRESS: 490 OLD CONNECTICUT PATH, FRAMINGHAM, MA 01701		APPROVED BY: MWF DRAWN BY: TJN PERMIT NUMBER: 2409.151