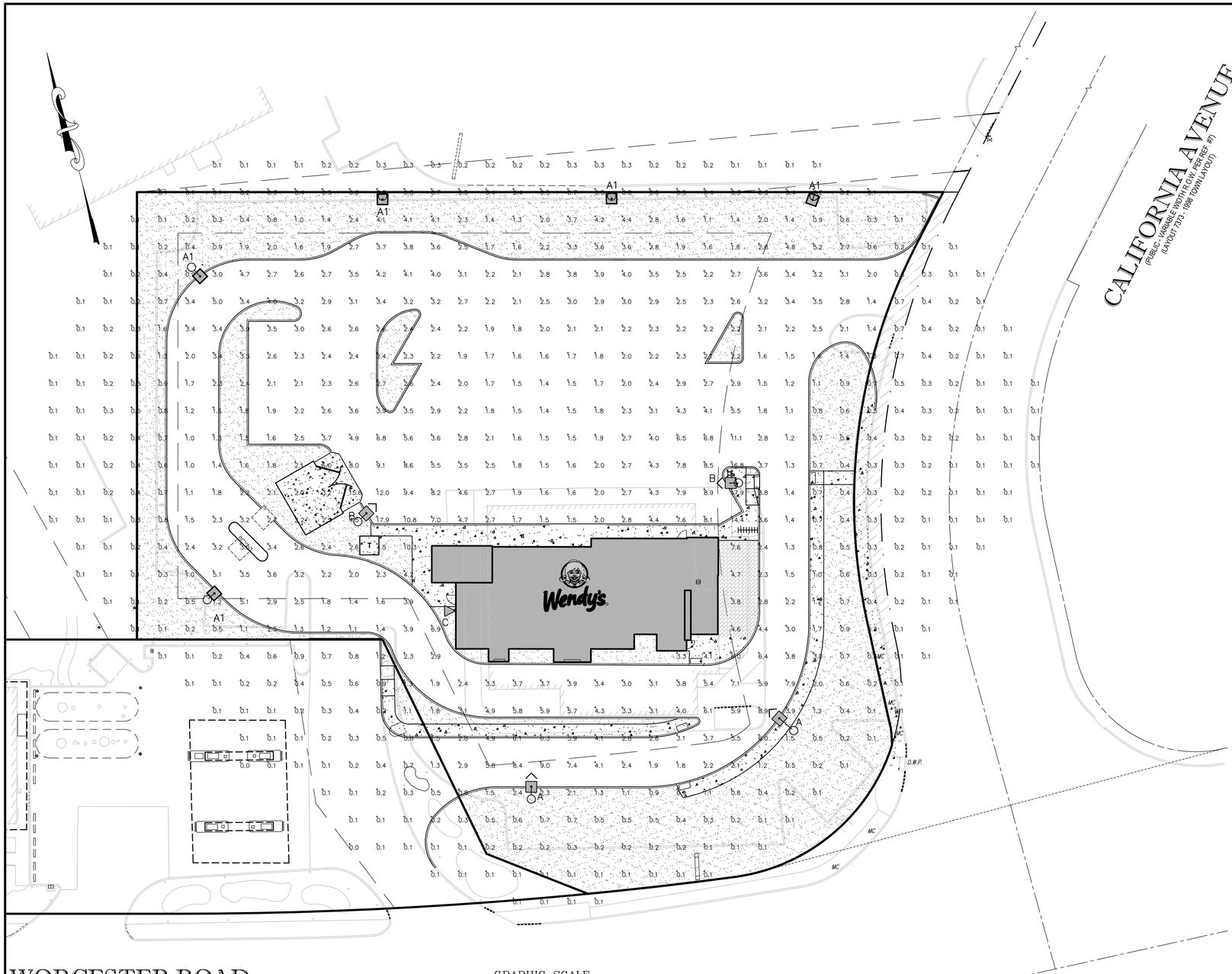

GRAPHIC SCALE

20 0 10 20 40 80

(IN FEET)
1 inch = 20 ft.

XGBM
LED Crossover Area Light

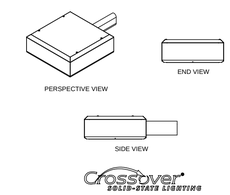

XPWS3
LED Crossover Wall Mount Light

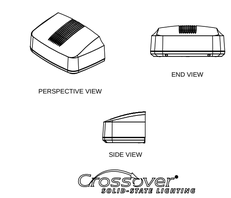

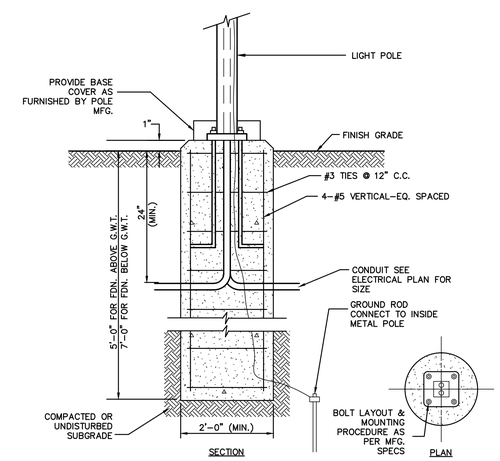

NOTE:
LIGHT POLE FOUNDATION DESIGN IS SUBJECT TO CHANGE BASED ON FINAL POLE AND FIXTURE SELECTION AND GEOTECHNICAL SITE INVESTIGATION.

LIGHT POLE FOUNDATION
NOT TO SCALE

Calculation Summary							
Label	CalcType	Units	Avg	Max	Min	Avg/Min	Max/Min
CalcPts	Illuminance	Fc	1.40	17.9	0.0	N.A.	N.A.
PARKING/DRIVE SUMMARY	Illuminance	Fc	3.39	17.9	1.0	3.39	17.90

Luminaire Schedule								
Symbol	Qty	Label	Arrangement	Description	LLF	Lumens/Lamp	Arr. Lum. Lumens	Arr. Watts
	2	A	SINGLE	XGBM-FT-LED-HO-CW-HSS SINGLE ON 22' POLE + 2' BASE	1.000	N.A.	21164	287.6
	5	A1	SINGLE	XGBM-FT-LED-LW-CW-HSS SINGLE ON 22' POLE + 2' BASE	1.000	N.A.	11660	136.7
	2	B	SINGLE	XGBM-FT-LED-HO-CW SINGLE ON 22' POLE + 2' BASE	1.000	N.A.	29070	300.8
	1	C	SINGLE	XPWS3-FT-LED-48-350-CW-UE	1.000	N.A.	5094	55

DATE	DESCRIPTION OF REVISION
5/27/15	MODIFY LIGHT POLE FOUNDATION HEIGHT
5/11/15	ADD SIGHT TRIANGLES, MOD. HESS PED. ACCESS, ADJUST ESCAPE LANE

PREPARED BY:

Engineering Alliance, Inc.
Civil Engineering & Land Planning Consultants
1950 Lafayette Road
Portsmouth, NH 03801
Tel: (603) 610-7100
Fax: (603) 610-7101

194 Central Street
Saugus, MA 01906
Tel: (781) 231-1349
Fax: (781) 417-0020

PROJECT:
Site Plan
1699 &1701 Worcester Road
(Tax Map 463 Block 9 Lots 28A&28B)
Framingham, Massachusetts

PROJECT #: 144-9001
DATE: February 9, 2015
SCALE: As Noted
DWG FILE NAME: 144-9001.dwg
DESIGN BY: Eric Bradanese
CHECKED BY: Richard A. Salvo, P.E.

COMMONWEALTH OF MASSACHUSETTS
RICHARD A. SALVO
No. 41561
PROFESSIONAL ENGINEER

Professional Engineer for Engineering Alliance, Inc.

APPLICANT:
The Wendy's Company
Northeast Region
40 General Warren Blvd.
Malvern, PA 19335

DRAWING TITLE:
Lighting Plan

DWG. NO.
C-6