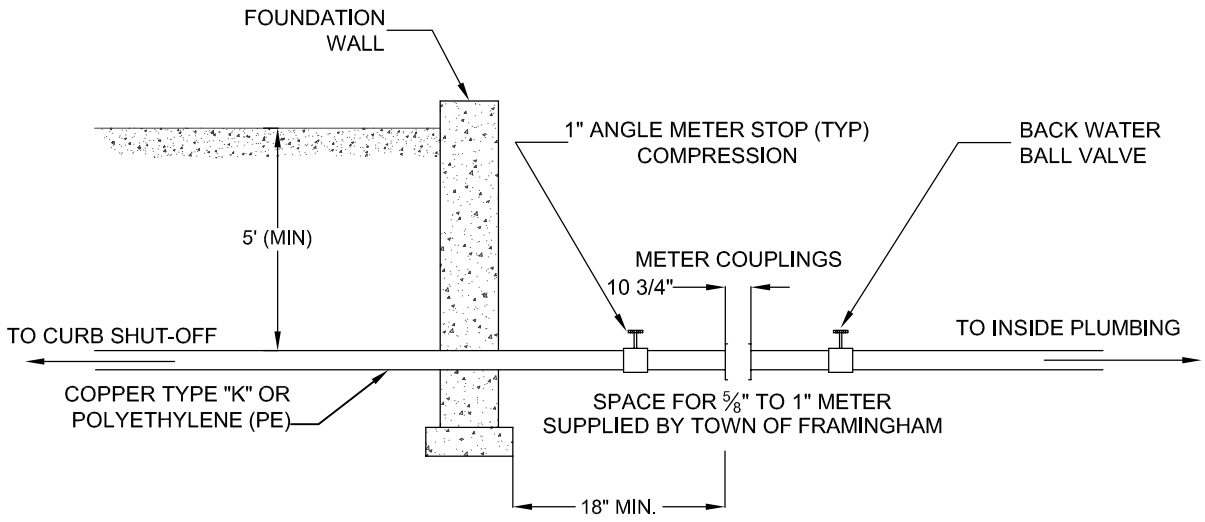

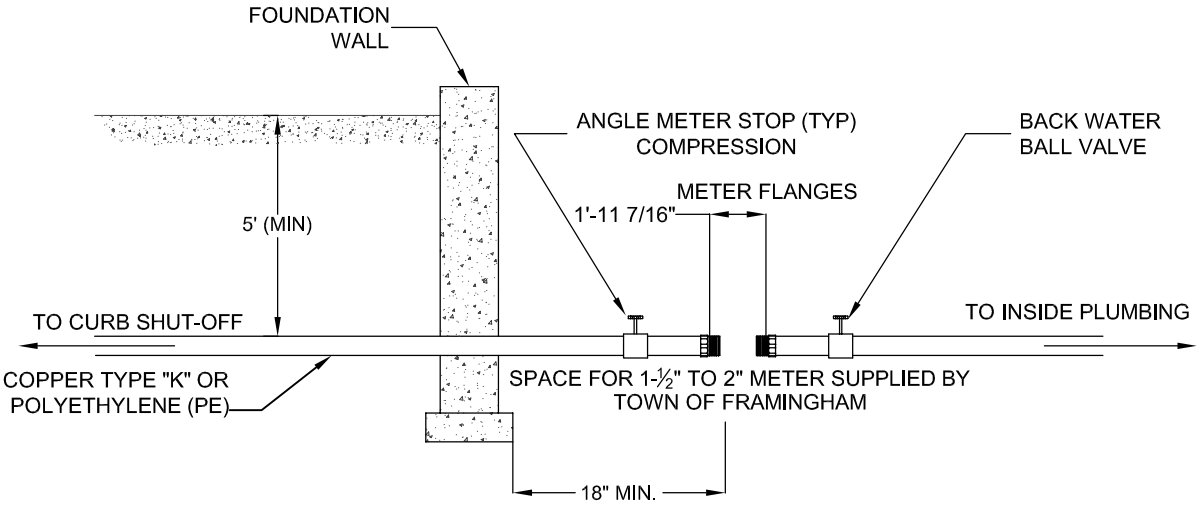

NOT TO SCALE

TOWN OF FRAMINGHAM DEPARTMENT OF PUBLIC WORKS	METER INSTALLATION	DATE: SEPT. 2008 REV: 0	DETAIL NO. W-2.8.0