Site Permit Plans
Framingham Triangle
site plan modification April 02, 2002

Triangle Realty Trust
One Grant Street
Framingham, Massachusetts

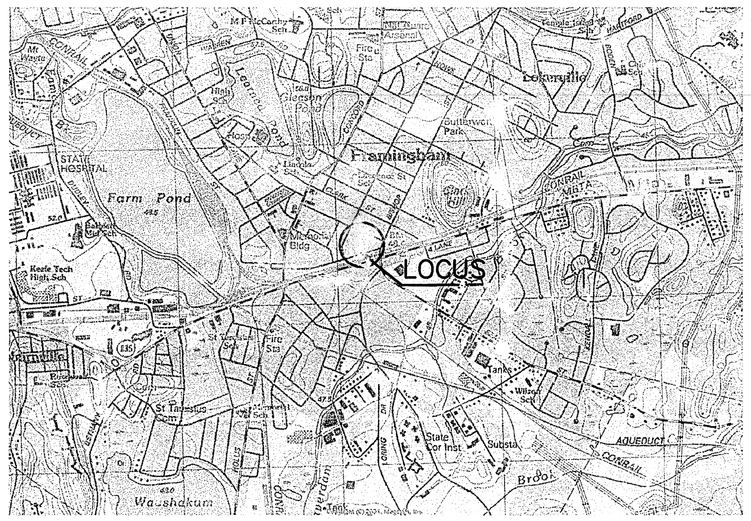

LOCUS MAP

Owner:
Triangle Realty Trust
293 Boston Post Road West
Marlborough, MA 01752

Engineer:
CFI Engineering
33 Fenwick Street
Framingham, MA 01701

Sheet No.	Sheet Title	Sheet No.	Sheet Title
C-1	Cover Sheet	C-8	Construction Details
C-2	Existing Conditions Plan	C-9	Construction Details
C-3	Site Layout and Materials Plan	SL-1	Site Lighting Plan
C-4	Grading and Drainage Plan	L-1	Landscape Planting Plan
C-5	Site Utility Plan	L-2	Landscape Enlarged Area and Plant List
C-6	Sedimentation and Erosion Control Plan	L-3	Landscape Detail Plan
C-7	Construction Details		

Framingham Planning Board Plan Endorsement

Date of Endorsement: 1/28/03

C-1

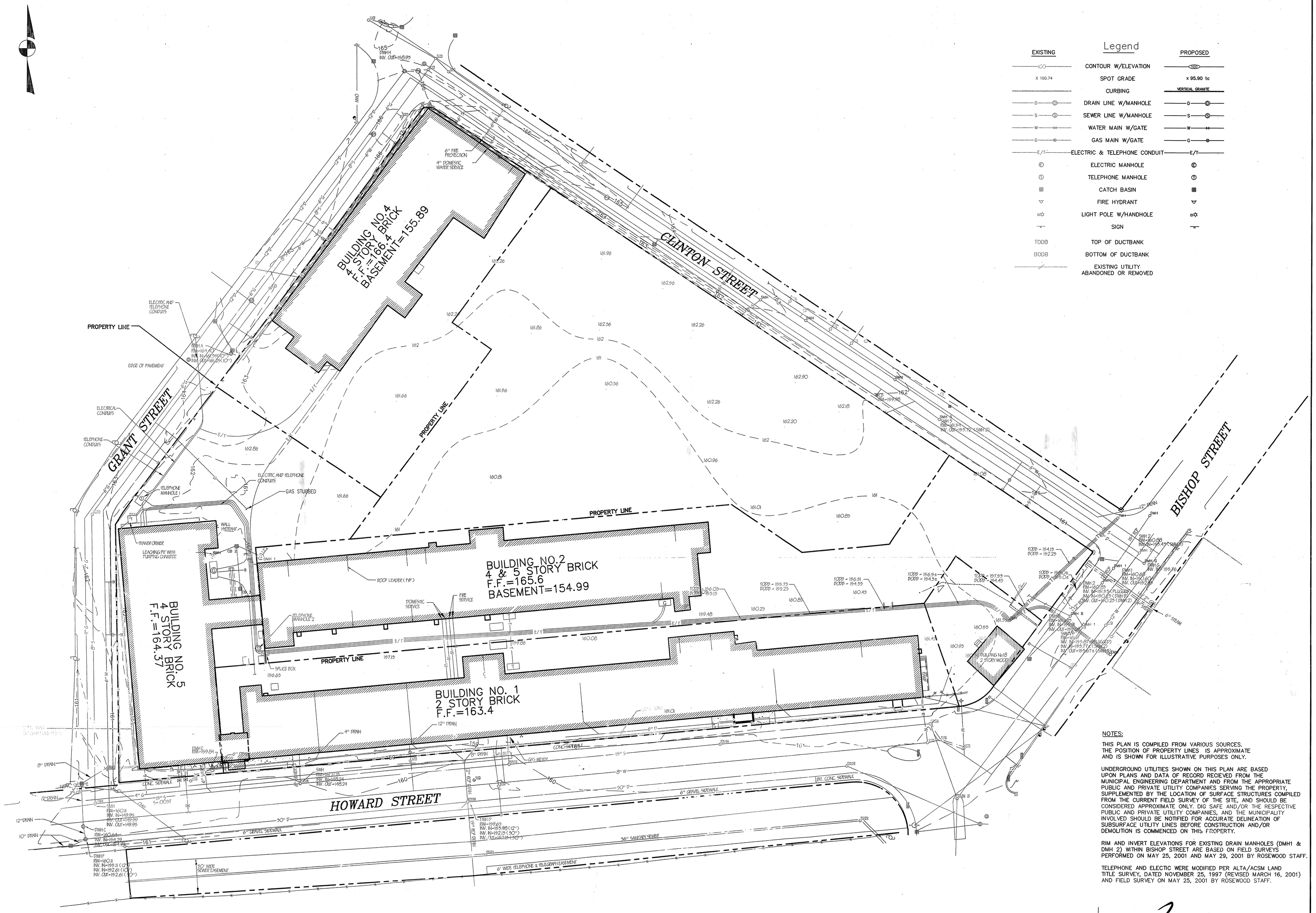

Legend

EXISTING		PROPOSED
100	CONTOUR W/ELEVATION	100
X 100.74	SPOT GRADE	x 95.90 tc
	CURBING	VERTICAL GRANITE
D	DRAIN LINE W/MANHOLE	D
S	SEWER LINE W/MANHOLE	S
W	WATER MAIN W/GATE	W
G	GAS MAIN W/GATE	G
E/T	ELECTRIC & TELEPHONE CONDUIT	E/T
E	ELECTRIC MANHOLE	E
T	TELEPHONE MANHOLE	T
	CATCH BASIN	
	FIRE HYDRANT	
	LIGHT POLE W/HANDHOLE	
	SIGN	
TODB	TOP OF DUCTBANK	
BODB	BOTTOM OF DUCTBANK	
	EXISTING UTILITY ABANDONED OR REMOVED	

NOTES:

THIS PLAN IS COMPILED FROM VARIOUS SOURCES. THE POSITION OF PROPERTY LINES IS APPROXIMATE AND IS SHOWN FOR ILLUSTRATIVE PURPOSES ONLY.

UNDERGROUND UTILITIES SHOWN ON THIS PLAN ARE BASED UPON PLANS AND DATA OF RECORD RECIEVED FROM THE MUNICIPAL ENGINEERING DEPARTMENT AND FROM THE APPROPRIATE PUBLIC AND PRIVATE UTILITY COMPANIES SERVING THE PROPERTY, SUPPLEMENTED BY THE LOCATION OF SURFACE STRUCTURES COMPILED FROM THE CURRENT FIELD SURVEY OF THE SITE, AND SHOULD BE CONSIDERED APPROXIMATE ONLY. DIG SAFE AND/OR THE RESPECTIVE PUBLIC AND PRIVATE UTILITY COMPANIES, AND THE MUNICIPALITY INVOLVED SHOULD BE NOTIFIED FOR ACCURATE DELINEATION OF SUBSURFACE UTILITY LINES BEFORE CONSTRUCTION AND/OR DEMOLITION IS COMMENCED ON THIS PROPERTY.

RIM AND INVERT ELEVATIONS FOR EXISTING DRAIN MANHOLES (DMH1 & DMH 2) WITHIN BISHOP STREET ARE BASED ON FIELD SURVEYS PERFORMED ON MAY 25, 2001 AND MAY 29, 2001 BY ROSEWOOD STAFF.

TELEPHONE AND ELECTIC WERE MODIFIED PER ALTA/ACSM LAND TITLE SURVEY, DATED NOVEMBER 25, 1997 (REVISED MARCH 16, 2001) AND FIELD SURVEY ON MAY 25, 2001 BY ROSEWOOD STAFF.

GRAPHIC SCALE

30 0 15 30 60 120

(IN FEET)
1 inch = 30 ft.

Framingham Planning Board Plan Endorsement

Date of Endorsement : 1/28/03

No.	Date	Description
01	07/08/2002	PARKING LOT DESIGN/NEW GARAGE LOCATION

Revisions

Drawn By	Designed By	Checked By	Approved By
CEF	CEF		

COMMONWEALTH OF MASSACHUSETTS
CARLOS FERREIRA
CIVIL
No. 41423
REGISTERED PROFESSIONAL ENGINEER
1/23/02

CF ENGINEERING

33 Fenwick Street, Framingham, MA 01701
Tel: (508) 331-7261 Fax: (508) 405-1194

Project Title

Framingham Triangle
Triangle Realty Trust
Framingham, MA

Sheet Title

Existing Conditions Plan

Scale: 1"=30'
Job No.: FRAM_TRIAN
File Name: EXISTING
Date: April 02, 2002

Sheet No.

C-2

PRECAST PARKING GARAGE
HEIGHT: 60 FEET (5 STORIES)
CAPACITY: 519 PARKING SPACES
SEE DESIGN PLANS BY STRESCON LIMITED

PARKING TABLE	
9X18 GROUND LEVEL	224
8X16 GROUND LEVEL	23
8X18 PARKING GARAGE	519
8X20 HOWARD STREET	56
HANDCAP	11
TOTAL	833

NOTE:
ALL HANDICAP RAMPS SHALL BE CONSTRUCTED PER ADA STANDARDS. REFER TO SHEET C-8 FOR DETAILS.

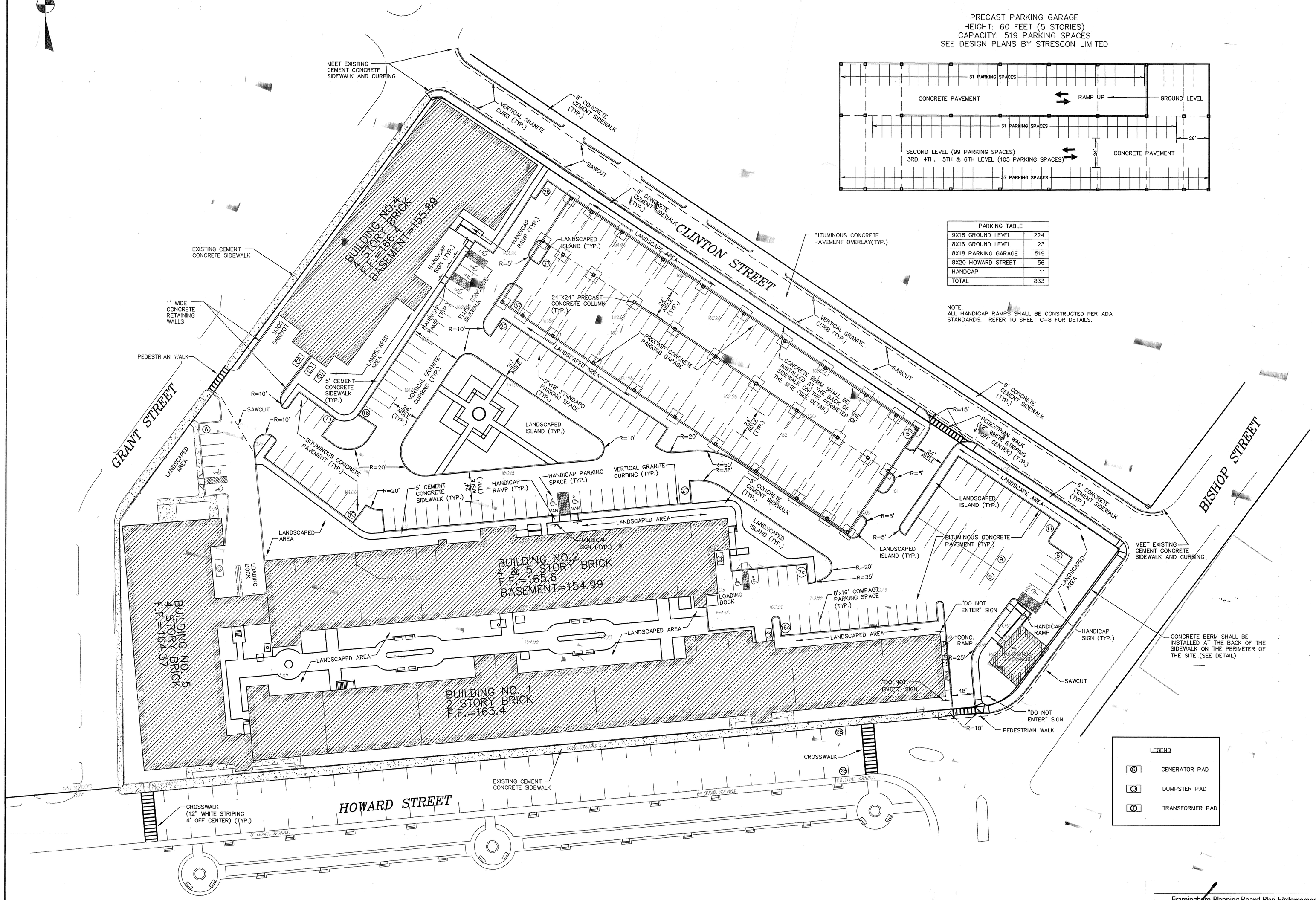

Framingham Planning Board Plan Endorsement

Date of Endorsement : 1/28/03

No.	Date	Description
01	07/08/2002	PARKING LOT DESIGN/NEW GARAGE LOCATION

Revisions

Drawn By	Designed By	Checked By	Approved By
CEF	CEF		

COMMONWEALTH OF MASSACHUSETTS
CARLOS FERREIRA
CIVIL
No. 41423
REGISTERED PROFESSIONAL ENGINEER
7/23/02

CF ENGINEERING
33 Fenwick Street, Framingham, MA 01701
Tel: (508) 331-7261 Fax: (508) 405-1194

Project Title
Framingham Triangle
Triangle Realty Trust
Framingham, MA

Sheet Title
Site Layout
and
Materials Plan

Scale: 1"=30'
Job No.:
File Name:
Date: April 2, 2002

Sheet No.
C-3

NOTES:

THIS PLAN IS COMPILED FROM VARIOUS SOURCES. THE POSITION OF PROPERTY LINES IS APPROXIMATE AND IS SHOWN FOR ILLUSTRATIVE PURPOSES ONLY.

UNDERGROUND UTILITIES SHOWN ON THIS PLAN ARE BASED UPON PLANS AND DATA OF RECORD RECEIVED FROM THE MUNICIPAL ENGINEERING DEPARTMENT AND FROM THE APPROPRIATE PUBLIC AND PRIVATE UTILITY COMPANIES SERVING THE PROPERTY, SUPPLEMENTED BY THE LOCATION OF SURFACE STRUCTURES COMPILED FROM THE CURRENT FIELD SURVEY OF THE SITE, AND SHOULD BE CONSIDERED APPROXIMATE ONLY. DIG SAFE AND/OR THE RESPECTIVE PUBLIC AND PRIVATE UTILITY COMPANIES, AND THE MUNICIPALITY INVOLVED SHOULD BE NOTIFIED FOR ACCURATE DELINEATION OF SUBSURFACE UTILITY LINES BEFORE CONSTRUCTION AND/OR DEMOLITION IS COMMENCED ON THIS PROPERTY.

LEGEND

Q	WATER QUALITY STRUCTURE
D	DRAIN MANHOLE
	DOUBLE CATCH BASIN
	CATCH BASIN
x 160.5	PROPOSED SPOT GRADE
161	PROPOSED ELEVATION AND CONTOUR

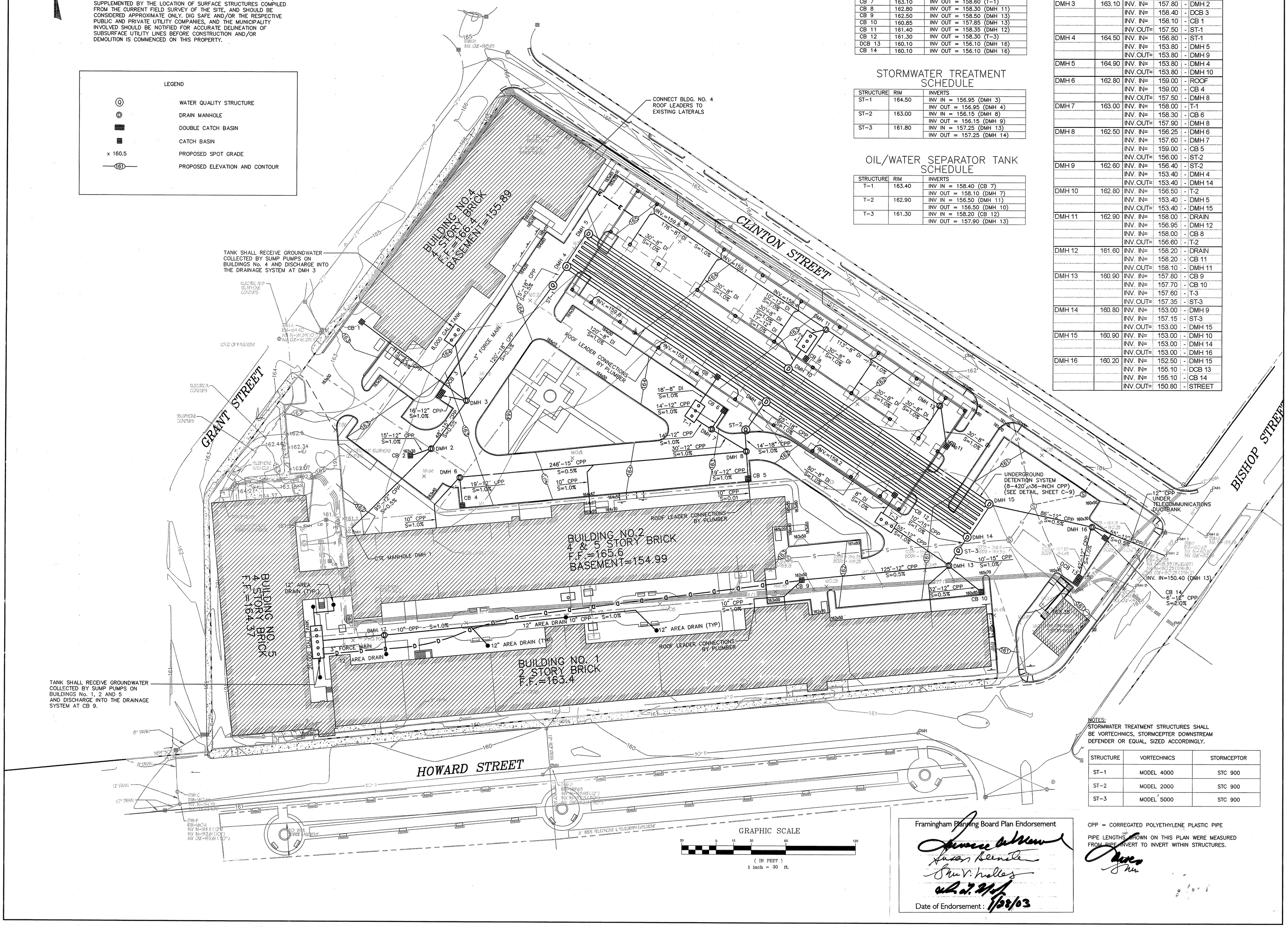

CATCHBASIN SCHEDULE

STRUCTURE	RIM	INVERTS
CB 1	162.70	INV OUT = 158.70 (DMH 3)
CB 2	162.30	INV OUT = 158.40 (DMH 2)
DCB 3	162.60	INV OUT = 158.60 (DMH 3)
CB 4	163.70	INV OUT = 159.20 (DMH 6)
CB 5	163.70	INV OUT = 159.20 (DMH 8)
CB 6	163.00	INV OUT = 158.50 (DMH 7)
CB 7	163.10	INV OUT = 158.60 (T-1)
CB 8	162.80	INV OUT = 158.30 (DMH 11)
CB 9	162.50	INV OUT = 158.50 (DMH 13)
CB 10	160.85	INV OUT = 157.85 (DMH 13)
CB 11	161.40	INV OUT = 158.35 (DMH 12)
CB 12	161.30	INV OUT = 158.30 (T-3)
DCB 13	160.10	INV OUT = 156.10 (DMH 16)
CB 14	160.10	INV OUT = 156.10 (DMH 16)

STORMWATER TREATMENT SCHEDULE

STRUCTURE	RIM	INVERTS
ST-1	164.50	INV IN = 156.95 (DMH 3)
		INV OUT = 156.95 (DMH 4)
ST-2	163.00	INV IN = 156.15 (DMH 8)
		INV OUT = 156.15 (DMH 9)
ST-3	161.80	INV IN = 157.25 (DMH 13)
		INV OUT = 157.25 (DMH 14)

OIL/WATER SEPARATOR TANK SCHEDULE

STRUCTURE	RIM	INVERTS
T-1	163.40	INV IN = 158.40 (CB 7)
		INV OUT = 158.10 (DMH 7)
T-2	162.90	INV IN = 156.50 (DMH 11)
		INV OUT = 156.50 (DMH 10)
T-3	161.30	INV IN = 158.20 (CB 12)
		INV OUT = 157.90 (DMH 13)

DRAIN MANHOLE SCHEDULE

STRUCTURE	RIM	INVERTS			
DMH 1	162.10	INV. IN=	158.80	-	
		INV.OUT=	158.80	-	DMH 2
DMH 2	162.50	INV. IN=	158.30	-	DMH 1
		INV. IN=	158.30	-	CB 2
		INV.OUT=	158.05	-	DMH 3
DMH 3	163.10	INV. IN=	157.80	-	DMH 2
		INV. IN=	158.40	-	DCB 3
		INV. IN=	158.10	-	CB 1
		INV.OUT=	157.50	-	ST-1
DMH 4	164.50	INV. IN=	156.80	-	ST-1
		INV. IN=	153.80	-	DMH 5
		INV.OUT=	153.80	-	DMH 9
DMH 5	164.90	INV. IN=	153.80	-	DMH 4
		INV.OUT=	153.80	-	DMH 10
DMH 6	162.80	INV. IN=	159.00	-	ROOF
		INV. IN=	159.00	-	CB 4
		INV.OUT=	157.50	-	DMH 8
DMH 7	163.00	INV. IN=	158.00	-	T-1
		INV. IN=	158.30	-	CB 6
		INV.OUT=	157.90	-	DMH 8
DMH 8	162.50	INV. IN=	156.25	-	DMH 6
		INV. IN=	157.60	-	DMH 7
		INV. IN=	159.00	-	CB 5
		INV.OUT=	156.00	-	ST-2
DMH 9	162.60	INV. IN=	156.40	-	ST-2
		INV. IN=	153.40	-	DMH 4
		INV.OUT=	153.40	-	DMH 14
DMH 10	162.80	INV. IN=	156.50	-	T-2
		INV. IN=	153.40	-	DMH 5
		INV.OUT=	153.40	-	DMH 15
DMH 11	162.90	INV. IN=	158.00	-	DRAIN
		INV. IN=	156.95	-	DMH 12
		INV. IN=	158.00	-	CB 8
		INV.OUT=	156.60	-	T-2
DMH 12	161.60	INV. IN=	158.20	-	DRAIN
		INV. IN=	158.20	-	CB 11
		INV.OUT=	158.10	-	DMH 11
DMH 13	160.90	INV. IN=	157.80	-	CB 9
		INV. IN=	157.70	-	CB 10
		INV. IN=	157.60	-	T-3
		INV.OUT=	157.35	-	ST-3
DMH 14	160.80	INV. IN=	153.00	-	DMH 9
		INV. IN=	157.15	-	ST-3
		INV.OUT=	153.00	-	DMH 15
DMH 15	160.90	INV. IN=	153.00	-	DMH 10
		INV. IN=	153.00	-	DMH 14
		INV.OUT=	153.00	-	DMH 16
DMH 16	160.20	INV. IN=	152.50	-	DMH 15
		INV. IN=	155.10	-	DCB 13
		INV. IN=	155.10	-	CB 14
		INV.OUT=	150.80	-	STREET

NOTES:
STORMWATER TREATMENT STRUCTURES SHALL BE VORTECHNICS, STORMCEPTER DOWNSTREAM DEFENDER OR EQUAL, SIZED ACCORDINGLY.

STRUCTURE	VORTECHNICS	STORMCEPTOR
ST-1	MODEL 4000	STC 900
ST-2	MODEL 2000	STC 900
ST-3	MODEL 5000	STC 900

CPP = CORREGATED POLYETHYLENE PLASTIC PIPE

PIPE LENGTHS SHOWN ON THIS PLAN WERE MEASURED FROM PIPE INVERT TO INVERT WITHIN STRUCTURES.

GRAPHIC SCALE

30 0 15 30 60 120

(IN FEET)
1 inch = 30 ft.

Framingham Planning Board Plan Endorsement

Date of Endorsement: 1/28/03

No.	Date	Description
01	07/08/2002	PARKING LOT DESIGN/NEW GARAGE LOCATION

Revisions

Drawn By	Designed By	Checked By	Approved By
CEF	CEF		

COMMONWEALTH OF MASSACHUSETTS
CARLOS FERREIRA
CIVIL
No. 41423
REGISTERED PROFESSIONAL ENGINEER
4/23/02

CF ENGINEERING
33 Fenwick Street, Framingham, MA 01701
Tel: (508) 351-7261 Fax: (508) 405-1194

Project Title
Framingham Triangle
Triangle Realty Trust
Framingham, MA

Sheet Title
Grading and Drainage Plan

Scale: 1"=30'
Job No.: FRAM_TRIAN
File Name: GRADING_P
Date: April 2, 2002

Sheet No.
C-4

NOTES:

THIS PROPOSED UTILITY PLAN DOES NOT DEPICT THE EXISTING UTILITIES THAT WERE ABANDONED AND LEFT IN PLACE. CONTRACTOR TO USE CAUTION WHEN PERFORMING ALL SUBSURFACE WORK.

TELEPHONE AND ELECTIC WERE MODIFIED PER ALTA/ACSM LAND TITLE SURVEY, DATED NOVEMBER 25, 1997 (REVISED MARCH 16, 2001) AND FIELD SURVEY PERFORMED BY ROSEWOOD STAFF ON MAY 25, 2001.

EXISTING CONDITION SURVEY WAS MODIFIED BY CF ENGINEERING TO INCLUDE RIM AND INVERT ELEVATIONS FOR EXISTING SEWER MANHOLES (SMH 1, SMH 2 & SMH 3 WITHIN BISHOP AND CLINTON STREETS BASED ON FIELD SURVEYS PERFORMED BY ROSEWOOD STAFF ON JUNE 4 AND JUNE 6, 2001.

PIPE LENGTHS SHOWN ON THIS PLAN WERE MEASURED FROM PIPE INVERT TO INVERT WITHIN STRUCTURES.

ANY PIPE & STRUCTURE INSTALLED UNDER THE PARKING GARAGE STRUCTURE SHALL CONFORM WITH 780 CMR MASSACHUSETTS STATE BUILDING CODE & PLUMBING CODE.

LEGEND

—S—	SEWER
—G—	GAS
CTE	CONNECT TO EXISTING

SEWER MANHOLE SCHEDULE

STRUCTURE	RIM	INVERTS
SMH 1	163.00	INV IN = 157.40 (BLDG NO.2)
		INV OUT = 157.30 (SMH2)
SMH 2	160.60	INV IN = 155.40 (SMH 1)
		INV OUT = 155.30 (SMH 3)
SMH 3	160.70	INV IN = 155.00 (SMH 3)
		INV IN = 157.35 (BLDG NO.18)
		INV OUT = 154.90 (SMH4)
EXIST. SMH	161.54	INV IN = 154.00 (SMH 3)
		INV OUT = 153.72

* PRIOR TO PURCHASE AND PLACEMENT, CONTRACTOR TO VERIFY EXISTING SEWER STUB INVERT AND LATERAL LOCATION.

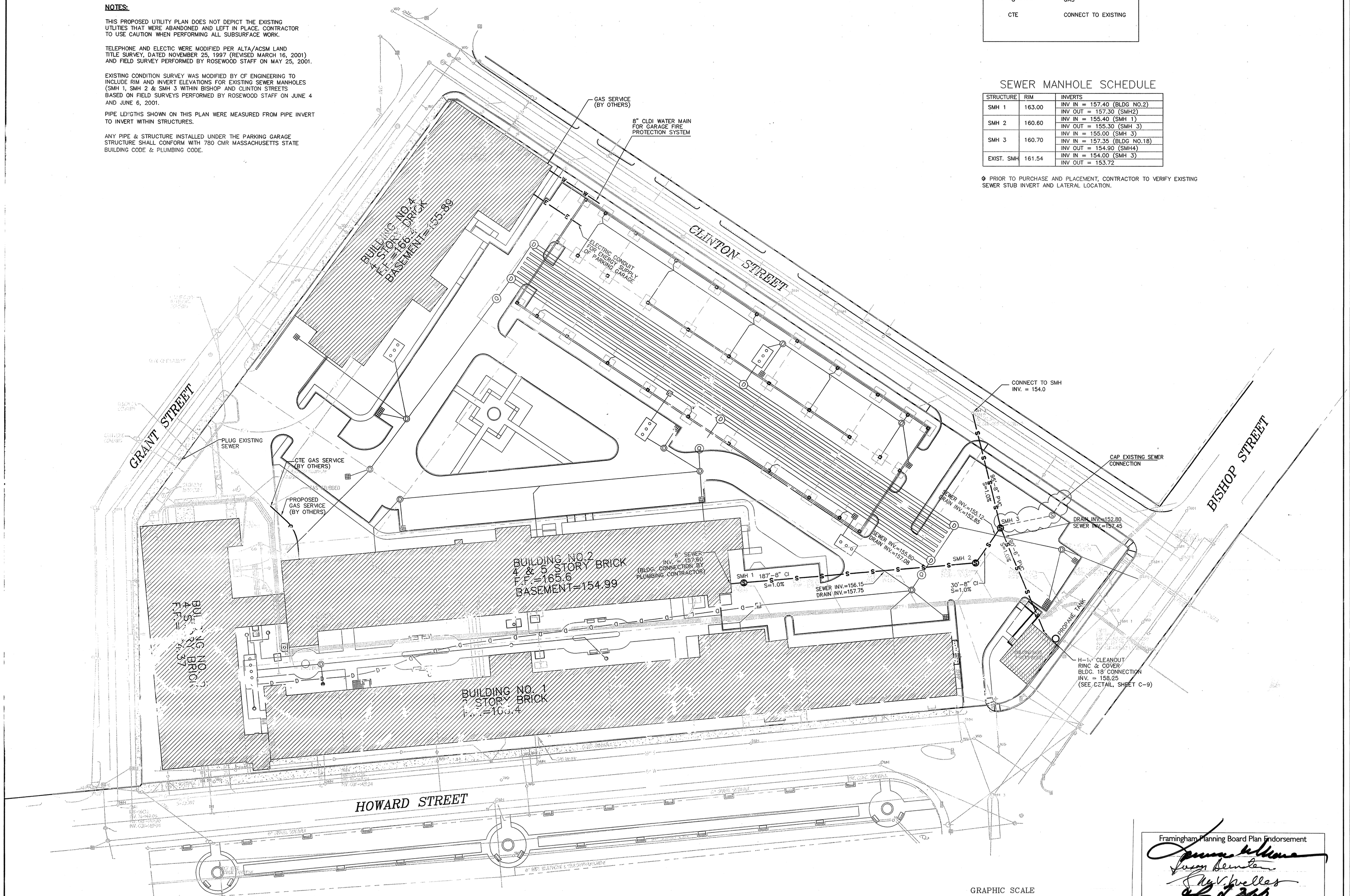

GRAPHIC SCALE

30 0 15 30 60 120

(IN FEET)
1 inch = 30 ft.

Framingham Planning Board Plan Endorsement

Date of Endorsement : 1/28/03

No.	Date	Description
01	07/08/2002	PARKING LOT DESIGN/NEW GARAGE LOCATION

Revisions

Drawn By	Designed By	Checked By	Approved By
CEF	CEF		

COMMONWEALTH OF MASSACHUSETTS
CARLOS FERREIRA
CIVIL
No. 41423
REGISTERED PROFESSIONAL ENGINEER

7/23/02

CF ENGINEERING

33 Fenwick Street, Framingham, MA 01701
Tel: (508) 331-7261 Fax: (508) 405-1134

Project Title

Framingham Triangle
Triangle Realty Trust
Framingham, MA

Sheet Title

Site Utility Plan

Scale: 1"=30'
Job No.: FRAM_TRAIN
File Name: UTILITY
Date: April 02, 2002

Sheet No.

C-5

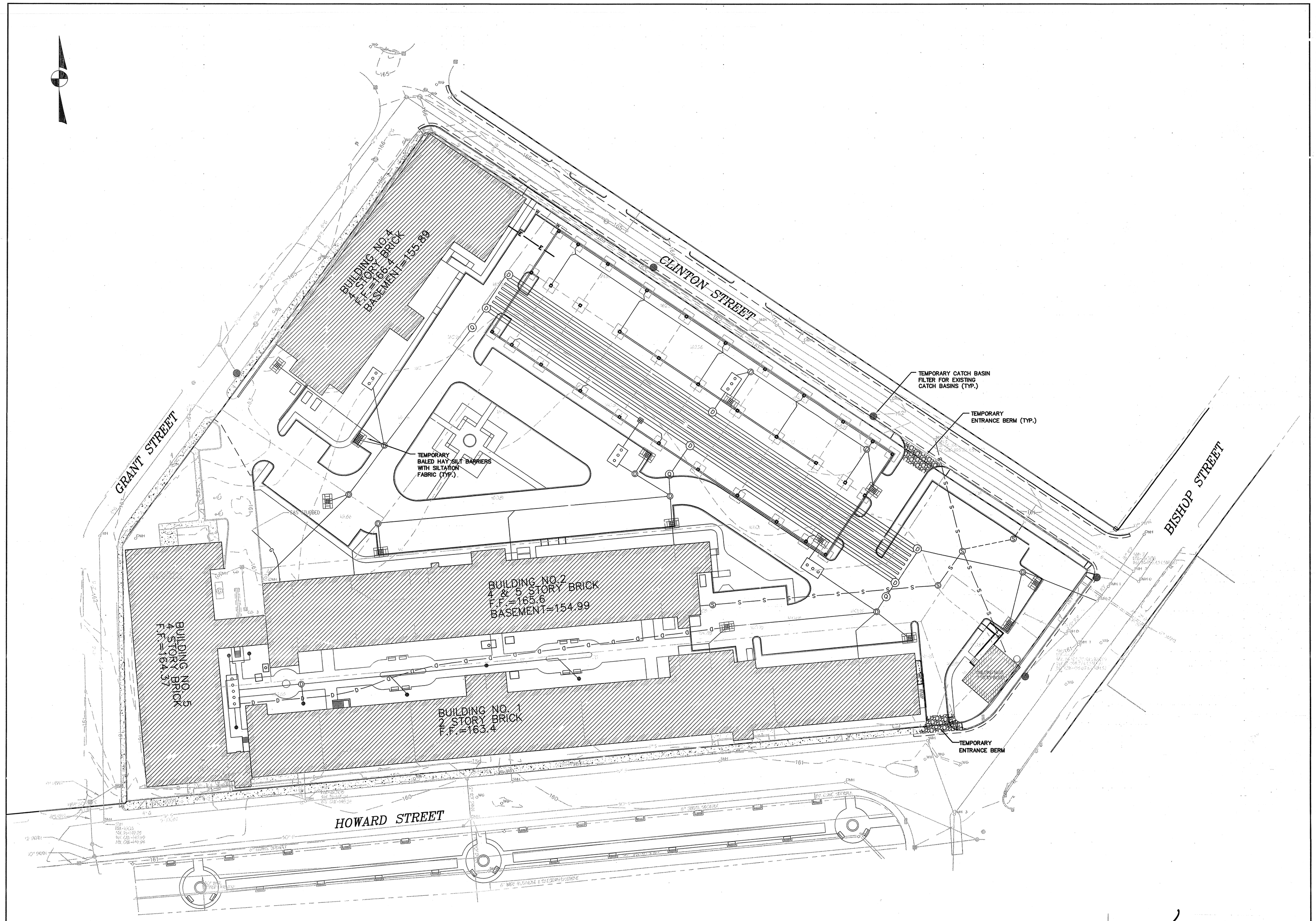

Framingham Planning Board Plan Endorsement

Date of Endorsement : 1/28/03

No.	Date	Description
01	07/08/2002	PARKING LOT DESIGN/NEW GARAGE LOCATION

Revisions

Drawn By	Designed By	Checked By	Approved By
CEF	CEF		

COMMONWEALTH OF MASSACHUSETTS
CARLOS FERREIRA
CIVIL
No. 41423
REGISTERED PROFESSIONAL ENGINEER

7/23/02

CF ENGINEERING

33 Fenwick Street, Framingham, MA 01701
Tel: (508) 331-7281 Fax: (508) 405-1194

Project Title

Framingham Triangle
Triangle Realty Trust
Framingham, MA

Sheet Title

Sedimentation and Erosion Control Plan

Scale: 1"=30'
Job No.: FRAM_TRIAN
File Name: EROSION
Date: April 02, 2002

Sheet No.
C-6

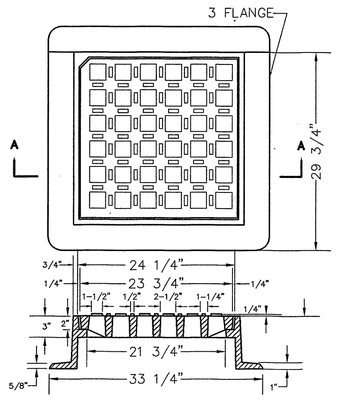

SECTION A–A

NOTE: FRAME AND GRATE SHALL BE HEAVY DUTY CLASS 30 GRAY IRON.

CATCH BASIN FRAME AND GRATE

N.T.S.

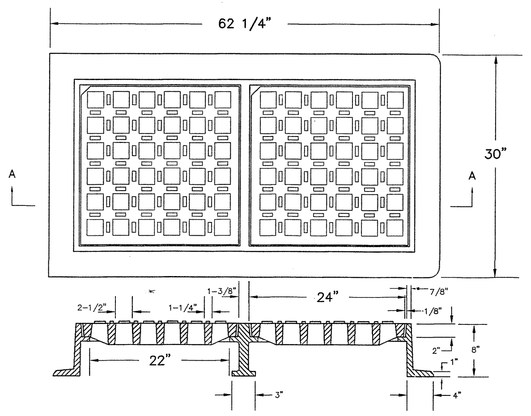

SECTION A–A

NOTE: FRAME AND GRATE SHALL BE HEAVY DUTY CLASS 30 GRAY IRON.

DOUBLE CATCH BASIN FRAME AND GRATE

N.T.S.

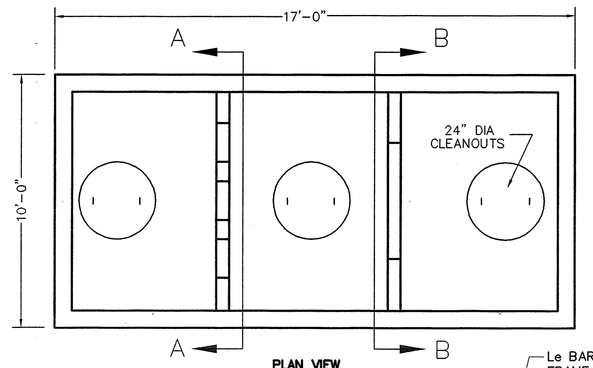

PLAN VIEW

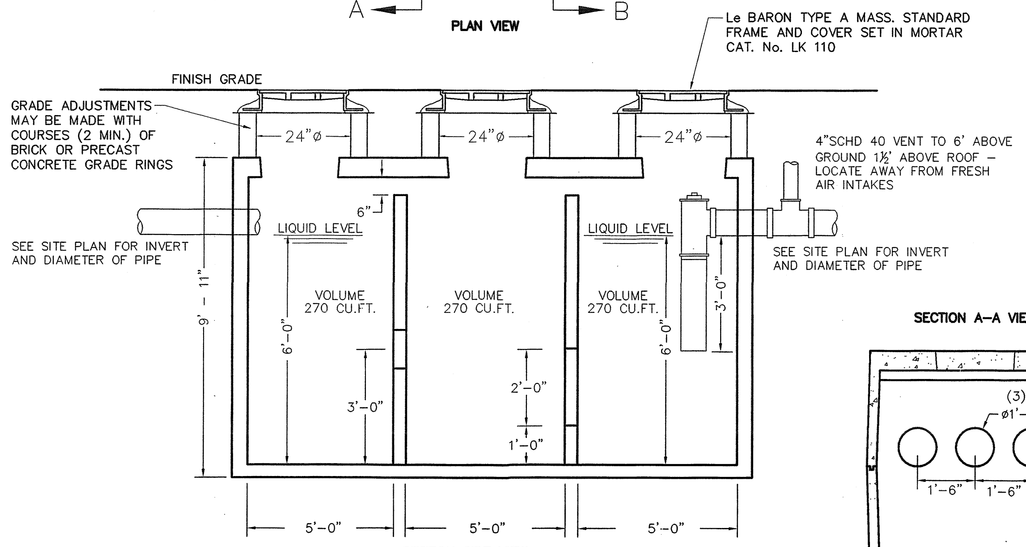

SECTION SIDE VIEW

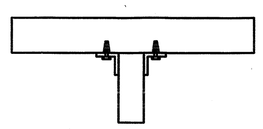

BAFFLE WALL DETAIL

NOTES:

1. CONCRETE: 4,000 PSI MINIMUM AFTER 28 DAYS.
2. ALL REINFORCEMENT PER ASTM C1227–93.
3. DESIGNED FOR H–20 LOADING.

SECTION A–A VIEW

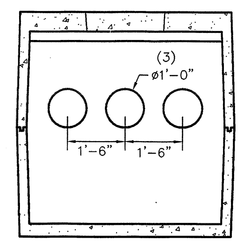

SECTION B–B VIEW

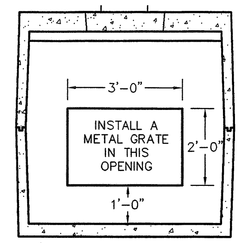

SEDIMENT & OIL SEPARATOR 8000 GALLON TANK

N.T.S.

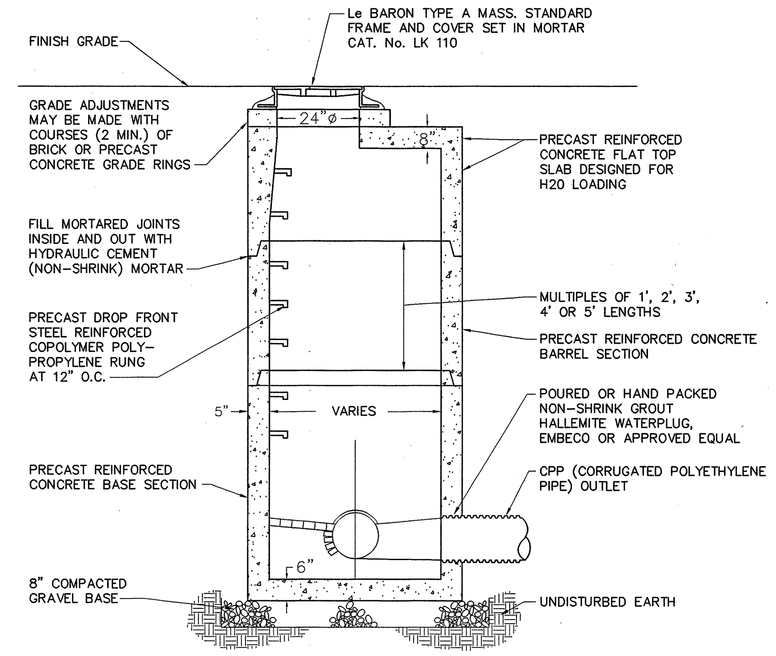

PRECAST CONCRETE DRAIN MANHOLE

N.T.S.

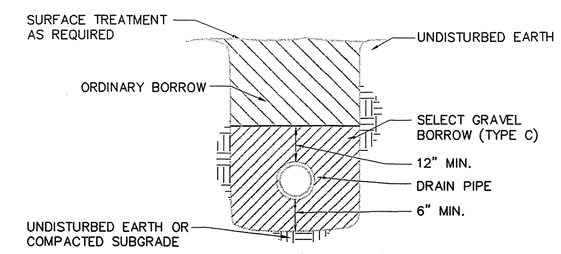

NOTES

1. CONTRACTOR SHALL SUBMIT PIPE CLASS SCHEDULE TO ENGINEER FOR APPROVAL.
2. TRENCH WIDTH AT CROWN = 2.5 x PIPE DIAMETER.

DRAIN PIPE BEDDING DETAIL

N.T.S.

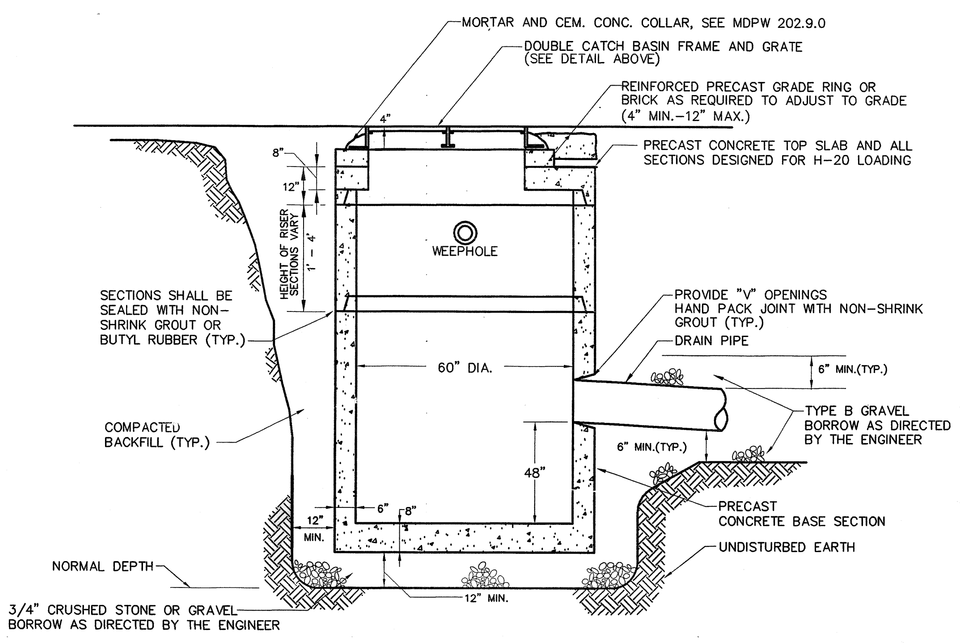

PRECAST CONCRETE DOUBLE CATCH BASIN DETAIL

N.T.S.

NOTES

1. CATCH BASIN SHALL BE PRECAST CEMENT CONCRETE MANUFACTURED IN ACCORDANCE WITH ASTM C–478 DESIGNED FOR H–20 LOADING.
2. DRAIN PIPE FOR LATERAL CONNECTIONS SHALL BE INSTALLED AND TEMPORARILY PLUGGED AS REQUIRED OR DIRECTED.
3. SEE GENERAL PLANS FOR PIPE SIZE, LINE AND GRADE.
4. BACKFILL MATERIAL SHALL CONSIST OF SUITABLE EXCAVATED MATERIAL AND/OR TYPE B GRAVEL BORROW AS DIRECTED BY THE ENGINEER.
5. INSTALL FRAME & GRATE WITH 24" SIDE ALONG CURB.

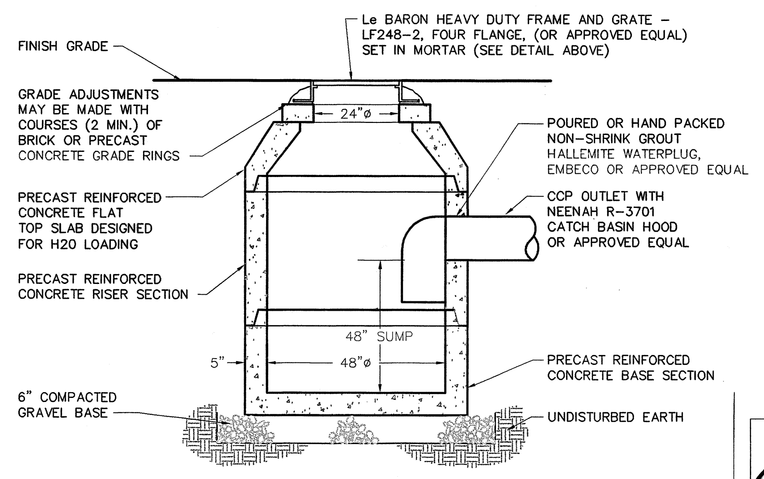

PRECAST CONCRETE CATCH BASIN DETAIL

N.T.S.

Framingham Planning Board Plan Endorsement

Date of Endorsement : 1/23/03

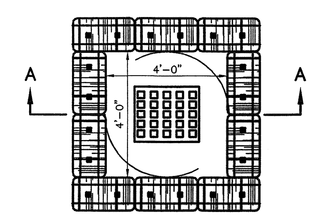

PLAN

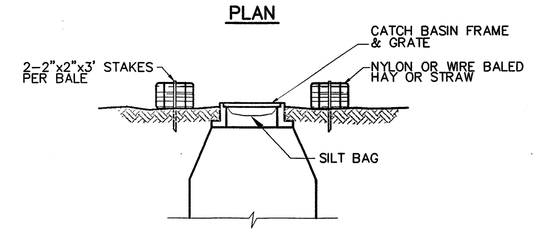

SECTION A–A

BALED HAY SILT BARRIER AROUND CATCH BASIN

N.T.S.

NOT FOR CONSTRUCTION

THESE PLANS WERE PREPARED FOR THE PURPOSE OF OBTAINING STATE AND LOCAL APPROVALS AND ARE NOT INTENDED TO BE USED AS CONSTRUCTION DOCUMENTS.

No.	Date	Description
01	07/08/2002	PARKING LOT DESIGN/NEW GARAGE LOCATION

Revisions

Drawn By	Designed By	Checked By	Approved By
CEF	CEF		

COMMONWEALTH OF MASSACHUSETTS CARLOS FERREIRA CIVIL No. 41423 REGISTERED PROFESSIONAL ENGINEER

7/23/02

CF ENGINEERING

33 Fenwick Street, Framingham, MA 01701
Tel: (508) 331-7261 Fax: (508) 405-1194

Project Title

Framingham Triangle
Triangle Realty Trust
Framingham, MA

Sheet Title

Construction Details

Scale: NOT TO SCALE
Job No.: FRAM_TRIAN
File Name: DETAIL
Date: April 02, 2002

Sheet No.

C-7

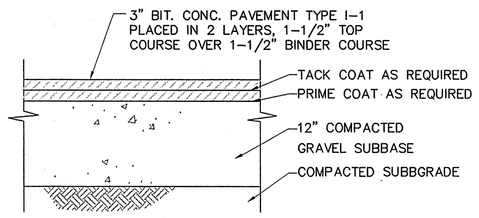

BITUMINOUS CONCRETE PAVEMENT CONSTRUCTION DETAIL

N.T.S.

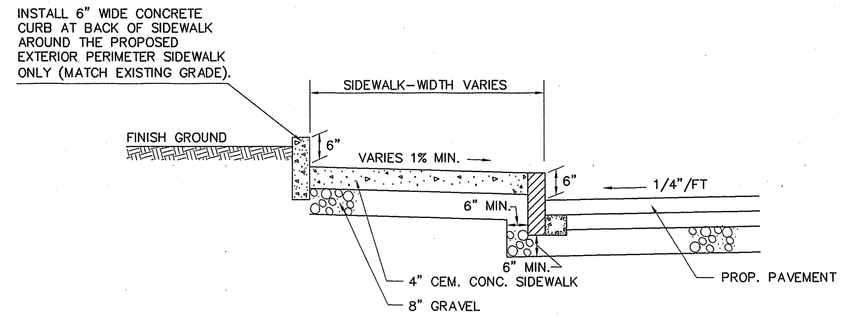

CEMENT CONCRETE SIDEWALK DETAIL

N.T.S.

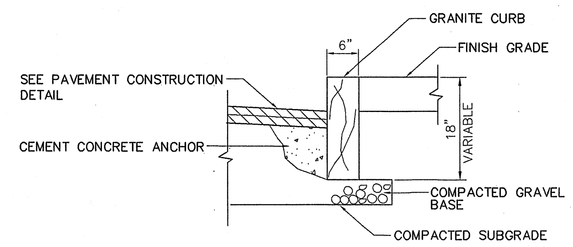

VERTICAL GRANITE CURB

N.T.S.

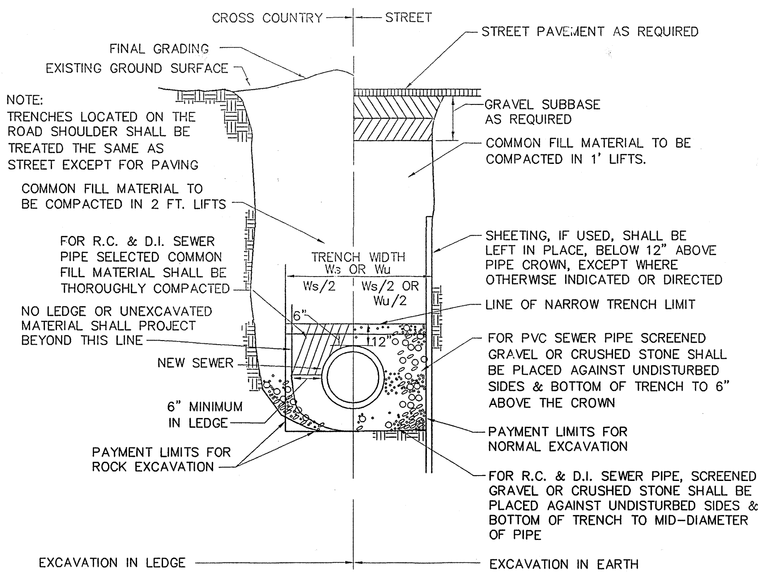

SEWER TRENCH SECTION

N.T.S.

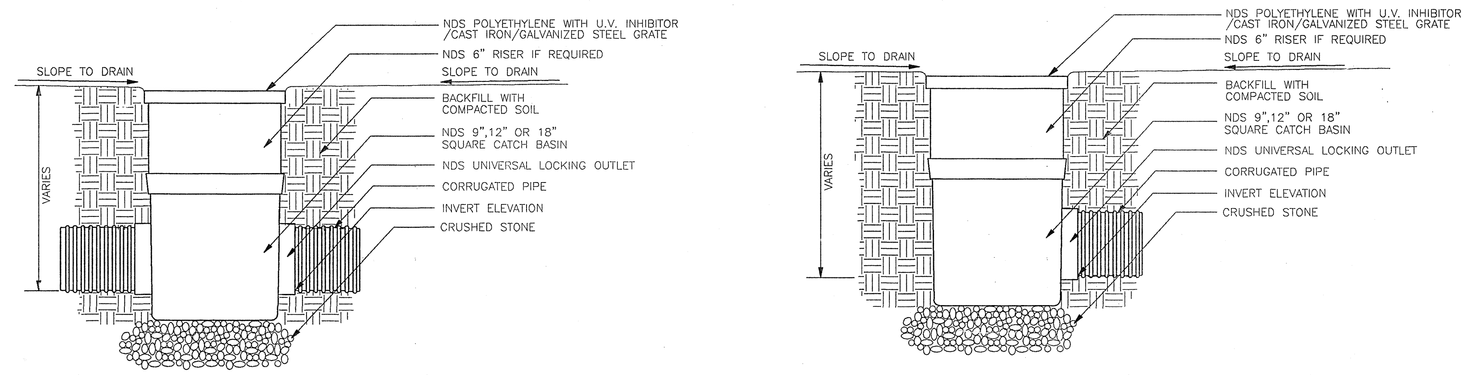

AREA DRAIN DETAIL
NDS SQUARE GRATE WITH NDS SQUARE CATCH BASIN

N.T.S.

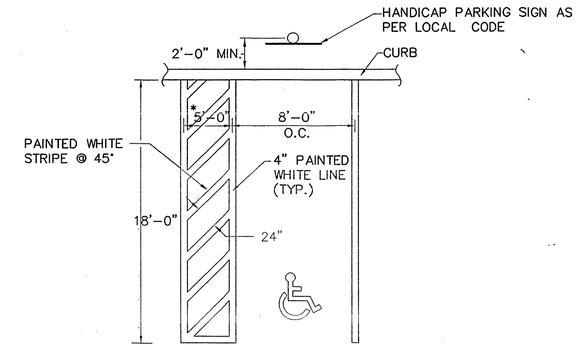

* PAINTED AISLE 8'-0" WIDE FOR HC VAN SPACES.

HANDICAP SPACE DETAIL

N.T.S.

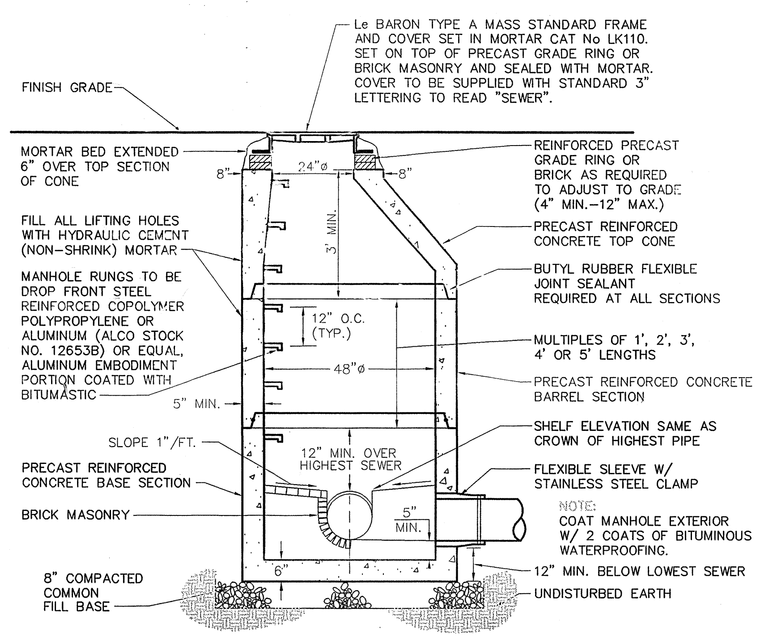

PRECAST CONCRETE SEWER MANHOLE

N.T.S.

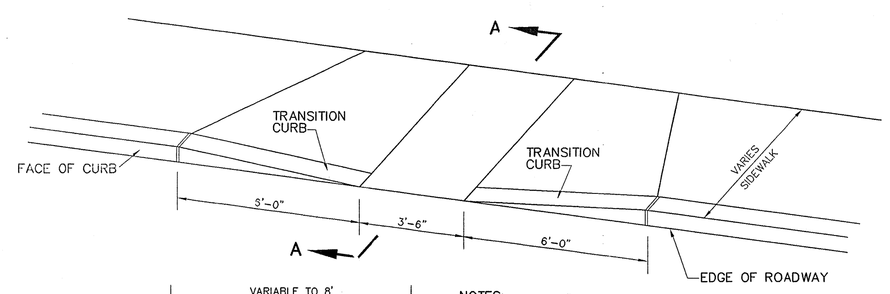

J:\RIZDET\EROSION\E20.DWG

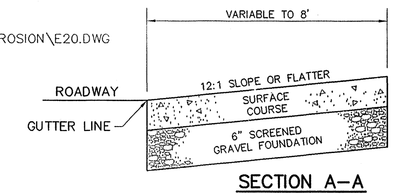

SECTION A-A

NOTES:
1. THE DIMENSIONS SHOWN AT ROADWAY EDGE ARE FIXED DISTANCES.
2. AN UNOBSTRUCTED PATH OF TRAVEL WITH A MINIMUM WIDTH OF 36 INCHES SHALL BE MAINTAINED THROUGHOUT THE PROJECT.
3. PORTLAND CEMENT CONCRETE RAMPS SHALL HAVE A COARSE BROOM TEXTURE. THE RAMP TEXTURE SHALL BE PARALLEL TO THE LINE OF SLOPE. THE SIDE SLOPE TEXTURE SHALL BE PERPENDICULAR TO THE DIAGONAL SCORE LINE.
4. IN NO CASE ARE THE RAMPS TO BE PLACED BEHIND THE STOP LINE.
5. THE ENTRANCE OF THE HANDICAP RAMP SHALL BE FLUSH WITH THE ROADWAY.
7. WHEN A UTILITY POLE OR OTHER FIXED OBJECTS FALL WITHIN THE CROSSWALK AREA OF A SIDEWALK, THE HANDICAP RAMP WILL BE LOCATED SUCH THAT THE OBSTRUCTIONS FALL OUTSIDE OF THE RAMP.
8. THESE DIMENSIONS ARE SUBJECT TO CHANGE IN THE FIELD IF EXISTING APPURTENANCES OR CONDITIONS WILL MAKE THE RAMP LOCATIONS IMPRACTICAL OR UNSAFE.

HANDICAP RAMP DETAIL

Framingham Planning Board Plan Endorsement

Date of Endorsement: 1/28/03

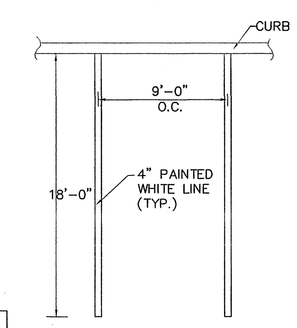

STANDARD SPACE DETAIL

N.T.S.

*COMPACT SPACE 8'X16'

NOT FOR CONSTRUCTION

THESE PLANS WERE PREPARED FOR THE PURPOSE OF OBTAINING STATE AND LOCAL APPROVALS AND ARE NOT INTENDED TO BE USED AS CONSTRUCTION DOCUMENTS.

No.	Date	Description
01	07/08/2002	PARKING LOT DESIGN/NEW DATAGE LOCATION

Revisions

Drawn By	Designed By	Checked By	Approved By
CEF	CEF		

COMMONWEALTH OF MASSACHUSETTS CHARLES E. FAIRWEATHER III No. 41423 CIVIL 7/23/02

CF ENGINEERING
33 Fenwick Street, Framingham, MA 01701
Tel: (508) 331-7201 Fax: (508) 405-...

Project Title
Framingham Triangle Triangle Realty Trust Framingham, MA

Sheet Title
Construction Details

Scale: NOT TO SCALE
Job No.: FRAM_TRIAN
File Name: DETAIL
Date: April 02, 2002

Sheet No.
C-8

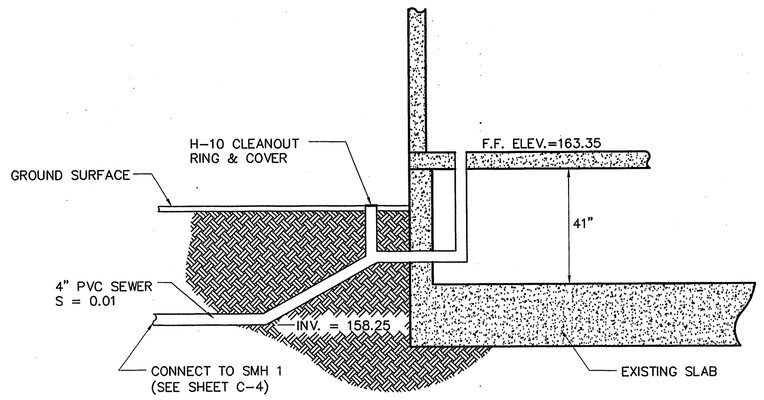

BUILDING No. 18 SEWER DETAIL

N.T.S.

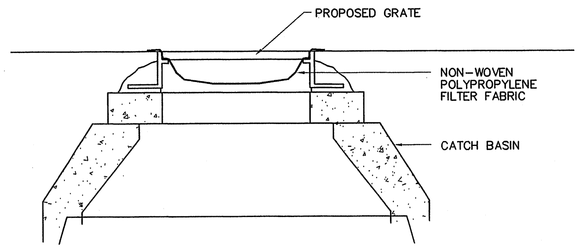

TEMPORARY CATCH BASIN FILTER

N.T.S.

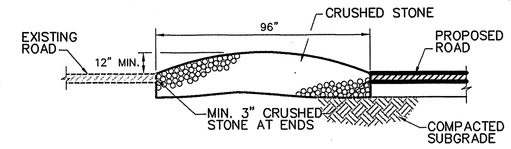

NOTE: THE PURPOSE OF THIS TEMPORARY BERM IS TO REMOVE MUD FROM THE TIRES OF VEHICLES LEAVING THE SITE DURING CONSTRUCTION.

TEMPORARY ENTRANCE BERM

N.T.S.

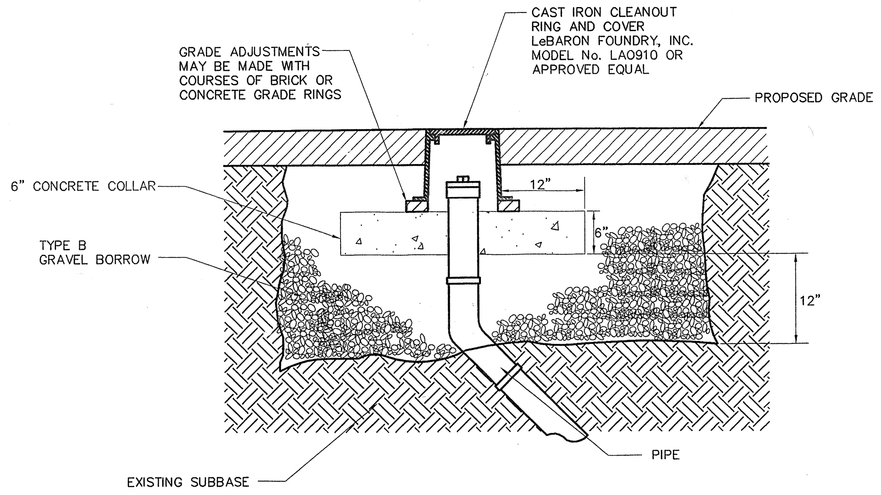

H-10 CLEANOUT RING AND COVER

SCALE: 1" = 1'

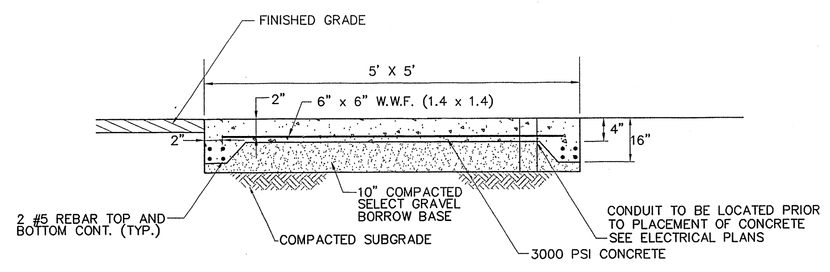

NOTE: CONSTRUCTION JOINTS ARE TO BE AT 5' INTERVALS

TRANSFORMER PAD

N.T.S.

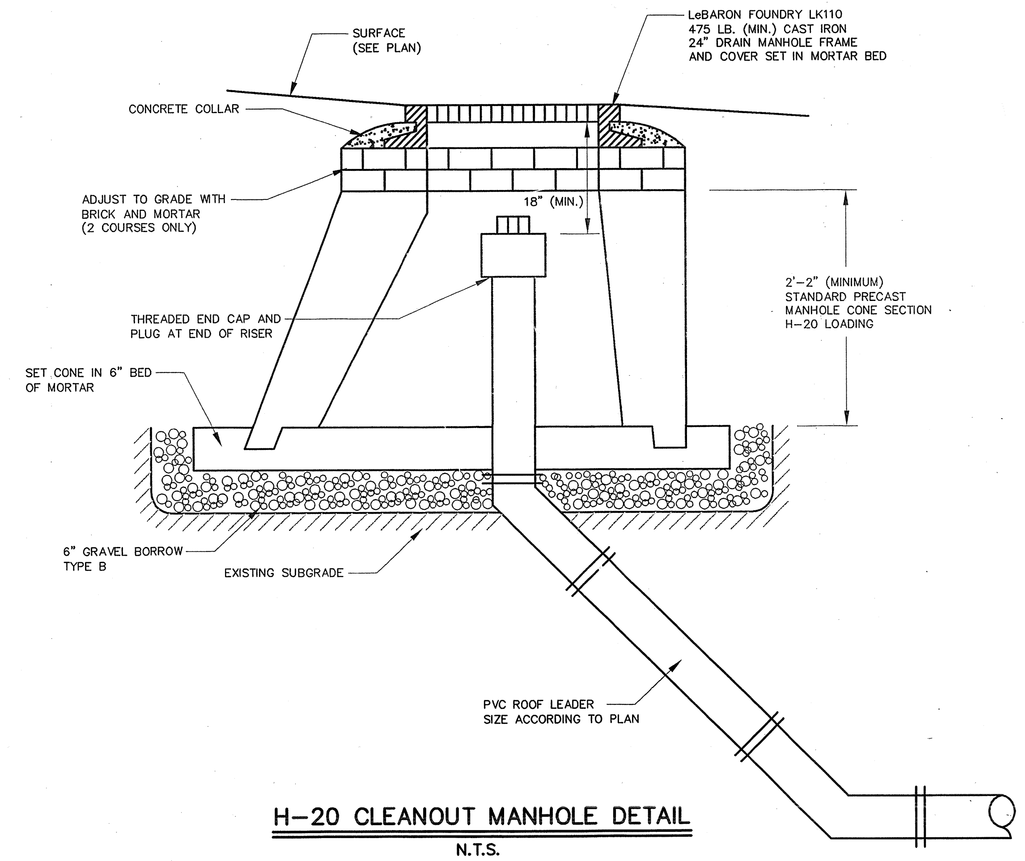

H-20 CLEANOUT MANHOLE DETAIL

N.T.S.

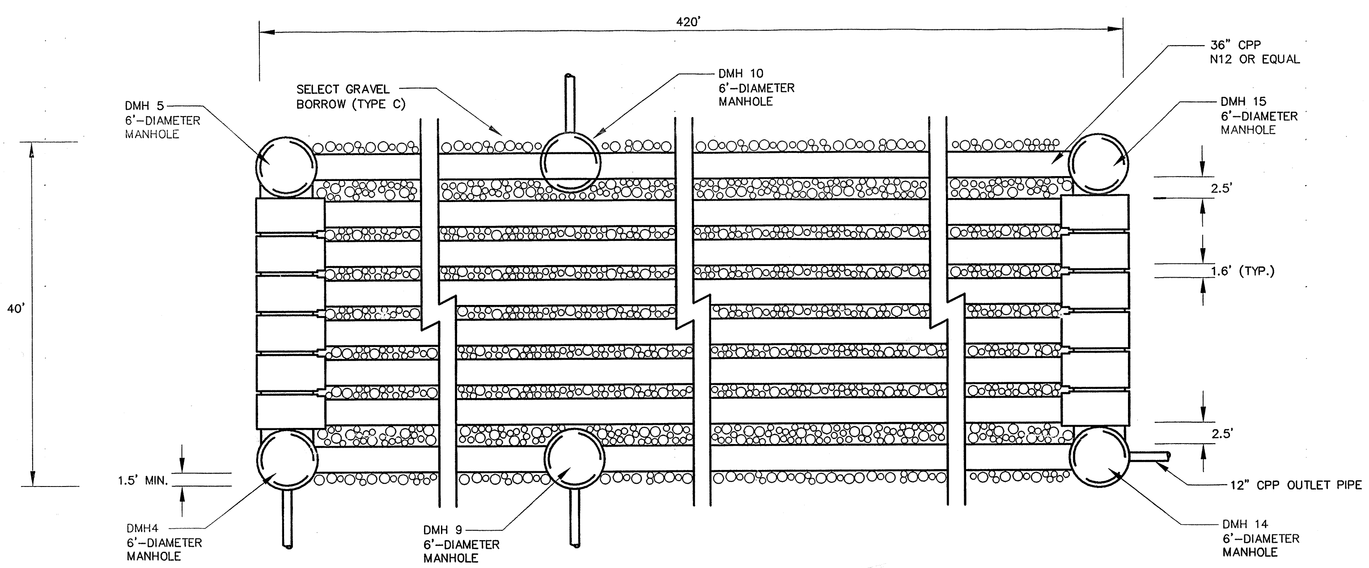

PLAN VIEW

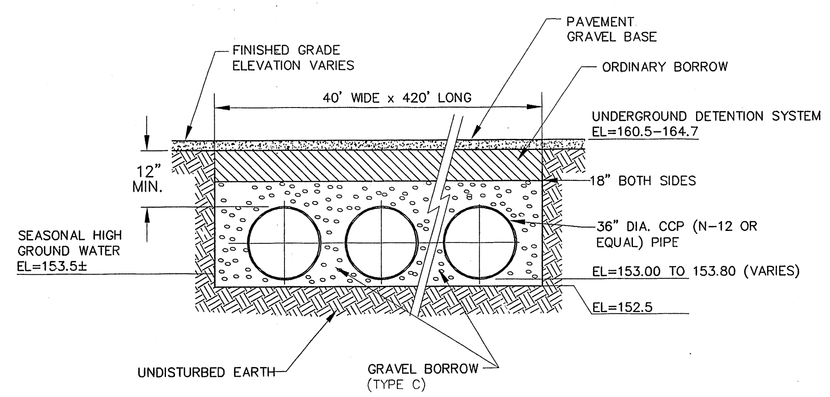

SECTION VIEW

UNDERGROUND DETENTION SYSTEM

N.T.S.

Framingham Planning Board Plan Endorsement

Date of Endorsement: 1/28/03

NOT FOR CONSTRUCTION

THESE PLANS WERE PREPARED FOR THE PURPOSE OF OBTAINING STATE AND LOCAL APPROVALS AND ARE NOT INTENDED TO BE USED AS CONSTRUCTION DOCUMENTS.

No.	Date	Description
01	07/08/2002	PARKING LOT DESIGN/NEW GARAGE LOCATION

Revisions

Drawn By	Designed By	Checked By	Approved By
CEF	CEF		

COMMONWEALTH OF MASSACHUSETTS CARLOS FERREIRA CIVIL No. 41423 REGISTERED PROFESSIONAL ENGINEER 7/23/02

CF ENGINEERING
33 Fenwick Street, Framingham, MA 01701
Tel: (508) 331-7201 Fax: (508) 405-1734

Project Title

Framingham Triangle
Triangle Realty Trust
Framingham, MA

Sheet Title

Construction Details

Scale: NOT TO SCALE
Job No.: FRAM_TRIAN
File Name: DETAIL
Date: April 02, 2002

Sheet No. C-9

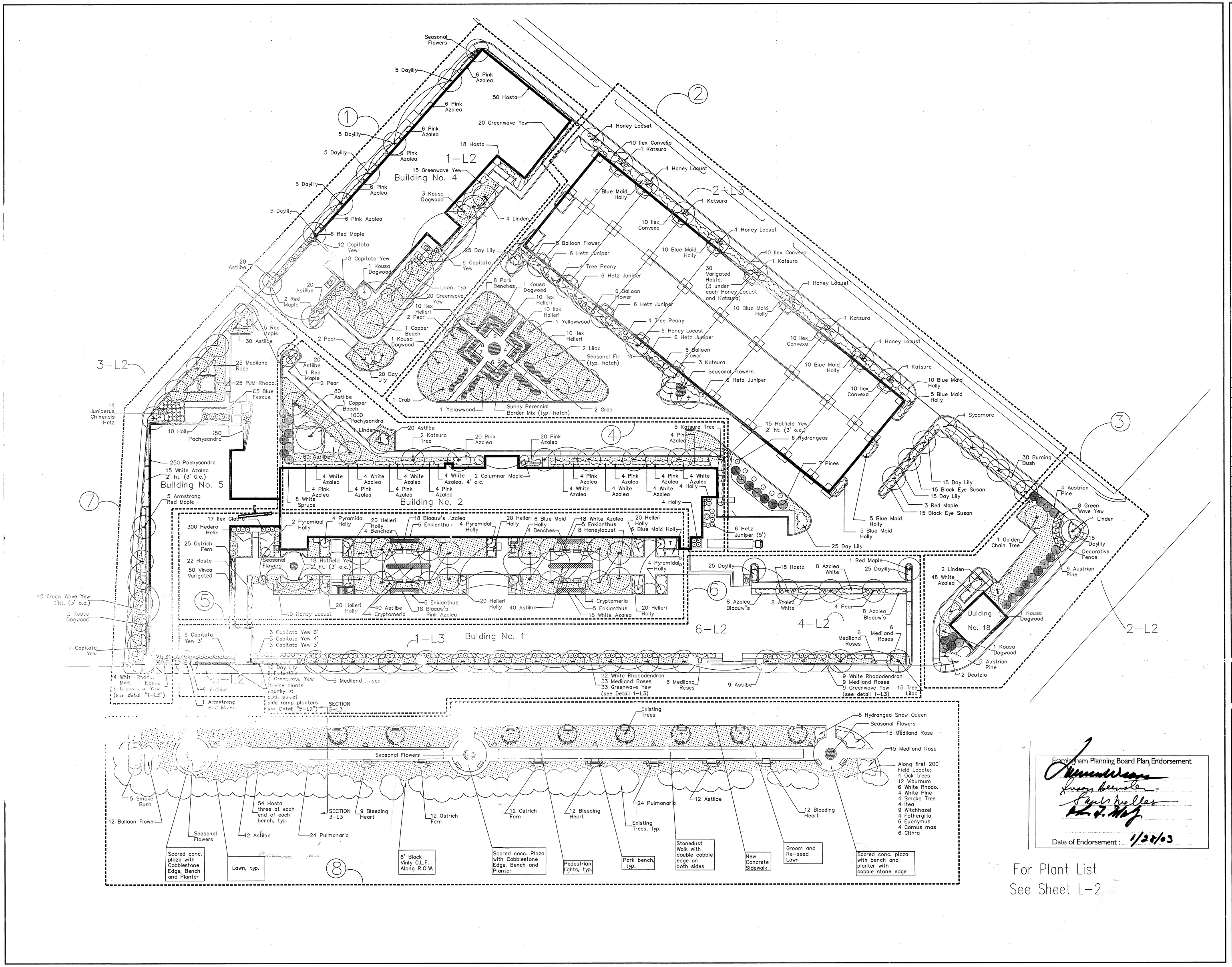

Framingham Planning Board Plan Endorsement

Date of Endorsement: 1/28/03

For Plant List
See Sheet L-2

LANDSCAPE PLAN
Dennison Triangle
Framingham Massachusetts

No.	Date	Description
1.	7/18/02	Revise Areas #1 & #2

REVISIONS

Framingham Planning Board Plan Endorsement

Date of Endorsement:

Cefalo Associates
Landscape Advisors
12 Mt. Vernon Street, Melrose, MA 02176
Tel: 781-662-2951 Fax: 781-662-2951

Framingham Triangle
Framingham MA

LANDSCAPE PLANTING PLAN

Scale: 1"=30'
Job No.: 9740.18
Name: DENNISON
Date: 7/24/00
Sheet No. L-1

9740.18

Dennison Triangle
Framingham, MA
PLANT QUANTITIES

(1) BUILDING 4

QTY.	PLANT NAME	SIZE
	TREES	
8	ACER RUBRUM' ARMSTRONG'	2–2.5"
4	CORNUS KOUSA	8'–10'
1	FAGUS S. 'PURPUREA PENDULA'	3"
2	PYRUS CALLERYANA ' ARISTOCRAT'	2–2.5"
4	TILIA CORDATA ' GREENSPIRE'	2–2.5"
	SHRUBS	
0	JUNIPERUS HETZII COLULMNARIS	6–7'
36	AZALEA BLAAUW'S PINK	2'
39	TAXUS CUSPIDATA ' CAPITATA'	5–6'
55	TAXUS CUSPIDATA ' GREENWAVE'	2'
	PERENNIALS	
68	HOSTA UNDULATA 'VARIGATA'	2 GAL
0	ROSA MEILPTA – MAUVE PINK	1 GAL
40	ASTILBE SIMPLICIFOLIA – PINK	2 GAL
45	HEMEROCALLIS 'HAPPY RETURNS'	2 GAL
	SOD –	SOD –
2492	SQ. FT. SOD	0
	IRRIGATION SYSTEM	IRRIGATION SYSTEM

(2) PARKING LOT

QTY.	PLANT NAME	SIZE
	TREES	2–2.5"
2	CORNUS KOUSA	2–2.5"
2	CLADRASTIS LUTEA	2–2.5"
2	SYRINGA RETICULATA	2–2.5"
2	PYRUS CALLERYANA ' ARISTOCRAT'	2–2.5"
3	MALUS SNOWDRIFT	2–2.5"
7	PINUS NIGRA	7–8'
3	ACER RUBRUM	2–2.5"
4	PLATANUS X ACERFOLIA	2–2.5"
8	CERCIDIPHYLLUM JAPONICUM	2–2.5"
11	GLEDITSIA TRICANTHOS 'INERMIS'	2–2.5"
	SHRUBS	SHRUBS
30	EUONYMUS ALATUS 'COMPACTA'	2–2.5'
50	ILEX CONVEXA	2–2.5'
40	ILEX HELLERI	2–2.5'
65	ILEX BLUE MAID	2–2.5'
30	JUNIPERUS CHINENSIS 'HETZ'	5'
6	HYDRANGEA MACRO 'NIKKO BLUE'	5 GAL.
15	TAXUS X MEDIA 'HATFIELD'	2–2.5'
	PERENNIALS	
80	HEMEROCALLIS 'STELLA D'ORO'	1–GAL
12	MONDARA ' JACOB CLINE RED'	1–GAL
30	RUDBECKIA F. GOLDSTRUM	1–GAL
12	MALVA FASTIGIATA MIXED	1–GAL
12	VERONICA 'BORDER BLUE'	1–GAL
17	PLATYCODON ' MARIESII'	1–GAL
12	PHLOX P. 'ROBERT POORE'	1–GAL
12	PAPAVER N.'WONDERLAND'	1–GAL
12	LIATRIS 'KOBOLD'	1–GAL
12	LEUCANTHEMUM 'SILVER PRINCESS'	1–GAL
12	IRIS CRESTATA 'ROYAL BLUE'	1–GAL
12	ECHINACEA 'BRAVADO'	1–GAL
12	ACHILLEA 'MOONSHINE'	1–GAL
12	STACHYS 'SUPERBA'	1–GAL
8	PEONIA 'TREE PEONY'	1–GAL
30	HOSTA U. VARIGATUS	1–GAL
	SOD	SOD
5935	SQ. FT. SOD	0
0	PAVING SQ. FT.	PAVING 0
	IRRIGATION	IRRIGATION

(3) HOUSE

QTY.	PLANT NAME	SIZE
	TREES	
18	PINUS NIGRA	7'–8'
3	TILIA CORDATA ' GREENSPIRE'	2"–2.5"
2	CORNUS KOUSA	2"
1	LABURNUM W. 'VOSSII' –GOLDEN CHAIN	8'–10'
	SHRUBS	
8	TAXUS CUSPIDATA ' GREENWAVE'	2'
48	AZALEA GIRARD'S WHITE	2'
12	DEUTZIA GRACILIS 'NIKKO'	2'
	PERENNIALS	
15	HEMERACALLIS 'STELLA D'ORO'	1 GAL

(4) BUILDING 2 PARKING LOT SIDE

QTY.	PLANT NAME	SIZE
	TREES	
7	CERCIDIPHYLLUM JAPONICUM	2"–2.5"
2	ACER PLATANOIDES 'COLUMNARE'	2"–2.5"
1	ACER RUBRUM' ARMSTRONG'	2"–2.5"
1	FAGUS S. 'PURPUREA PENDULA'	2"–2.5"
2	PYRUS CALLERYANA ' ARISTOCRAT'	2"–2.5"
1	TILIA CORDATA ' GREENSPIRE'	2"–2.5"
8	PICEA GLAUCA	7'–8'
	SHRUBS	
72	AZALEA BLAAUW'S PINK	2'
32	AZALEA GIRARD'S WHITE	2'
8	ILEX M. BLUE PRINCESS	3'
15	TAXUS c. HATFIELDII	2'
6	JUNIPERUS HETZII COLUMNARIS	5'
	PERENNIALS	
200	ASTILBE SIMPLICIFOLIA – MIXED	1 GAL
1000	PACHYSANDRA TERMINALIS	4" POT

(5) INNER COURTYARD

QTY.	PLANT NAME	SIZE
	TREES	
16	GLEDITSIA TRIACANTHOS	2"–2.5"
8	CRYPTOMERIA JAPONICA 'ANGELICA'	8'
	SHRUBS	
14	ILEX OPACA 'GOLDIE' –PYRAMIDAL	4'
120	ILEX CRENATA 'HELLERI'	2'
20	ENKIANTHUS CAPMANULATUS	4'
36	AZALEA GIRARD'S WHITE	2'
36	AZALEA BLAAUW'S PINK	2'
18	TAXUS C. HATSFIELDII	2'
12	ILEX M. BLUE PRINCESS	3'
17	ILEX GLABRA 'COMPACTA'	2' – 2.5'
	PERENNIALS	
300	HEDRA HELIX	4" POT
25	MATTEUCCIA STRUTHIOPTERIS	1 GAL
50	VINCA MINOR 'RALPH SHUGERT'	4" POT
22	HOSTA UNDULATA 'VARIGATA'	1 GAL.
80	ASILBE SIMPLICIFOLIA–MIXED	1 GAL

(6) BUILDING 1 FRONT & REAR CORNER

QTY.	PLANT NAME	SIZE
	TREES	
2	ACER RUBRUM' ARMSTRONG'	2"–2.5"
15	SYRINGA RETICULATA 'IVORY SILK	2"–2.5"
	SHRUBS	
16	AZALEA GIRARD'S WHITE	2'
16	AZALEA BLAAUW'S PINK	2'
12	TAXUS CUSPITATA 'CAPITATA'	3'
3	TAXUS CUSPITATA 'CAPITATA'	4'
3	TAXUS CUSPITATA 'CAPITATA'	6'
31	RHODODENDRON BOULE DE NEIGE	2.5'
46	TAXUS CUSPIDATA ' GREENWAVE'	2'
6	POTENTILLA F. 'TANGERINE'	15"–18"
	PERENNIALS	
65	ROSA MEILPTA – MAUVE PINK	1 GAL.
62	HEMEROCALLIS STELLA D'ORO	1 GAL.
18	HOSTA UNDULATA VARIGATA	1 GAL
28	ASTILBE SIMPLICIFOLIA – MIXED	1 GAL.

(7) BUILDING 5

QTY.	PLANT NAME	SIZE
	TREES	
10	ACER RUBRUM' ARMSTRONG'	2"–2.5"
2	CORNUS KOUSA	2"
	SHRUBS	
10	ILEX M. BLUE PRINCESS	3'
7	TAXUS CUSPIDATA 'CAPITATA'	5'
4	RHODODENDRON BOULE DE NEIGE	2.5'
64	TAXUS CUSPIDATA ' GREENWAVE'	2'
14	JUNIPERUS HETZII COLULMNARIS	6'–7'
15	AZALEA GIRARD'S WHITE	2'
25	RHODODENDRON P.J.M.	2'
	PERENNIALS	
31	ROSA MEILPTA – MAUVE PINK	1 GAL
30	ASTILBE SIMPLICIFOLIA – MIXED	1 GAL
400	PACHYSANDRA TERMINALIS	4" POT
85	FESTUCA CINEREA 'ELIJAH BLUE'	1 GAL

(8) HOWARD STREET

QTY.	PLANT NAME	SIZE
	TREES	
4	QUERCUS RUBRA	2"–2.5"
1	ACER PLATANOIDES	5"
4	PINUS STROBUS	8'–10'
	SHRUBS	
3	VIBURNUM DENTATUM	3' –4'
3	VIBURNUM P. TOMENTOSUM	3' –4'
3	VIBURNUM RHYTIDOPHYLLOIDES	3' –4'
3	VIBURNUM BURKWOODI	3' –4'
6	RHODODENDRON CAT. ALBUM	3'
5	HYDRANGEA Q. 'SNOW QUEEN'	3'
9	COTINUS COGGYRIA 'ROYAL PURPLE'	5'–6'
*4	ITEA VIRGINICA 'HENERY'S GARNET'	3'
*9	HAMAMELIS I. 'ARNOLD PROMISE'	3'
*4	FOTHERGILLA MAJOR 'MOUNT AIRY'	3'
*5	EUONYMUS ALATUS COMPACTA	3'
*4	CORNUS MAS 'GOLDEN CHERRY'	4'
*6	CLETHARA ALNIFOLIA	3'
	PERENNIALS	
30	ROSA MEILPTA – MAUVE PINK	1 GAL.
24	ASTILBE SIMPLICIFOLIA – MIXED	1 GAL.
54	HOSTA UNDULATA 'VAIRGIATA'	1 GAL.
48	PULMONARIA S. 'MRS. MOON	1 GAL.
24	MATTEUCCIA STRUTHIOPTERIS	1 GAL
33	DICENTRA SPECTABLIS	1 GAL.
12	PLATYCODON GRANDIFLORUS	1 GAL

(* INDICATES FIELD LOCATE)

Framingham Planning Board Plan Endorsement

Date of Endorsement: 1/28/03

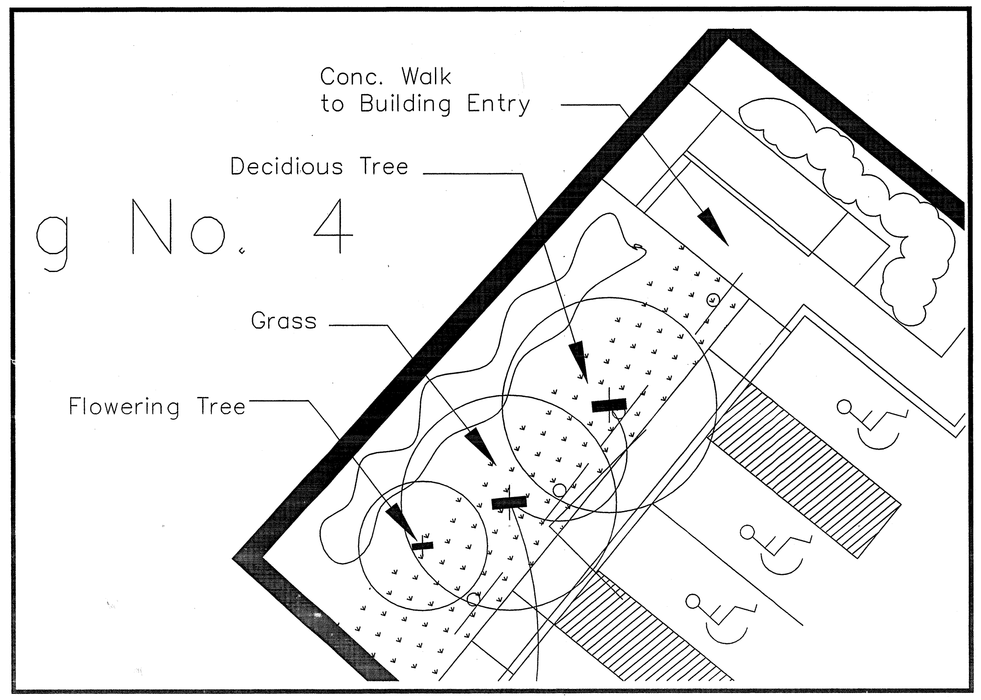

1–L2 BUILDING #4, PARKING LOT ENTRY

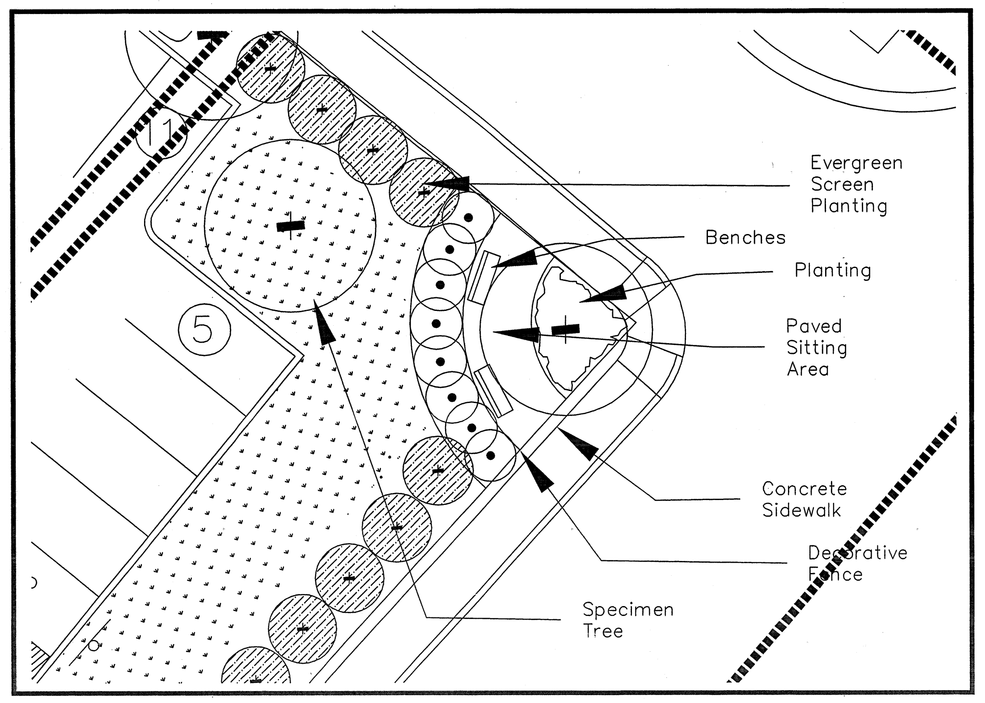

2–L2 CORNER OF CLINTON & BISHOP

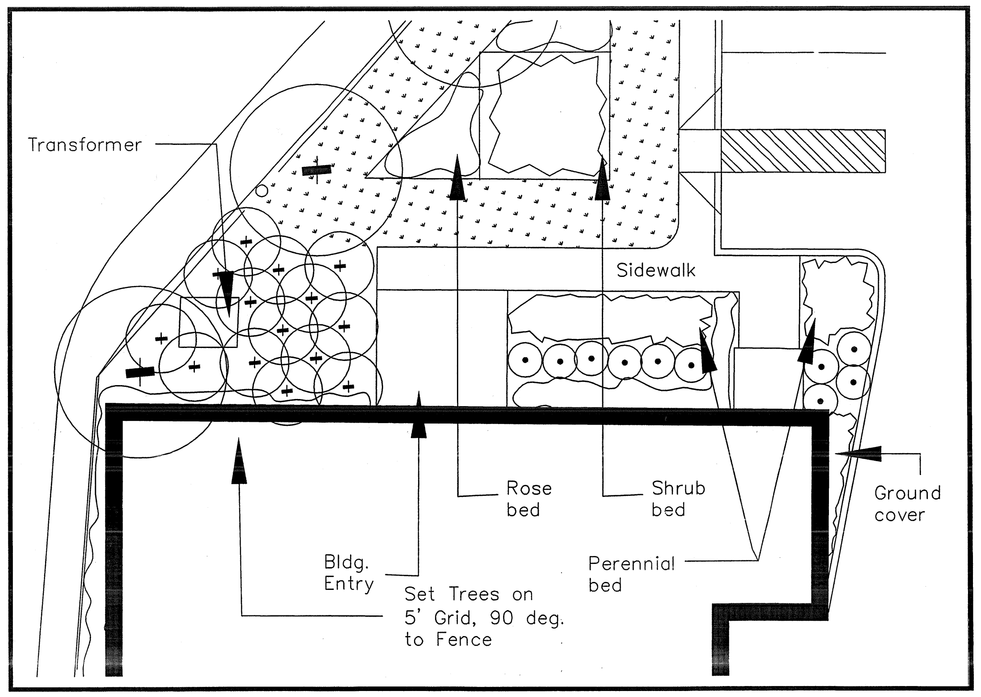

3–L2 BUILDING #5, PARKING LOT ENTRY

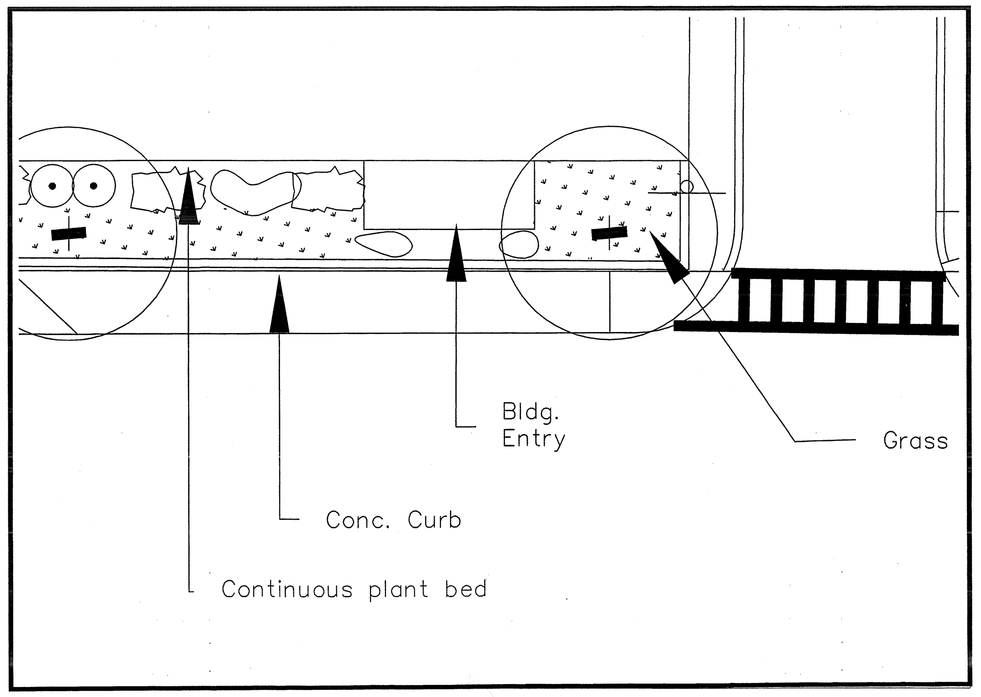

4.–L2 HOWARD STREET, EAST ENTRY

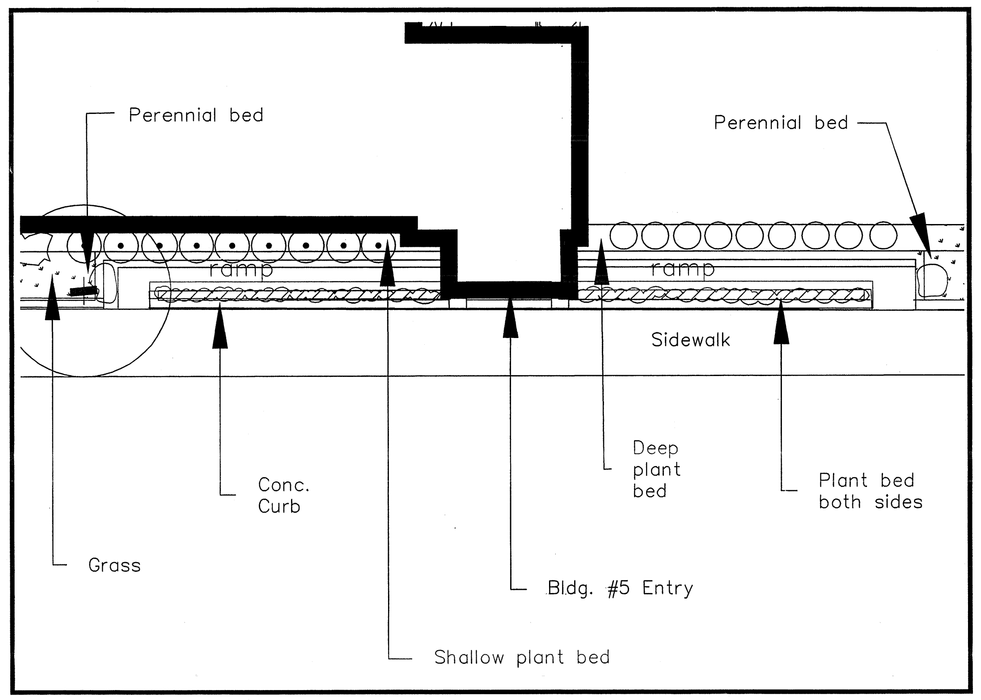

5–L2 HOWARD STREET, WEST ENTRY

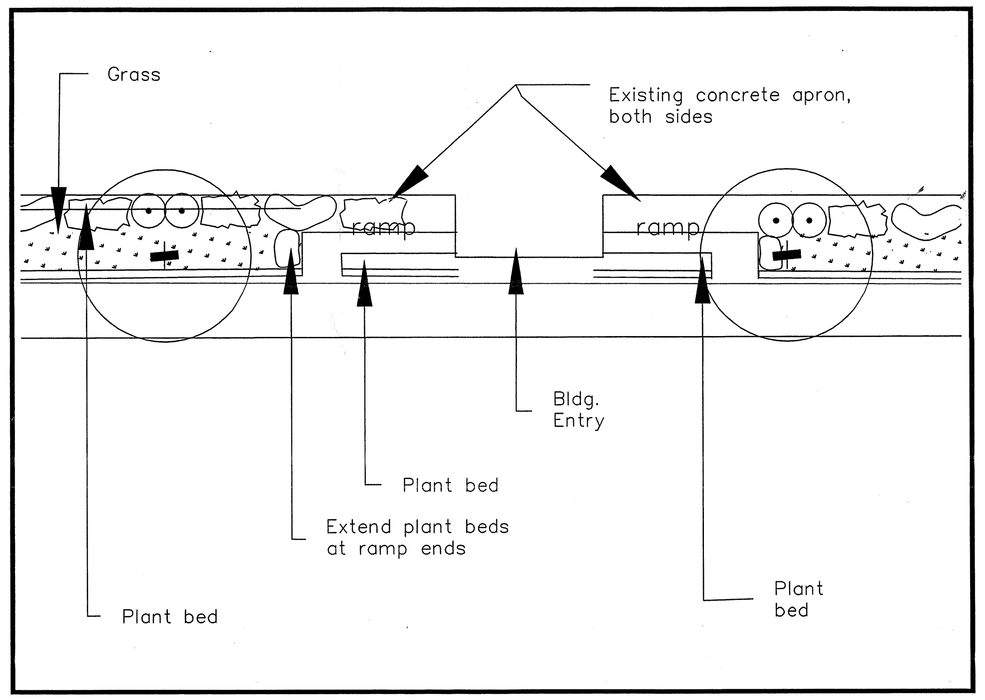

6–L2 HOWARD STREET, CENTER ENTRY

LANDSCAPE PLAN

Dennison Triangle
Framingham Massachusetts

No.	Date	Description
1.	7/18/02	Revise Areas #1 & #2

Revisions

Framingham Planning Board Plan Endorsement

Date of Endorsement:

Cefalo Associates
Landscape Advisors
12 Mt.Vernon Street, Milford, MA 01776
Tel: 781-662-2951 Fax: 781-662-2951

Framingham Triangle
Framingham MA

LANDSCAPE
ENLARGED AREA
& PLANT LIST

Scale: NA
Job No.: 9740.18
File Name: DENNISON
Date: 7/24/00
Sheet No. L–2

9740.18

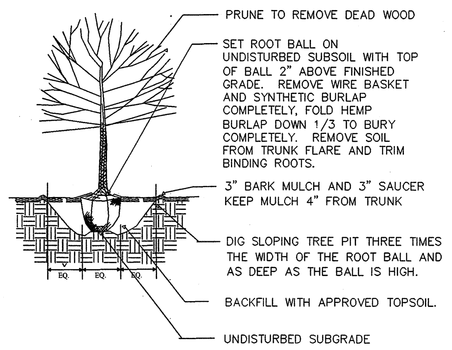

DECIDUOUS TREE PLANTING

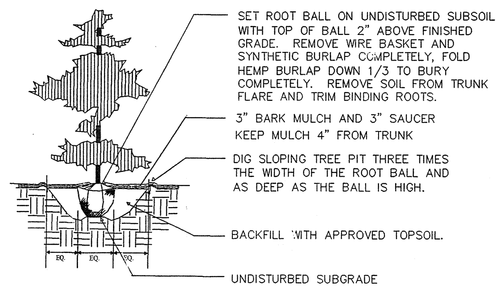

EVERGREEN TREE PLANTING

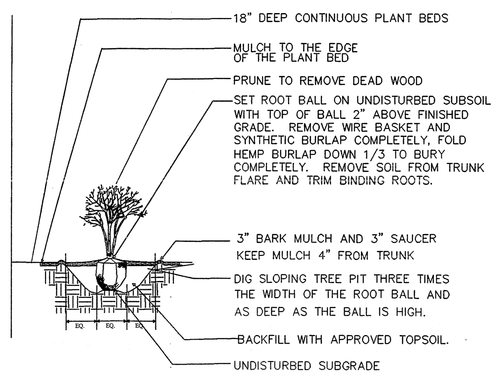

SHRUB PLANTING

PLANTING NOTES

1. PLANTING SEASON: Out of season planting shall be done only with prior approval of the Owner and does not relieve the Contractor from his guarantee. The contractor shall take whatever maintenance procedures that are necesary, at no extra cost to compensate for out of season planting.

2. INSPECTIONS: All plant materials shall be inspected by the Landscape Architect at the nursery and upon delivery to the site.

3. DELIVERY IN CLOSED TRUCKS: All plant materials in leaf shall be covereed with tarps to prevent drying of the leaves. Root balls must be kept damp at all times – from time of purchase to completed installation.

4. ALL PLANT LOCATIONS ARE TO BE APPROVED by the Landscape Architect. Stake locations for all trees and place shrubs as shown on the plan for approval prior to planting. Property line screen planting is to be located for maximun effectiveness.

5. PLANT PITS shall be THREE ROOT BALL DIAMETERS IN WIDTH and no deeper than the plant ball.

6. REMOVE SOIL from the top of the root ball down to the trunk flare by loosening the burlap. Dig plant pit such that the root flare is one (1") to two (2") inches above finished grade.

7. FILL HOLE WITH WATER if poor drainage is suspected. If tree pit does not drain within 24 hours an alternate plant location shall be selected.

8. SET PLANT IN THE HOLE, cut away all visible rope and burlap. Cut away top twelve (12") inches of wire baskets.

9. BACKFILL HOLE with with approved loam. Existing soil may be used and amended provided that the planting soil meets the standards for new loam. When backfilling is half complete, fill pit with water and allow to drain to remove air pockets. Complete backfilling, leaving root flare exposed.

10. WATER–HOLDING SAUCER shall be built up around the plant pit. Flood with water for five (5) minutes immediately after planting.

11. WATER PLANTS once a day for the first week and once a week for the first planting season. Water at the rate of five (5) gallons per shrub and ten (10) gallons per tree.

12. MULCH areas around proposed trees and shrubs. All plant beds shall be treated with three (3") inches of shredded bark mulch. Cut neat bed edge and fully remove all grass and weeds prior to mulch application. DO NOT MULCH AGAINST TRUNKS AND STEMS OF PLANTS MATERIALS.

13. ALL AREAS disturbed during construction are to be loamed and either seeded or mulched as directed by the owner.

14. PURCHASE PLANTS prior to the start of construction to insure availability of materials at time of planting. Tag and stockpile materials at nursery until time of planting.

15. PLANT SUBSTITUTES shall be approved by the Landcape Architect prior to purchase and/or delivery.

16. CONFORM ALL PLANT MATERIALS to 'American Association of Nurseryman Standard for Nursery Stock' ANSI z60 1–1990.

17. CONFORM ALL PLANTING AND SOIL SPECIFICATINS to Massachussetts Highway Department 'Standard Specifications for Highways and Bridges' latest edition.

18. IRRIGATION: The Owner shall provide an automatic irrigation system for all planting and lawn areas.

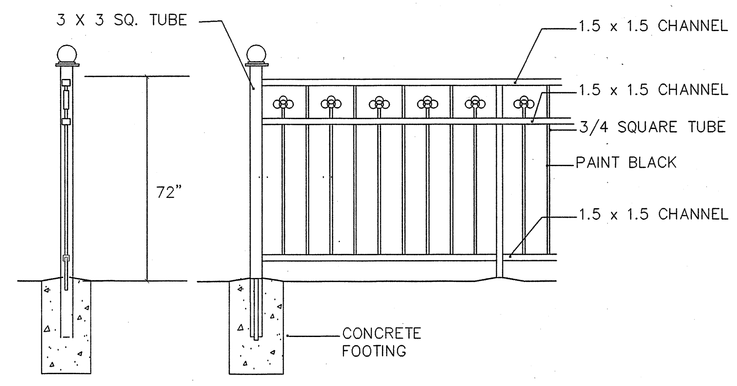

5–L3 FENCE (selection by owner)

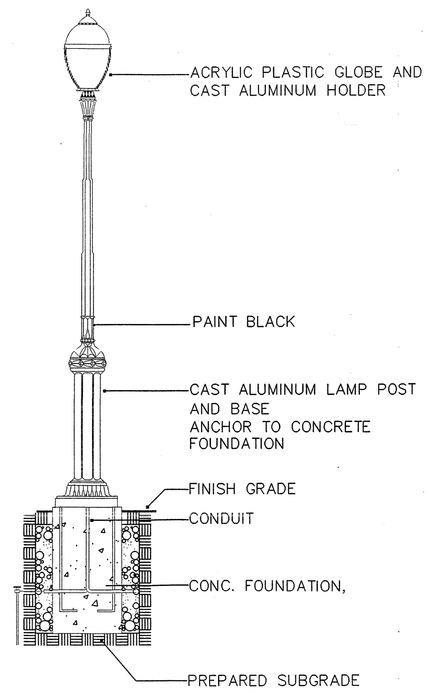

4–L3 LIGHT (selection by owner)

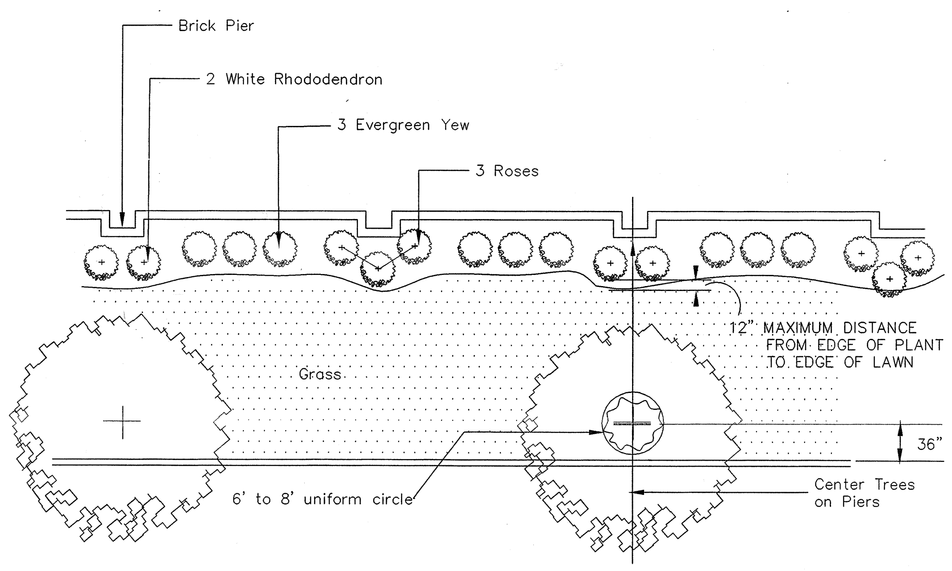

1–L3 HOWARD STREET PLANTING

not to scale

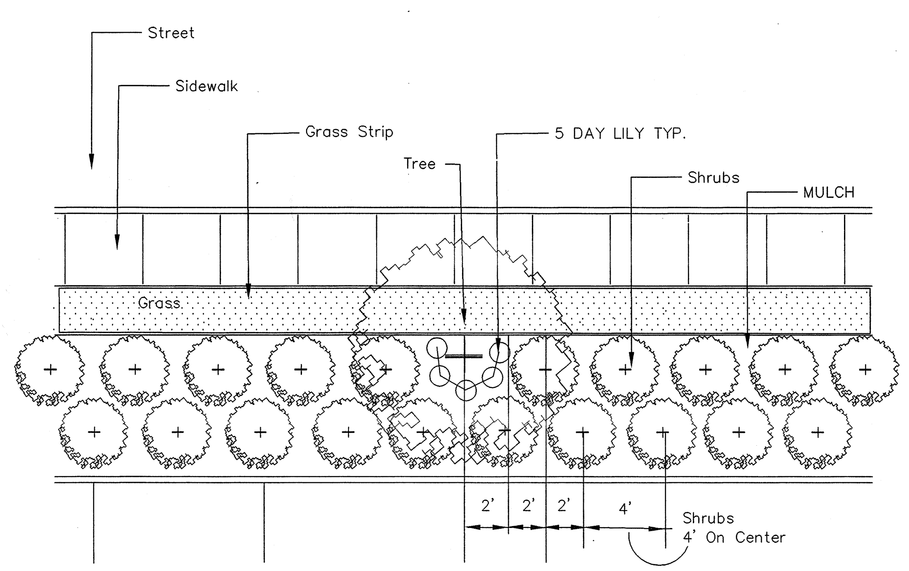

2–L3 CLINTON STREET PLANTING

not to scale

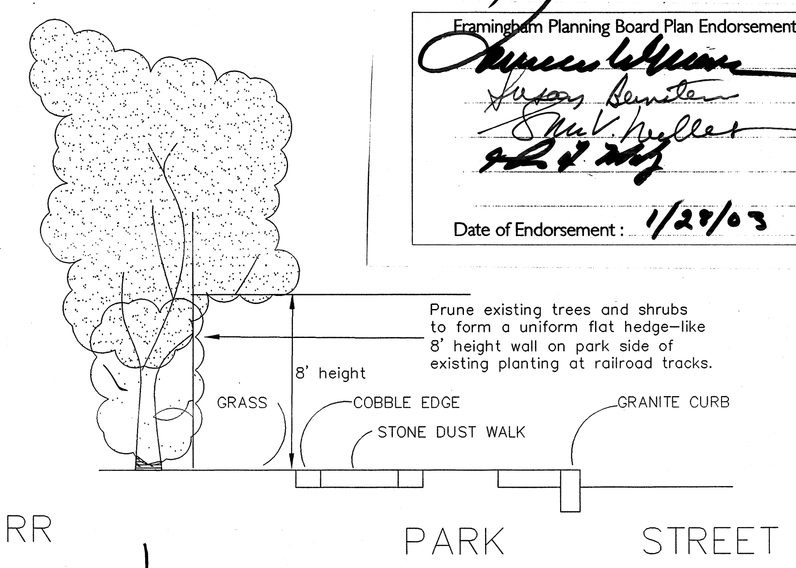

3–L3 PRUNING SECTION

not to scale

Framingham Planning Board Plan Endorsement

Date of Endorsement: 1/27/03

LANDSCAPE PLAN

Dennison Triangle
Framingham Massachusetts

No.	Date	Description
1.	7/18/02	Revise Areas #1 & #2

Revisions

Framingham Planning Board Plan Endorsement

Date of Endorsement: _____

Cefalo Associates
Landscape Advisors
12 Mt.Vernon Street, Melrose, MA 02176
Tel: 781-662-2951 Fax: 781-662-2951

Framingham Triangle
Framingham, MA

LANDSCAPE DETAIL PLAN

Scale: VARIES
Job No.: 9740.18
Name: DENNISON
Date: 7/24/00

Sheet No. L–3

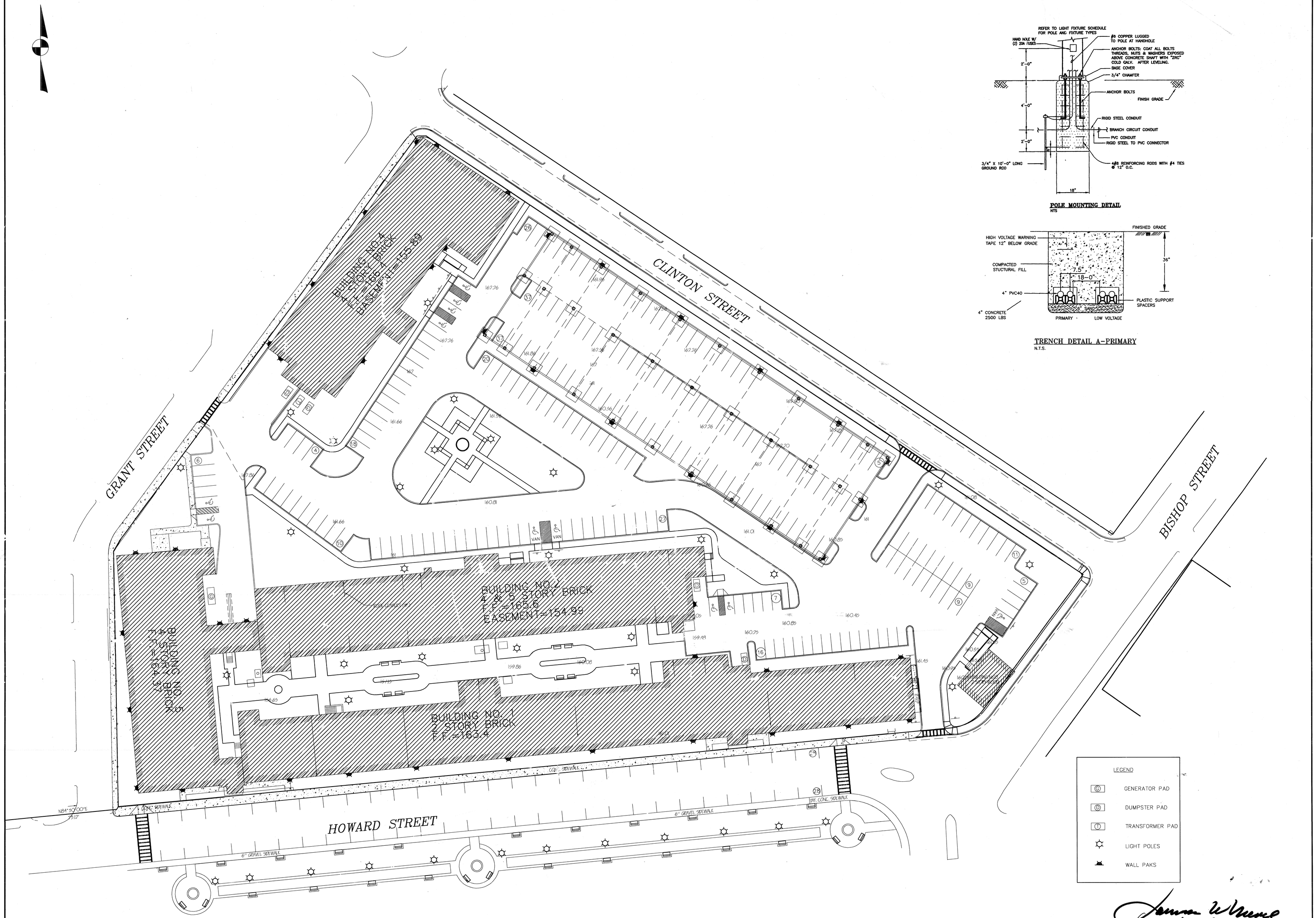

POLE MOUNTING DETAIL
NTS

TRENCH DETAIL A-PRIMARY
N.T.S.

1/28/03

No.	Date	Description
01	07/08/2002	PARKING LOT DESIGN/NEW GARAGE LOCATION

Revisions

Drawn By	Designed By	Checked By	Approved By
CEF	CEF		

CF ENGINEERING

33 Fenwick Street, Framingham, MA 01701
Tel: (508) 331-7261 Fax: (508) 405-1194

Project Title

Framingham Triangle
Triangle Realty Trust
Framingham, MA

Sheet Title

Site Lighting Plan

Scale: 1"=30'
Job No.:
File Name:
Date: April 2, 2002

Sheet No.
SL-1