NOTES:

1. SUBJECT PARCEL IS SHOWN AS ASSESSORS SHEET 92, BLOCK 194, LOTS 3, 5, AND 14.
   RECORD TITLE FROM BOOK 60629, PAGE 379, BOOK 63128, PAGE 51, AND BOOK 60629, PAGE 376, RESPECTIVELY.
2. THIS PLAN IS THE RESULT OF AN ON-GROUND SURVEY PERFORMED BY METROWEST ENGINEERING, INC. UTILITY LOCATIONS ARE BASED ON FIELD OBSERVATIONS, AVAILABLE RECORDS AND INFORMATION. METROWEST ENGINEERING, INC. DOES NOT WARRANT LOCATION, CHARACTER NOR ELEVATIONS OF ALL UNDERGROUND UTILITIES NOR THE LOCATION NOR CHARACTER OF SURFACE IMPROVEMENTS THE OBSERVATION OF WHICH WAS OBSCURED AT THE TIME OF THE SURVEY. THERE WAS 12"± OF SNOW COVER ON THE GROUND DURING THE SURVEY.
3. THE PROPERTY DESCRIBED ON THIS EXISTING CONDITIONS SURVEY, BUT NOT THE BUILDINGS THEREON, DOES LIE PARTIALLY WITHIN A SPECIAL FLOOD HAZARD AREA AS DEFINED BY THE FEDERAL EMERGENCY MANAGEMENT AGENCY; THE PROPERTY LIES WITHIN ZONES "X"(AREA OF 0.2% ANNUAL CHANCE FLOOD) & "AE" OF THE FLOOD INSURANCE RATE MAP IDENTIFIED AS COMMUNITY PANEL NO.25017C 0519E, BEARING AN EFFECTIVE DATE OF JUNE 4, 2010.

Framingham Salvage CO.
METAL RECYCLING

PROPOSED BUILDING SITE PLAN SET

FRAMINGHAM PLANNING BOARD
SITE PLAN REVIEW UNDER SECTION IV.2.D

DATE:

THE ENDORSEMENT OF THE PLANNING BOARD SHOULD NOT BE CONSTRUED TO BE A DETERMINATION OF CONFORMANCE WITH ZONING REGULATIONS.

ZONING DISTRICT: BUSINESS-B

DESCRIPTION	REQUIRED BUSINESS ZONE	EXISTING	PROPOSED
LOT AREA	6,000 SQ. FT. (MIN.)	70,030 SQ. FT.	70,030 SQ. FT.
LOT FRONTAGE	50 FT. (MIN.)	303.44 FT.	303.44 FT.
FRONT YARD SETBACK	25 FT. (MIN.)	66.6 FT.	39.5 FT.
SIDE YARD SETBACK	15 FT. (MIN.)	22.1 FT.	16.0 FT.
REAR YARD SETBACK	15 FT. (MIN.)	N.A.	N.A.
MAX BUILDING HEIGHT	80 FT. (6 STORIES)	22± FT.	35 FT.
FLOOR AREA RATIO	0.32 (MAX.)	0.040	0.198±
MAX. LOT COVERAGE	35%	0.040	0.164
BUILDING AREA	N/A	2,811 SQ. FT.	11,461 SQ. FT.
OTHER IMPERVIOUS SURFACES	N/A	14,947 SQ. FT.	11,842 SQ. FT.
TOTAL IMPERVIOUS AREA	N/A	17,758 SQ. FT.	23,303 SQ. FT.
PARKING	N/A	0 SPACES	8 SPACES
HANDICAP PARKING	1 SPACE	0 SPACES	1 SPACE
LANDSCAPED OPEN SPACE SURFACE RATIO	N/A	0.049	0.031
UPLAND AREA	6,000 SQ. FT. (MIN.)	70,030 SQ. FT.	70,030 SQ. FT.

* – ZONING REQUIREMENTS FOR NON-RESIDENTIAL USE

PARKING REQUIREMENTS

EXISTING PARKING

PARKING REQUIREMENT	EXISTING CONDITION	TOTAL
1 SPACE PER 800 S.F. OF GROSS FLOOR AREA	2,811 S.F.	4
1 SPACE PER 1 EMPLOYEE	10 EMPLOYEES	10
TOTAL NUMBER OF REQUIRED PARKING SPACES		10
NUMBER OF EXISTING PARKING SPACES		0

ZONING BYLAW SECTION IV.B.1 REQUIRES THE GREATER OF THE FOLLOWING PARKING REQUIREMENTS FOR INDUSTRIAL USE:
1 SPACE PER 800 S.F. OF FLOOR AREA OR 1 SPACE PER EMPLOYEE

PROPOSED PARKING

PARKING REQUIREMENT	EXISTING CONDITION	TOTAL
1 SPACE PER 800 S.F. OF GROSS FLOOR AREA	13,860 S.F.	18
1 SPACE PER 1 EMPLOYEE	10 EMPLOYEES	10
TOTAL NUMBER OF REQUIRED PARKING SPACES		18
NUMBER OF PROPOSED EXTERIOR PARKING SPACES		8

ZONING BYLAW SECTION IV.B.1 REQUIRES THE GREATER OF THE FOLLOWING PARKING REQUIREMENTS FOR INDUSTRIAL USE:
1 SPACE PER 800 S.F. OF FLOOR AREA OR 1 SPACE PER EMPLOYEE

BUILDING FOOTPRINT AND GROSS FLOOR AREA

BUILDING	BUILDING FOOTPRINT	GROSS FLOOR AREA
EXISTING BUILDINGS	2,811 S.F.	2,811± S.F.
PROPOSED BUILDINGS	11,461 S.F.	13,860± S.F.

REVISIONS

DATE	REVISION

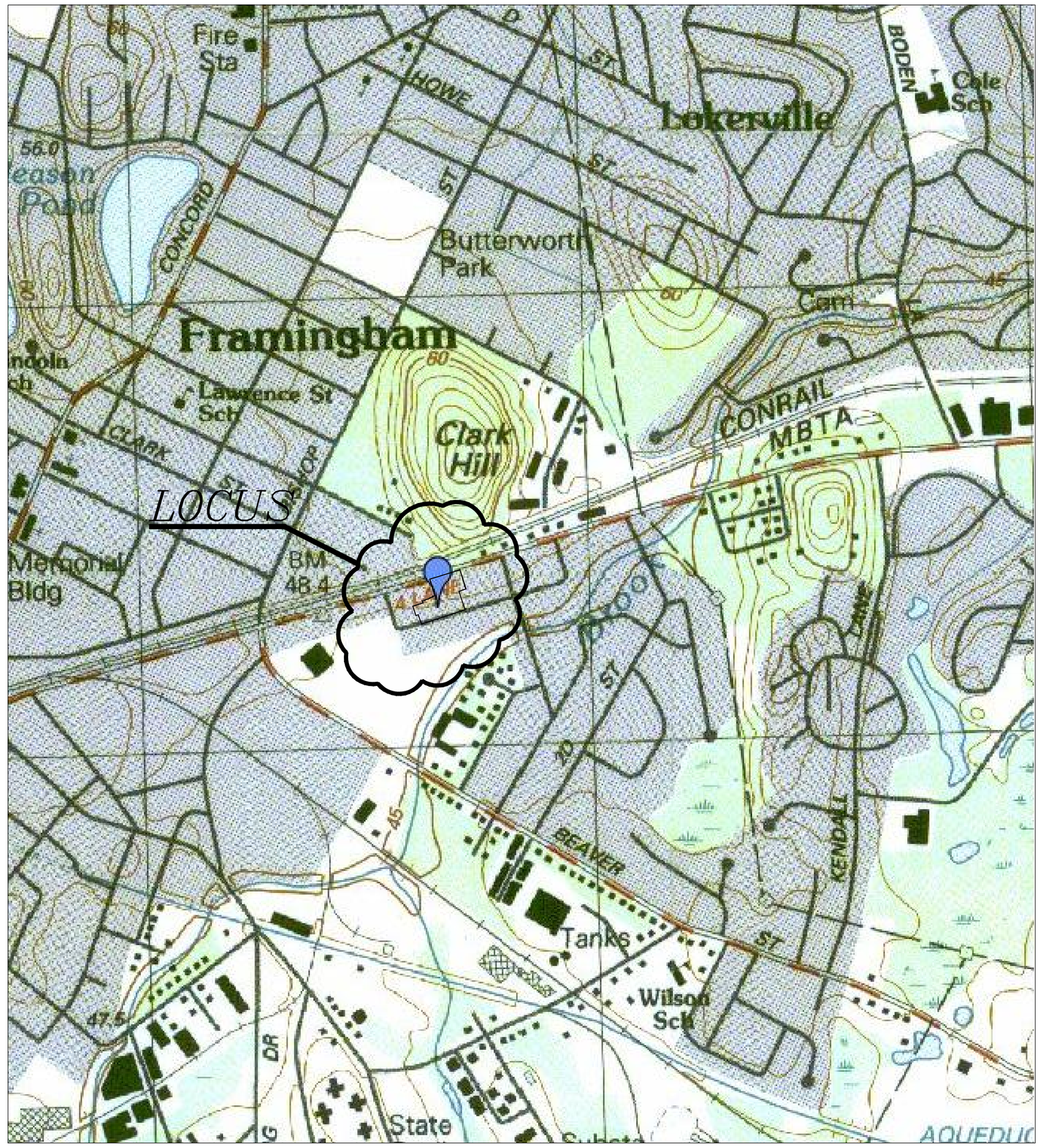

ZONING TABLE
B ZONE (BUSINESS)

	RESIDENTIAL	NON-RESIDENTIAL
AREA	8,000 S.F.	6,000 S.F.
FRONTAGE	65 FEET	50 FEET
SETBACKS: FRONT YARD	30+ FEET	25 FEET
SIDE YARD	10 FEET	15 FEET
FLOOR AREA RATIO	–	0.32
BUILDING HEIGHT	40 FEET/3 STORIES	80 FEET/6 STORY
OPEN SPACE	30% MINIMUM	20%
LOT COVERAGE	35% MAXIMUM	–

ZONING TABLE
M ZONE (GENERAL MANUFACTURING)

	RESIDENTIAL	NON-RESIDENTIAL
AREA	8,000 S.F.	6,000 S.F.
FRONTAGE	65 FEET	50 FEET
SETBACKS: FRONT YARD	30+ FEET	25 FEET
SIDE YARD	10 FEET	15 FEET
FLOOR AREA RATIO	–	0.32
BUILDING HEIGHT	40 FEET/3 STORIES	80 FEET/6 STORY
OPEN SPACE	30% MINIMUM	20%
LOT COVERAGE	35% MAXIMUM	–

SHEET INDEX

SHEET 1—COVER SHEET
SHEET 2—EXISTING CONDITIONS PLAN
SHEET 3—EROSION AND SEDIMENT CONTROL PLAN
SHEET 4—PROPOSED LAYOUT PLAN
SHEET 5—PROPOSED GRADING PLAN
SHEET 6—PROPOSED SITE PLAN
SHEET 7—LOCUS PLAN
SHEET 8—DETAIL PLAN

FRAMINGHAM SALVAGE CO.

COVER SHEET
#120 WAVERLEY STREET
IN
FRAMINGHAM, MASS

PREPARED FOR:
APPLEBAUM REALTY COMPANY, LLC
120 WAVERLY STREET
FRAMINGHAM, MA 01702

PROPERTY OF:
APPLEBAUM REALTY COMPANY, LLC
120 WAVERLY STREET
FRAMINGHAM, MA 01702

ENGINEERS & SURVEYORS:
MWE
METROWEST ENGINEERING, INC.
75 FRANKLIN STREET
FRAMINGHAM, MA 01702
TELE.: (508)626-0063
EMAIL: INFO@MWENGINEERING.COM

SHEET 1 OF 8		DATE: JULY 14, 2014
CALC'D BY: PHA/AEH	FIELD BK: 610	CAD FILE: P_SITE_PLANS_MAA1.dwg
DRAFTER: MAA/BTN	PROJECT: FRM_WAV1	DWG FILE: SP071414.dwg

SP071414

ZONING TABLE
B ZONE (BUSINESS)

	RESIDENTIAL	NON-RESIDENTIAL
AREA	8,000 S.F.	6,000 S.F.
FRONTAGE	65 FEET	50 FEET
SETBACKS:		
FRONT YARD	30+ FEET	25 FEET
SIDE YARD	10 FEET	15 FEET
FLOOR AREA RATIO	–	0.32
BUILDING HEIGHT	40 FEET/3 STORIES	80 FEET/6 STORY
OPEN SPACE	30% MINIMUM	20%
LOT COVERAGE	35% MAXIMUM	–

ZONING TABLE
M ZONE (GENERAL MANUFACTURING)

	RESIDENTIAL	NON-RESIDENTIAL
AREA	8,000 S.F.	6,000 S.F.
FRONTAGE	65 FEET	50 FEET
SETBACKS:		
FRONT YARD	30+ FEET	25 FEET
SIDE YARD	10 FEET	15 FEET
FLOOR AREA RATIO	–	0.32
BUILDING HEIGHT	40 FEET/3 STORIES	80 FEET/6 STORY
OPEN SPACE	30% MINIMUM	20%
LOT COVERAGE	35% MAXIMUM	–

TREE LEGEND

CODE	DESCRIPTION
RC#	RED CEDAR
RM#	RED MAPLE
WW#	WILLOW
NM#	NORWAY MAPLE
AP#	APPLE
CAT#	CATALPA
BOX#	BOX ELDER
QA#	QUAKING ASPEN
BW#	BASSWOOD

DETAIL: TREE LOCATION; RM14; TREE CODE; TREE DIAMETER

LEGEND

- BERM
- DRAIN CATCH BASIN
- DRAIN LINE
- DRAIN MANHOLE
- C.P. CONCRETE PAD
- FENCE
- CURB
- METAL FENCE POST
- HYDRANT
- MONITORING WELL
- PAVEMENT EDGE
- SEWER LINE
- SIGN
- SEWER MANHOLE
- TELEPHONE MANHOLE
- OHW OVERHEAD WIRE
- UTILITY POLE
- WATER GATE
- WATER LINE
- C.S. CONCRETE STEPS
- G.M. GAS METER
- SEWER LINE
- SEWER MANHOLE
- TELEPHONE MANHOLE
- VCC VERTICAL CONCRETE CURB
- # PARKING SPACES

PL. #898 OF 1980

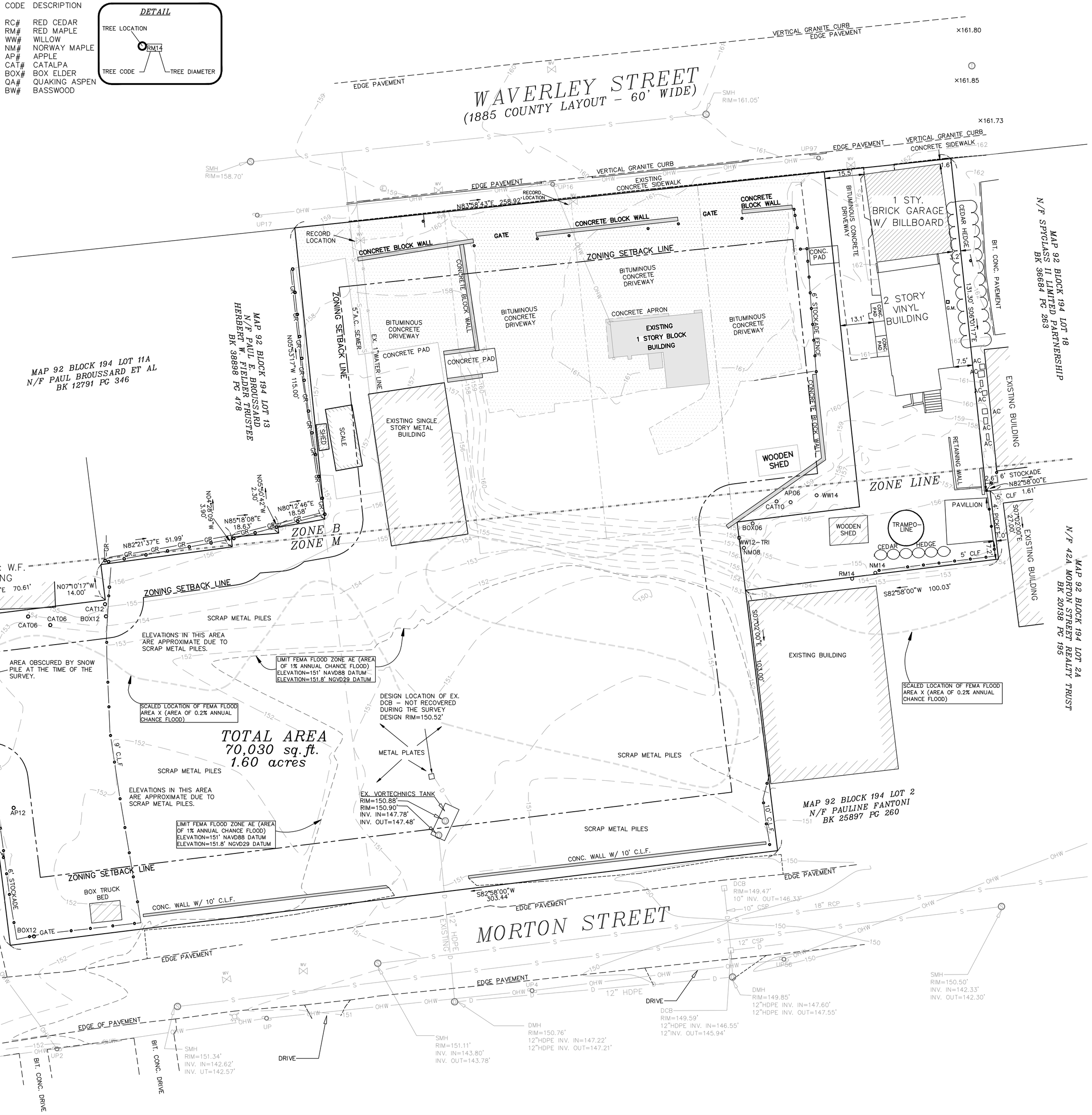

RESERVED FOR REGISTRY USE

FRAMINGHAM PLANNING BOARD
SITE PLAN REVIEW UNDER SECTION IV.2.D

DATE:

THE ENDORSEMENT OF THE PLANNING BOARD SHOULD NOT BE CONSTRUED TO BE A DETERMINATION OF CONFORMANCE WITH ZONING REGULATIONS.

NOTES:

1. SUBJECT PARCEL IS SHOWN AS ASSESSORS SHEET 92, BLOCK 194, LOTS 3, 5, AND 14.
   RECORD TITLE FROM BOOK 60629, PAGE 379, BOOK 63128, PAGE 51, AND BOOK 60629, PAGE 376, RESPECTIVELY.
2. THIS PLAN IS THE RESULT OF AN ON-GROUND SURVEY PERFORMED BY METROWEST ENGINEERING, INC. UTILITY LOCATIONS ARE BASED ON FIELD OBSERVATIONS, AVAILABLE RECORDS AND INFORMATION. METROWEST ENGINEERING, INC. DOES NOT WARRANT LOCATION, CHARACTER NOR ELEVATIONS OF ALL UNDERGROUND UTILITIES NOR THE LOCATION NOR CHARACTER OF SURFACE IMPROVEMENTS THE OBSERVATION OF WHICH WAS OBSCURED AT THE TIME OF THE SURVEY. THERE WAS 12"± OF SNOW COVER ON THE GROUND DURING THE SURVEY.
3. THE PROPERTY DESCRIBED ON THIS EXISTING CONDITIONS SURVEY, BUT NOT THE BUILDINGS THEREON, DOES LIE PARTIALLY WITHIN A SPECIAL FLOOD HAZARD AREA AS DEFINED BY THE FEDERAL EMERGENCY MANAGEMENT AGENCY; THE PROPERTY LIES WITHIN ZONES "X"(AREA OF 0.2% ANNUAL CHANCE FLOOD) & "AE" OF THE FLOOD INSURANCE RATE MAP IDENTIFIED AS COMMUNITY PANEL NO.25017C 0519E, BEARING AN EFFECTIVE DATE OF JUNE 4, 2010.

FOR METROWEST ENGINEERING, INC. DATE
ROBERT A. GEMMA, P.L.S. # 37046
P.E. # 31967 (CIVIL)

GRAPHIC SCALE
1 inch = 20 ft.
20 0 10 20 40 (FEET) 80
0 4 10 20 (METERS) 30

FRAMINGHAM SALVAGE CO.

EXISTING CONDITIONS PLAN
#120 WAVERLEY STREET
IN
FRAMINGHAM, MASS

PREPARED FOR:
APPLEBAUM REALTY COMPANY, LLC
120 WAVERLY STREET
FRAMINGHAM, MA 01702

PROPERTY OF:
APPLEBAUM REALTY COMPANY, LLC
120 WAVERLY STREET
FRAMINGHAM, MA 01702

ENGINEERS & SURVEYORS:
MWE
METROWEST ENGINEERING, INC.
75 FRANKLIN STREET
FRAMINGHAM, MA 01702
TELE.: (508)626-0063
EMAIL: INFO@MWENGINEERING.COM

SHEET 2 OF 8	DATE: JULY 14, 2014
CALC'D BY: PHA/AEH · FIELD BK: 610	CAD FILE: P_SITE_PLANS_MAA1.dwg
DRAFTER: MAA/BTN · PROJECT: FRM_WAV1	DWG FILE: SP071414.dwg

SP071414

EROSION CONTROL BARRIER

NOT TO SCALE

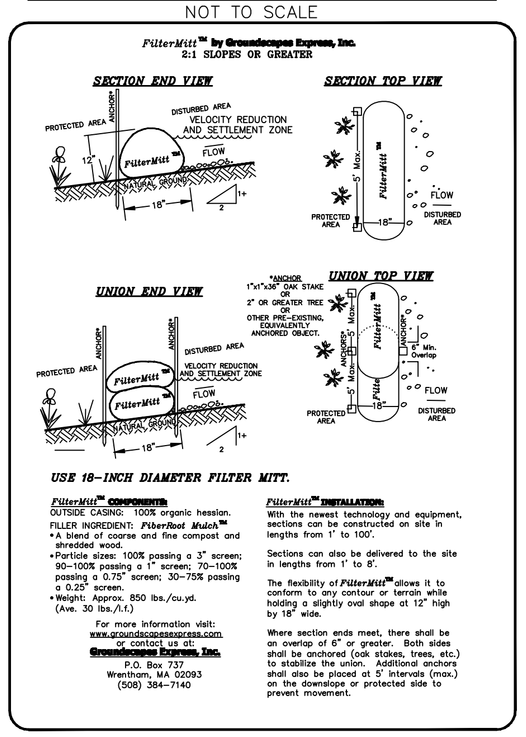

LEGEND

- BERM
- DRAIN CATCH BASIN
- DRAIN LINE
- DRAIN MANHOLE
- C.P. CONCRETE PAD
- FENCE
- CURB
- METAL FENCE POST
- HYDRANT
- MONITORING WELL
- PAVEMENT EDGE
- SEWER LINE
- SIGN
- SEWER MANHOLE
- TELEPHONE MANHOLE
- OHW OVERHEAD WIRE
- UTILITY POLE
- WATER GATE
- WATER LINE
- C.S. CONCRETE STEPS
- G.M. GAS METER
- SEWER LINE
- SEWER MANHOLE
- TELEPHONE MANHOLE
- VCC VERTICAL CONCRETE CURB
- # PARKING SPACES

TREE LEGEND

CODE	DESCRIPTION
RC#	RED CEDAR
RM#	RED MAPLE
WW#	WILLOW
NM#	NORWAY MAPLE
AP#	APPLE
CAT#	CATALPA
BOX#	BOX ELDER
QA#	QUAKING ASPEN
BW#	BASSWOOD

DETAIL: TREE LOCATION — RM14 — TREE CODE — TREE DIAMETER

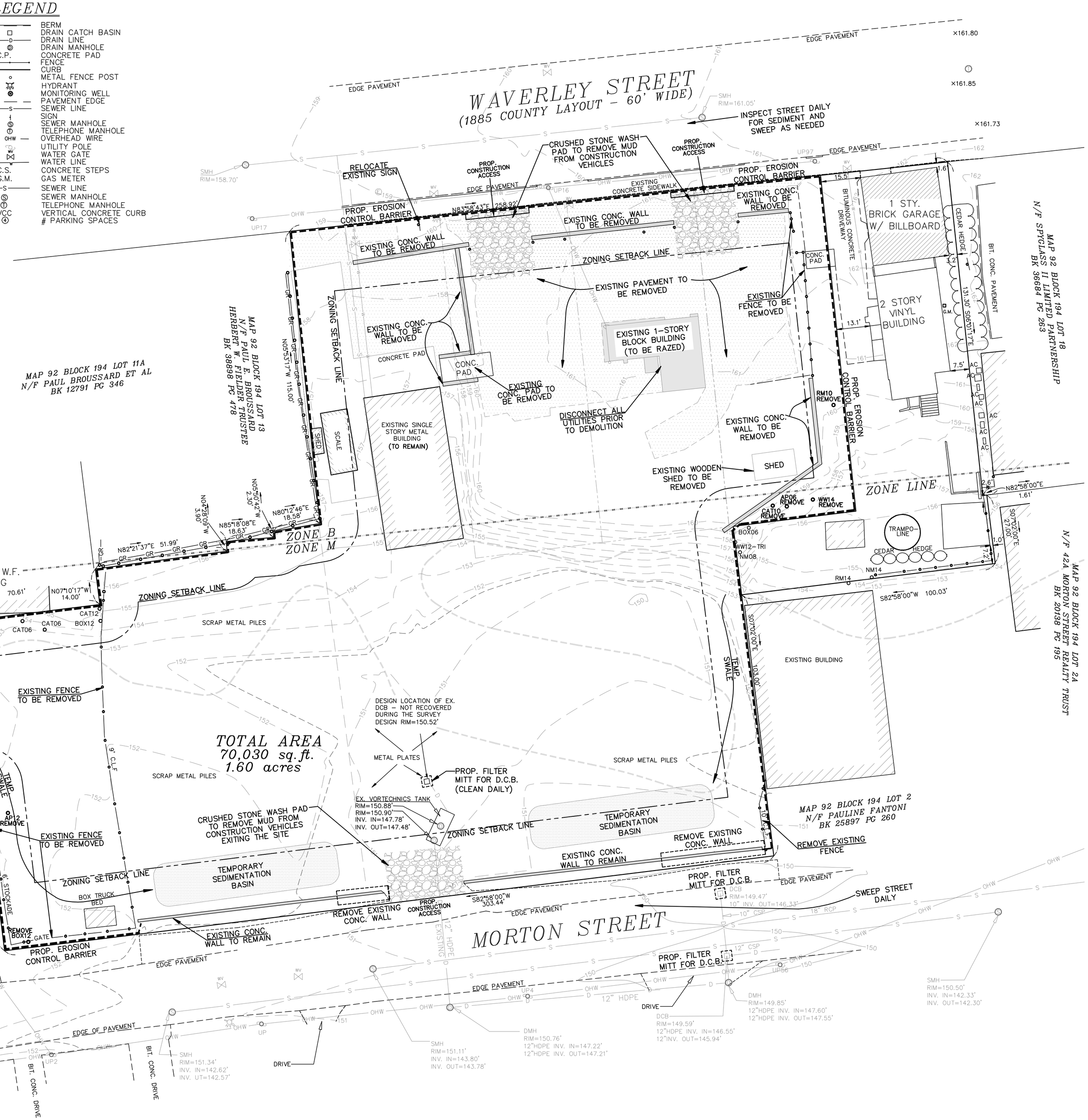

RESERVED FOR REGISTRY USE

FRAMINGHAM PLANNING BOARD
SITE PLAN REVIEW UNDER SECTION IV.2.D

DATE:

THE ENDORSEMENT OF THE PLANNING BOARD SHOULD NOT BE CONSTRUED TO BE A DETERMINATION OF CONFORMANCE WITH ZONING REGULATIONS.

FOR METROWEST ENGINEERING, INC. DATE
ROBERT A. GEMMA, P.L.S. # 37046
P.E. # 31967 (CIVIL)

GRAPHIC SCALE
1 inch = 20 ft.
20 0 10 20 40 (FEET) 80
0 4 10 20 (METERS) 30

FRAMINGHAM SALVAGE CO.

PROPOSED EROSION AND SEDIMENT CONTROL PLAN

#120 WAVERLEY STREET
IN
FRAMINGHAM, MASS

PREPARED FOR:
APPLEBAUM REALTY COMPANY, LLC
120 WAVERLY STREET
FRAMINGHAM, MA 01702

PROPERTY OF:
APPLEBAUM REALTY COMPANY, LLC
120 WAVERLY STREET
FRAMINGHAM, MA 01702

ENGINEERS & SURVEYORS:
MWE
METROWEST ENGINEERING, INC.
75 FRANKLIN STREET
FRAMINGHAM, MA 01702
TELE.: (508)626-0063
EMAIL: INFO@MWENGINEERING.COM

SHEET 3 OF 8		DATE: JULY 14, 2014
CALC'D BY: PHA/AEH	FIELD BK: 610	CAD FILE: P_SITE_PLANS_MAA1.dwg
DRAFTER: MAA/BTN	PROJECT: FRM_WAV1	DWG FILE: SP071414.dwg

PL 898 OF 1980

SP071414

ZONING TABLE
B ZONE (BUSINESS)

	RESIDENTIAL	NON-RESIDENTIAL
AREA	8,000 S.F.	6,000 S.F.
FRONTAGE	65 FEET	50 FEET
SETBACKS:		
FRONT YARD	30+ FEET	25 FEET
SIDE YARD	10 FEET	15 FEET
FLOOR AREA RATIO	–	0.32
BUILDING HEIGHT	40 FEET/3 STORIES	80 FEET/6 STORY
OPEN SPACE	30% MINIMUM	20%
LOT COVERAGE	35% MAXIMUM	–

ZONING TABLE
M ZONE (GENERAL MANUFACTURING)

	RESIDENTIAL	NON-RESIDENTIAL
AREA	8,000 S.F.	6,000 S.F.
FRONTAGE	65 FEET	50 FEET
SETBACKS:		
FRONT YARD	30+ FEET	25 FEET
SIDE YARD	10 FEET	15 FEET
FLOOR AREA RATIO	–	0.32
BUILDING HEIGHT	40 FEET/3 STORIES	80 FEET/6 STORY
OPEN SPACE	30% MINIMUM	20%
LOT COVERAGE	35% MAXIMUM	–

LEGEND

- BERM
- DRAIN CATCH BASIN
- DRAIN LINE
- DRAIN MANHOLE
- C.P. CONCRETE PAD
- FENCE
- CURB
- METAL FENCE POST
- HYDRANT
- MONITORING WELL
- PAVEMENT EDGE
- SEWER LINE
- SIGN
- SEWER MANHOLE
- TELEPHONE MANHOLE
- OHW OVERHEAD WIRE
- UTILITY POLE
- WATER GATE
- WATER LINE
- C.S. CONCRETE STEPS
- G.M. GAS METER
- SEWER LINE
- SEWER MANHOLE
- TELEPHONE MANHOLE
- VCC VERTICAL CONCRETE CURB
- # PARKING SPACES

TREE LEGEND

CODE	DESCRIPTION
RC#	RED CEDAR
RM#	RED MAPLE
WW#	WILLOW
NM#	NORWAY MAPLE
AP#	APPLE
CAT#	CATALPA
BOX#	BOX ELDER
QA#	QUAKING ASPEN
BW#	BASSWOOD

DETAIL: TREE LOCATION; RM14; TREE CODE; TREE DIAMETER

PL #898 OF 1980

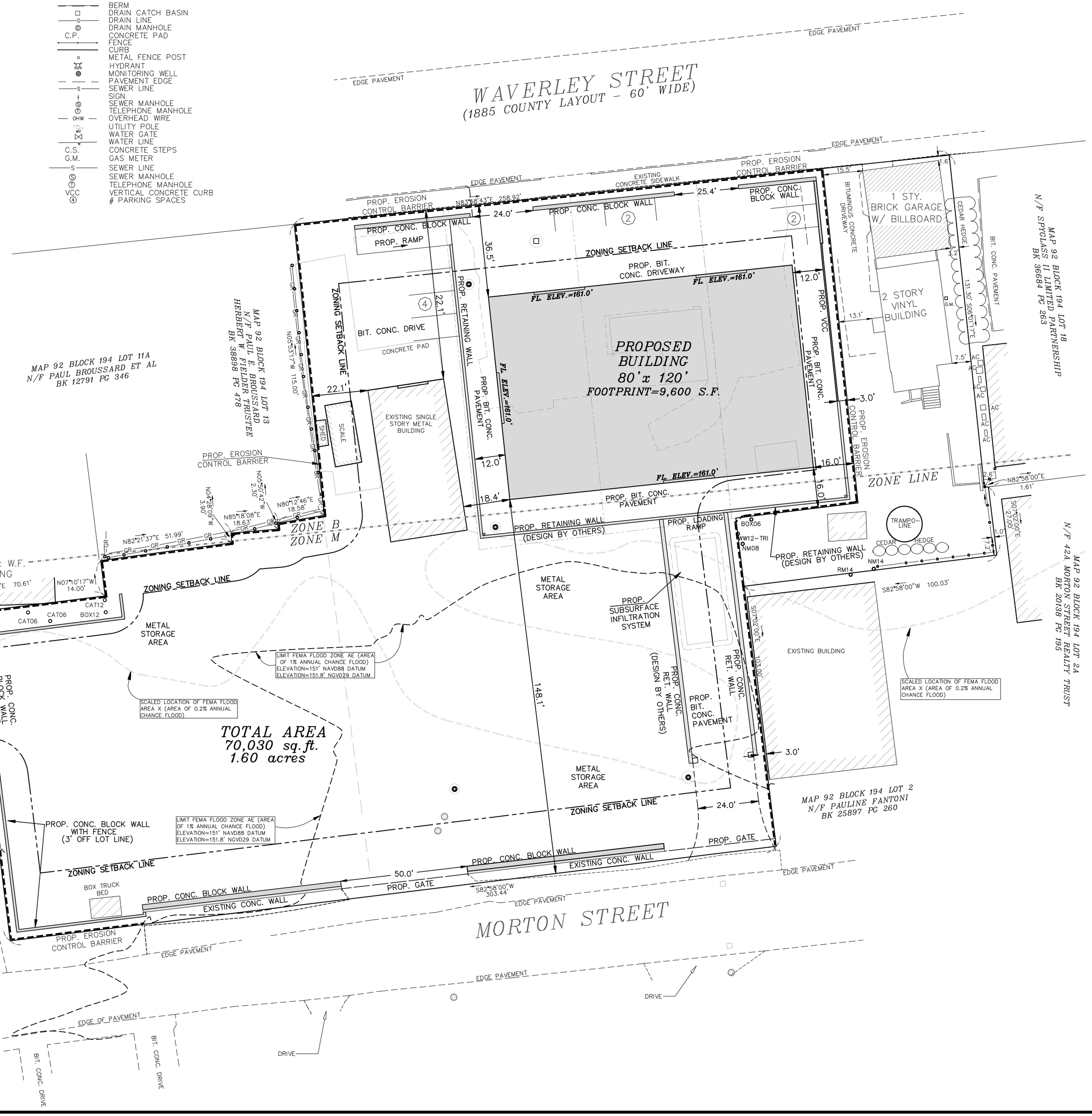

RESERVED FOR REGISTRY USE

FRAMINGHAM PLANNING BOARD
SITE PLAN REVIEW UNDER SECTION IV.2.D

DATE:

THE ENDORSEMENT OF THE PLANNING BOARD SHOULD NOT BE CONSTRUED TO BE A DETERMINATION OF CONFORMANCE WITH ZONING REGULATIONS.

NOTES:

1. SUBJECT PARCEL IS SHOWN AS ASSESSORS SHEET 92, BLOCK 194, LOTS 3, 5, AND 14.
RECORD TITLE FROM BOOK 60629, PAGE 379, BOOK 63128, PAGE 51, AND BOOK 60629, PAGE 376, RESPECTIVELY.

2. THIS PLAN IS THE RESULT OF AN ON-GROUND SURVEY PERFORMED BY METROWEST ENGINEERING, INC. UTILITY LOCATIONS ARE BASED ON FIELD OBSERVATIONS, AVAILABLE RECORDS AND INFORMATION. METROWEST ENGINEERING, INC. DOES NOT WARRANT LOCATION, CHARACTER NOR ELEVATIONS OF ALL UNDERGROUND UTILITIES NOR THE LOCATION NOR CHARACTER OF SURFACE IMPROVEMENTS THE OBSERVATION OF WHICH WAS OBSCURED AT THE TIME OF THE SURVEY. THERE WAS 12"± OF SNOW COVER ON THE GROUND DURING THE SURVEY.

3. THE PROPERTY DESCRIBED ON THIS EXISTING CONDITIONS SURVEY, BUT NOT THE BUILDINGS THEREON, DOES LIE PARTIALLY WITHIN A SPECIAL FLOOD HAZARD AREA AS DEFINED BY THE FEDERAL EMERGENCY MANAGEMENT AGENCY; THE PROPERTY LIES WITHIN ZONES "X"(AREA OF 0.2% ANNUAL CHANCE FLOOD) & "AE" OF THE FLOOD INSURANCE RATE MAP IDENTIFIED AS COMMUNITY PANEL NO.25017C 0519E, BEARING AN EFFECTIVE DATE OF JUNE 4, 2010.

FOR METROWEST ENGINEERING, INC. DATE
ROBERT A. GEMMA, P.L.S. # 37046
P.E. # 31967 (CIVIL)

GRAPHIC SCALE
1 inch = 20 ft.
20 0 10 20 40 (FEET) 80
0 4 10 20 (METERS) 30

FRAMINGHAM SALVAGE CO.

PROPOSED LAYOUT PLAN
#120 WAVERLEY STREET
IN
FRAMINGHAM, MASS

PREPARED FOR:
APPLEBAUM REALTY COMPANY, LLC
120 WAVERLY STREET
FRAMINGHAM, MA 01702

PROPERTY OF:
APPLEBAUM REALTY COMPANY, LLC
120 WAVERLY STREET
FRAMINGHAM, MA 01702

ENGINEERS & SURVEYORS:
MWE
METROWEST ENGINEERING, INC.
75 FRANKLIN STREET
FRAMINGHAM, MA 01702
TELE.: (508)626-0063
EMAIL: INFO@MWENGINEERING.COM

SHEET 4 OF 8		DATE: JULY 14, 2014
CALC'D BY: PHA/AEH	FIELD BK: 610	CAD FILE: P_SITE_PLANS_MAA1.dwg
DRAFTER: MAA/BTN	PROJECT: FRM_WAV1	DWG FILE: SP071414.dwg

SP071414

LEGEND

- BERM
- DRAIN CATCH BASIN
- DRAIN LINE
- DRAIN MANHOLE
- C.P. CONCRETE PAD
- FENCE
- CURB
- METAL FENCE POST
- HYDRANT
- MONITORING WELL
- PAVEMENT EDGE
- SEWER LINE
- SIGN
- SEWER MANHOLE
- TELEPHONE MANHOLE
- OHW OVERHEAD WIRE
- UTILITY POLE
- WATER GATE
- WATER LINE
- C.S. CONCRETE STEPS
- G.M. GAS METER
- SEWER LINE
- SEWER MANHOLE
- TELEPHONE MANHOLE
- VCC VERTICAL CONCRETE CURB
- # PARKING SPACES

ZONING TABLE
M ZONE (GENERAL MANUFACTURING)

	RESIDENTIAL	NON-RESIDENTIAL
AREA	8,000 S.F.	6,000 S.F.
FRONTAGE	65 FEET	50 FEET
SETBACKS:		
FRONT YARD	30+ FEET	25 FEET
SIDE YARD	10 FEET	15 FEET
FLOOR AREA RATIO	–	0.32
BUILDING HEIGHT	40 FEET/3 STORIES	80 FEET/6 STORY
OPEN SPACE	30% MINIMUM	20%
LOT COVERAGE	35% MAXIMUM	–

ZONING TABLE
B ZONE (BUSINESS)

	RESIDENTIAL	NON-RESIDENTIAL
AREA	8,000 S.F.	6,000 S.F.
FRONTAGE	65 FEET	50 FEET
SETBACKS:		
FRONT YARD	30+ FEET	25 FEET
SIDE YARD	10 FEET	15 FEET
FLOOR AREA RATIO	–	0.32
BUILDING HEIGHT	40 FEET/3 STORIES	80 FEET/6 STORY
OPEN SPACE	30% MINIMUM	20%
LOT COVERAGE	35% MAXIMUM	–

TREE LEGEND

CODE	DESCRIPTION
RC#	RED CEDAR
RM#	RED MAPLE
WW#	WILLOW
NW#	NORWAY MAPLE
AP#	APPLE
CAT#	CATALPA
BOX#	BOX ELDER
QA#	QUAKING ASPEN
BW#	BASSWOOD

DETAIL: TREE LOCATION, RM14, TREE CODE, TREE DIAMETER

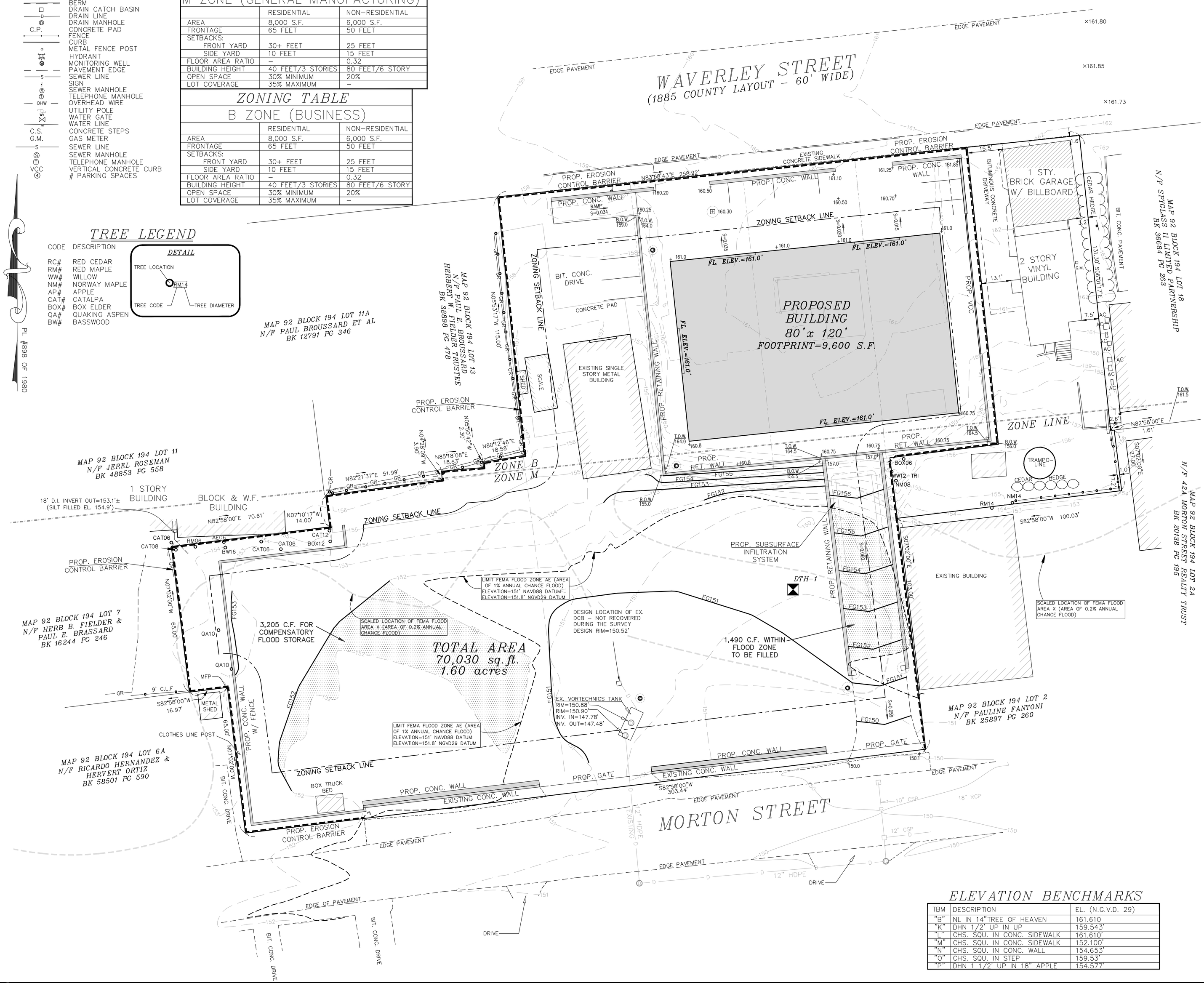

ELEVATION BENCHMARKS

TBM	DESCRIPTION	EL. (N.G.V.D. 29)
"B"	NL IN 14"TREE OF HEAVEN	161.610
"K"	DHN 1/2" UP IN UP	159.543'
"L"	CHS. SQU. IN CONC. SIDEWALK	161.610'
"M"	CHS. SQU. IN CONC. SIDEWALK	152.100'
"N"	CHS. SQU. IN CONC. WALL	154.653'
"O"	CHS. SQU. IN STEP	159.53'
"P"	DHN 1 1/2' UP IN 18" APPLE	154.577'

RESERVED FOR REGISTRY USE

FRAMINGHAM PLANNING BOARD
SITE PLAN REVIEW UNDER SECTION IV.2.D

DATE:

THE ENDORSEMENT OF THE PLANNING BOARD SHOULD NOT BE CONSTRUED TO BE A DETERMINATION OF CONFORMANCE WITH ZONING REGULATIONS.

NOTES:

1. SUBJECT PARCEL IS SHOWN AS ASSESSORS SHEET 92, BLOCK 194, LOTS 3, 5, AND 14.
   RECORD TITLE FROM BOOK 60629, PAGE 379, BOOK 63128, PAGE 51, AND BOOK 60629, PAGE 376, RESPECTIVELY.
2. THIS PLAN IS THE RESULT OF AN ON-GROUND SURVEY PERFORMED BY METROWEST ENGINEERING, INC. UTILITY LOCATIONS ARE BASED ON FIELD OBSERVATIONS, AVAILABLE RECORDS AND INFORMATION. METROWEST ENGINEERING, INC. DOES NOT WARRANT LOCATION, CHARACTER NOR ELEVATIONS OF ALL UNDERGROUND UTILITIES NOR THE LOCATION NOR CHARACTER OF SURFACE IMPROVEMENTS THE OBSERVATION OF WHICH WAS OBSCURED AT THE TIME OF THE SURVEY. THERE WAS 12"± OF SNOW COVER ON THE GROUND DURING THE SURVEY.
3. THE PROPERTY DESCRIBED ON THIS EXISTING CONDITIONS SURVEY, BUT NOT THE BUILDINGS THEREON, DOES LIE PARTIALLY WITHIN A SPECIAL FLOOD HAZARD AREA AS DEFINED BY THE FEDERAL EMERGENCY MANAGEMENT AGENCY; THE PROPERTY LIES WITHIN ZONES "X"(AREA OF 0.2% ANNUAL CHANCE FLOOD) & "AE" OF THE FLOOD INSURANCE RATE MAP IDENTIFIED AS COMMUNITY PANEL NO.25017C 0519E, BEARING AN EFFECTIVE DATE OF JUNE 4, 2010.

FOR METROWEST ENGINEERING, INC. DATE
ROBERT A. GEMMA, P.L.S. # 37046
P.E. # 31967 (CIVIL)

GRAPHIC SCALE
1 inch = 20 ft.
(FEET) 20 0 10 20 40 80
(METERS) 0 4 10 20 30

FRAMINGHAM SALVAGE CO.

PROPOSED GRADING PLAN
#120 WAVERLEY STREET
IN
FRAMINGHAM, MASS

PREPARED FOR:
APPLEBAUM REALTY COMPANY, LLC
120 WAVERLY STREET
FRAMINGHAM, MA 01702

PROPERTY OF:
APPLEBAUM REALTY COMPANY, LLC
120 WAVERLY STREET
FRAMINGHAM, MA 01702

ENGINEERS & SURVEYORS:
MWE
METROWEST ENGINEERING, INC.
75 FRANKLIN STREET
FRAMINGHAM, MA 01702
TELE.: (508)626-0063
EMAIL: INFO@MWENGINEERING.COM

SHEET 5 OF 8		DATE: JULY 14, 2014
CALC'D BY: PHA/AEH	FIELD BK: 610	CAD FILE: P_SITE_PLANS_MAA1.dwg
DRAFTER: MAA/BTN	PROJECT: FRM_WAV1	DWG FILE: SP071414.dwg

PL #898 OF 1980

SP071414

LEGEND

- BERM
- DRAIN CATCH BASIN
- DRAIN LINE
- DRAIN MANHOLE
- C.P. CONCRETE PAD
- FENCE
- CURB
- METAL FENCE POST
- HYDRANT
- MONITORING WELL
- PAVEMENT EDGE
- SEWER LINE
- SIGN
- SEWER MANHOLE
- TELEPHONE MANHOLE
- OHW OVERHEAD WIRE
- UTILITY POLE
- WATER GATE
- WATER LINE
- C.S. CONCRETE STEPS
- G.M. GAS METER
- SEWER LINE
- SEWER MANHOLE
- TELEPHONE MANHOLE
- VCC VERTICAL CONCRETE CURB
- # PARKING SPACES

PL #898 OF 1980

SOIL TEST RESULTS

SOIL LOGS No:

DTH-MWE 1 (ELEV=150.9')	
0"-36" FILL 36"-122" C1 SANDY LOAM 2.5Y 5/2 C1 HORIZON BORDERS ON SILT LOAM MOTTLING @40", 7.5YR 5/8 NO STANDING OR WEEPING WATER NO REFUSAL ESTIMATED HIGH WATER=147.6'	
DATE: JULY 1, 2014	
BY: BRIAN NELSON, SOIL EVALUATOR F.B. 606	
INSPECTOR: NO INSPECTOR	

ZONING TABLE
B ZONE (BUSINESS)

	RESIDENTIAL	NON-RESIDENTIAL
AREA	8,000 S.F.	6,000 S.F.
FRONTAGE	65 FEET	50 FEET
SETBACKS:		
FRONT YARD	30+ FEET	25 FEET
SIDE YARD	10 FEET	15 FEET
FLOOR AREA RATIO	–	0.32
BUILDING HEIGHT	40 FEET/3 STORIES	80 FEET/6 STORY
OPEN SPACE	30% MINIMUM	20%
LOT COVERAGE	35% MAXIMUM	–

ZONING TABLE
M ZONE (GENERAL MANUFACTURING)

	RESIDENTIAL	NON-RESIDENTIAL
AREA	8,000 S.F.	6,000 S.F.
FRONTAGE	65 FEET	50 FEET
SETBACKS:		
FRONT YARD	30+ FEET	25 FEET
SIDE YARD	10 FEET	15 FEET
FLOOR AREA RATIO	–	0.32
BUILDING HEIGHT	40 FEET/3 STORIES	80 FEET/6 STORY
OPEN SPACE	30% MINIMUM	20%
LOT COVERAGE	35% MAXIMUM	–

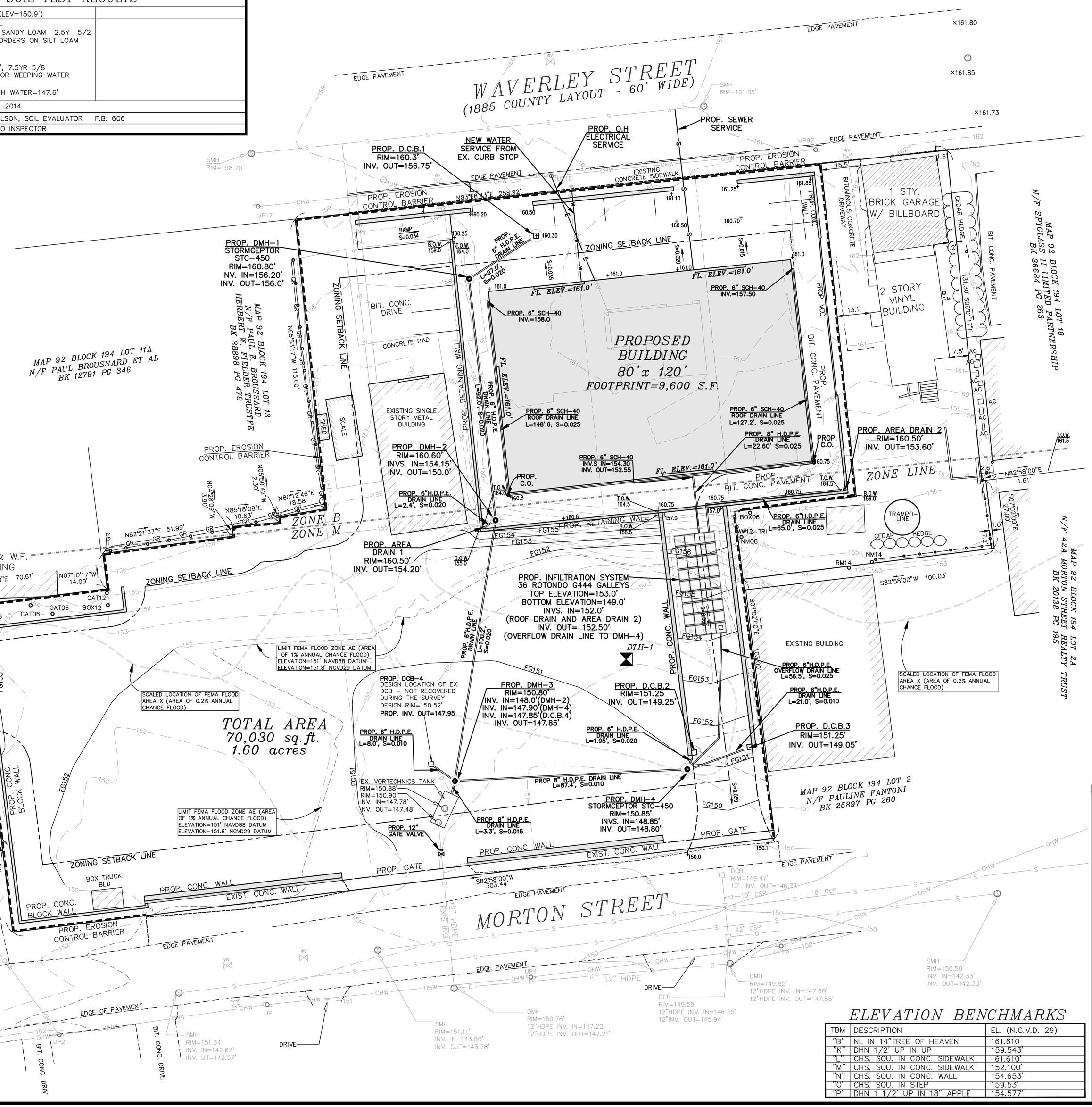

TREE LEGEND

CODE	DESCRIPTION
RC#	RED CEDAR
RM#	RED MAPLE
WW#	WILLOW
NM#	NORWAY MAPLE
AP#	APPLE
CAT#	CATALPA
BOX#	BOX ELDER
QA#	QUAKING ASPEN
BW#	BASSWOOD

DETAIL: TREE LOCATION, RM14, TREE CODE, TREE DIAMETER

ELEVATION BENCHMARKS

TBM	DESCRIPTION	EL. (N.G.V.D. 29)
"B"	NL IN 14"TREE OF HEAVEN	161.610
"K"	DHN 1/2" UP IN UP	159.543'
"L"	CHS. SQU. IN CONC. SIDEWALK	161.610'
"M"	CHS. SQU. IN CONC. SIDEWALK	152.100'
"N"	CHS. SQU. IN CONC. WALL	154.653'
"O"	CHS. SQU. IN STEP	159.53'
"P"	DHN 1 1/2" UP IN 18" APPLE	154.577'

RESERVED FOR REGISTRY USE

FRAMINGHAM PLANNING BOARD
SITE PLAN REVIEW UNDER SECTION IV.2.D

DATE:

THE ENDORSEMENT OF THE PLANNING BOARD SHOULD NOT BE CONSTRUED TO BE A DETERMINATION OF CONFORMANCE WITH ZONING REGULATIONS.

NOTES:

1. SUBJECT PARCEL IS SHOWN AS ASSESSORS SHEET 92, BLOCK 194, LOTS 3, 5, AND 14.
RECORD TITLE FROM BOOK 60629, PAGE 379, BOOK 63128, PAGE 51, AND BOOK 60629, PAGE 376, RESPECTIVELY.
2. THIS PLAN IS THE RESULT OF AN ON-GROUND SURVEY PERFORMED BY METROWEST ENGINEERING, INC. UTILITY LOCATIONS ARE BASED ON FIELD OBSERVATIONS, AVAILABLE RECORDS AND INFORMATION. METROWEST ENGINEERING, INC. DOES NOT WARRANT LOCATION, CHARACTER NOR ELEVATIONS OF ALL UNDERGROUND UTILITIES NOR THE LOCATION NOR CHARACTER OF SURFACE IMPROVEMENTS THE OBSERVATION OF WHICH WAS OBSCURED AT THE TIME OF THE SURVEY. THERE WAS 12"± OF SNOW COVER ON THE GROUND DURING THE SURVEY.
3. THE PROPERTY DESCRIBED ON THIS EXISTING CONDITIONS SURVEY, BUT NOT THE BUILDINGS THEREON, DOES LIE PARTIALLY WITHIN A SPECIAL FLOOD HAZARD AREA AS DEFINED BY THE FEDERAL EMERGENCY MANAGEMENT AGENCY; THE PROPERTY LIES WITHIN ZONES "X"(AREA OF 0.2% ANNUAL CHANCE FLOOD) & "AE" OF THE FLOOD INSURANCE RATE MAP IDENTIFIED AS COMMUNITY PANEL NO.25017C 0519E, BEARING AN EFFECTIVE DATE OF JUNE 4, 2010.

FOR METROWEST ENGINEERING, INC. DATE
ROBERT A. GEMMA, P.L.S. # 37046
P.E. # 31967 (CIVIL)

GRAPHIC SCALE
1 inch = 20 ft.
20 0 10 20 40 (FEET) 80
0 4 10 20 30 (METERS)

FRAMINGHAM SALVAGE CO.

PROPOSED SITE PLAN
#120 WAVERLEY STREET
IN
FRAMINGHAM, MASS

PREPARED FOR:
APPLEBAUM REALTY COMPANY, LLC
120 WAVERLY STREET
FRAMINGHAM, MA 01702

PROPERTY OF:
APPLEBAUM REALTY COMPANY, LLC
120 WAVERLY STREET
FRAMINGHAM, MA 01702

ENGINEERS & SURVEYORS:
MWE
METROWEST ENGINEERING, INC.
75 FRANKLIN STREET
FRAMINGHAM, MA 01702
TELE.: (508)626-0063
EMAIL: INFO@MWENGINEERING.COM

SHEET 6 OF 8		DATE: JULY 14, 2014
CALC'D BY: PHA/AEH	FIELD BK: 610	CAD FILE: P_SITE_PLANS_MAA1.dwg
DRAFTER: MAA/BTN	PROJECT: FRM_WAV1	DWG FILE: SP071414.dwg

SP071414

NOTES:

1. SUBJECT PARCEL IS SHOWN AS ASSESSORS SHEET 92, BLOCK 194, LOTS 3, 5 AND 14.
   RECORD TITLE FROM BOOK 60629, PAGE 379, BOOK 63128, PAGE 51, AND BOOK 60629, PAGE 376, RESPECTIVELY.
2. THIS PLAN IS THE RESULT OF AN ON-GROUND SURVEY PERFORMED BY METROWEST ENGINEERING, INC. UTILITY LOCATIONS ARE BASED ON FIELD OBSERVATIONS, AVAILABLE RECORDS AND INFORMATION. METROWEST ENGINEERING, INC. DOES NOT WARRANT LOCATION, CHARACTER NOR ELEVATIONS OF ALL UNDERGROUND UTILITIES NOR THE LOCATION NOR CHARACTER OF SURFACE IMPROVEMENTS THE OBSERVATION OF WHICH WAS OBSCURED AT THE TIME OF THE SURVEY. THERE WAS 12"± OF SNOW COVER ON THE GROUND DURING THE SURVEY.
3. THE PROPERTY DESCRIBED ON THIS EXISTING CONDITIONS SURVEY, BUT NOT THE BUILDINGS THEREON, DOES LIE PARTIALLY WITHIN A SPECIAL FLOOD HAZARD AREA AS DEFINED BY THE FEDERAL EMERGENCY MANAGEMENT AGENCY; THE PROPERTY LIES WITHIN ZONES "X"(AREA OF 0.2% ANNUAL CHANCE FLOOD) & "AE" OF THE FLOOD INSURANCE RATE MAP IDENTIFIED AS COMMUNITY PANEL NO.25017C 0519E, BEARING AN EFFECTIVE DATE OF JUNE 4, 2010.

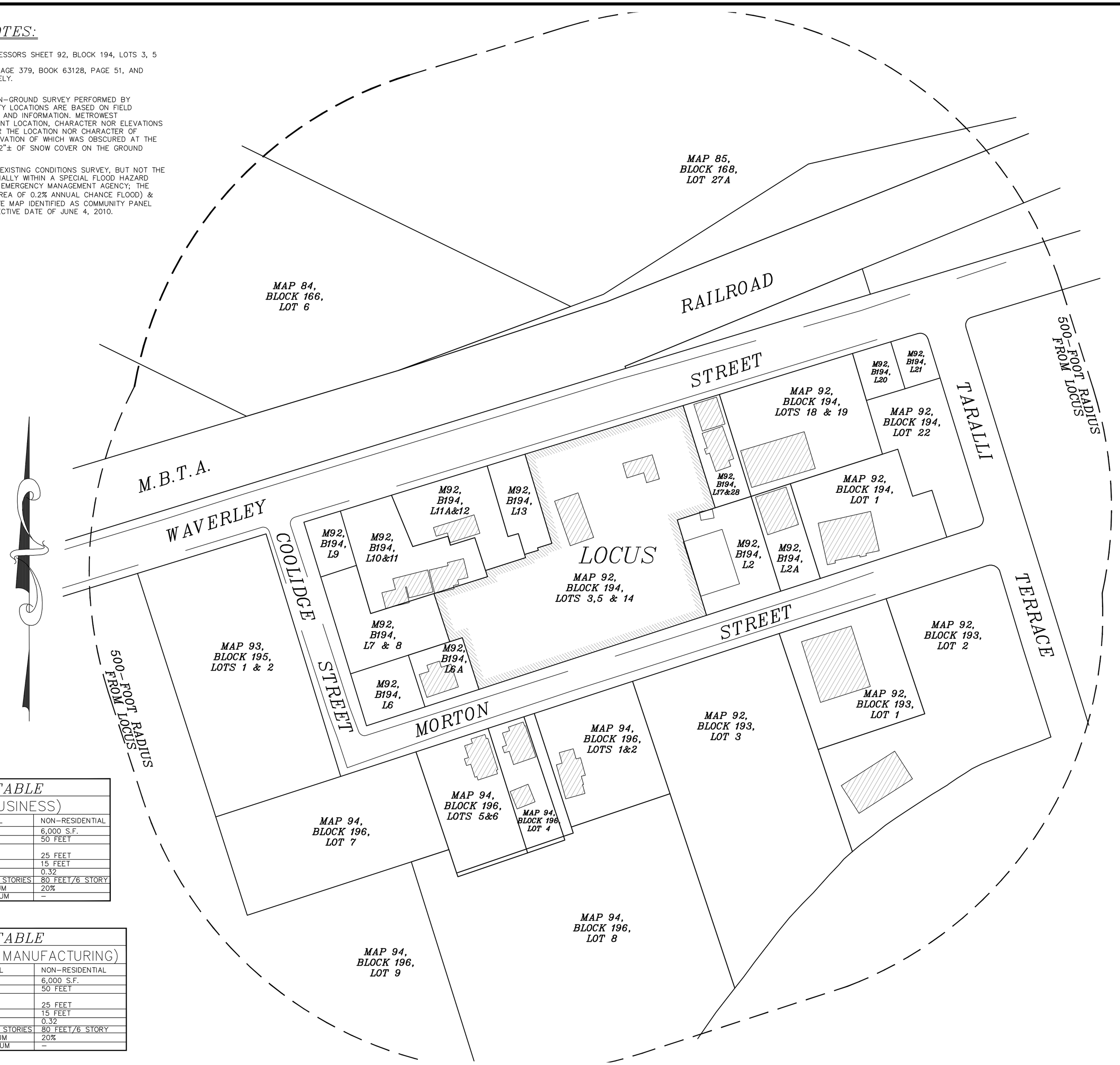

ZONING TABLE		
B ZONE (BUSINESS)		
	RESIDENTIAL	NON-RESIDENTIAL
AREA	8,000 S.F.	6,000 S.F.
FRONTAGE	65 FEET	50 FEET
SETBACKS:		
FRONT YARD	30+ FEET	25 FEET
SIDE YARD	10 FEET	15 FEET
FLOOR AREA RATIO	–	0.32
BUILDING HEIGHT	40 FEET/3 STORIES	80 FEET/6 STORY
OPEN SPACE	30% MINIMUM	20%
LOT COVERAGE	35% MAXIMUM	–

ZONING TABLE		
M ZONE (GENERAL MANUFACTURING)		
	RESIDENTIAL	NON-RESIDENTIAL
AREA	8,000 S.F.	6,000 S.F.
FRONTAGE	65 FEET	50 FEET
SETBACKS:		
FRONT YARD	30+ FEET	25 FEET
SIDE YARD	10 FEET	15 FEET
FLOOR AREA RATIO	–	0.32
BUILDING HEIGHT	40 FEET/3 STORIES	80 FEET/6 STORY
OPEN SPACE	30% MINIMUM	20%
LOT COVERAGE	35% MAXIMUM	–

RESERVED FOR REGISTRY USE

FRAMINGHAM PLANNING BOARD
SITE PLAN REVIEW UNDER SECTION IV.2.D

DATE:

THE ENDORSEMENT OF THE PLANNING BOARD SHOULD NOT BE CONSTRUED TO BE A DETERMINATION OF CONFORMANCE WITH ZONING REGULATIONS.

FOR METROWEST ENGINEERING, INC. DATE
ROBERT A. GEMMA, P.L.S. # 37046
P.E. # 31967 (CIVIL)

GRAPHIC SCALE
1 inch = 60 ft.
60 0 30 60 120 (FEET) 240
0 25 50 75 (METER)

FRAMINGHAM SALVAGE CO.

PROPOSED LOCUS MAP
#120 WAVERLEY STREET
IN
FRAMINGHAM, MASS

PREPARED FOR:
APPLEBAUM REALTY COMPANY, LLC
120 WAVERLY STREET
FRAMINGHAM, MA 01702

PROPERTY OF:
APPLEBAUM REALTY COMPANY, LLC
120 WAVERLY STREET
FRAMINGHAM, MA 01702

ENGINEERS & SURVEYORS:
MWE
METROWEST ENGINEERING, INC.
75 FRANKLIN STREET
FRAMINGHAM, MA 01702
TELE.: (508)626-0063
EMAIL: INFO@MWENGINEERING.COM

SHEET 7 OF 8		DATE: JULY 14, 2014
CALC'D BY: PHA/AEH	FIELD BK: 610	CAD FILE: P_SITE_PLANS_MAA1.dwg
DRAFTER: MAA/BTN	PROJECT: FRM_WAV1	DWG FILE: SP071414.dwg

SP071414

TRENCH DETAIL

NOT TO SCALE

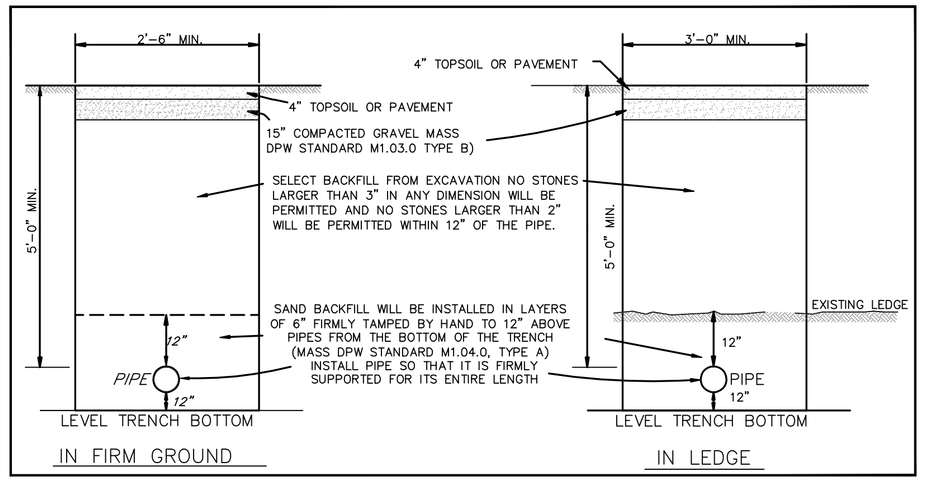

BITUMINOUS CONCRETE PAVEMENT

NOT TO SCALE

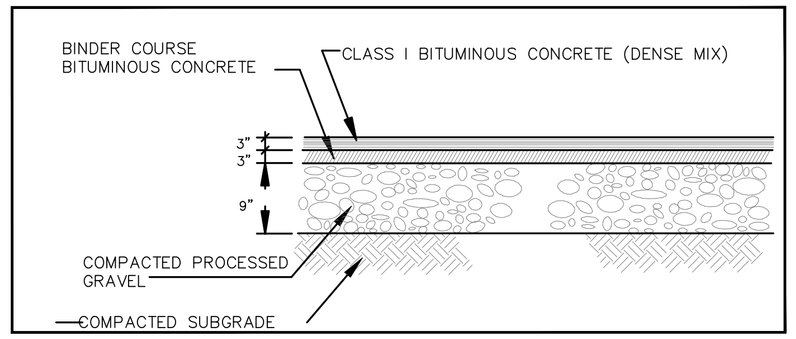

STORMCEPTOR TREATMENT SYSTEM

NOT TO SCALE

Rinker MATERIALS™ — Concrete Pipe Division

STC 450i Precast Concrete Stormceptor® (450 U.S. Gallon Capacity)

NOT TO SCALE

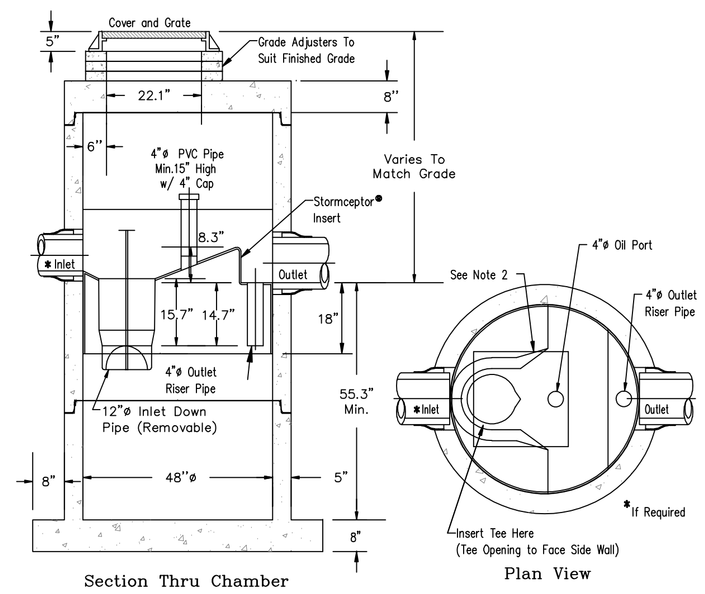

Notes:
1. The Use Of Flexible Connection is Recommended at The Inlet and Outlet Where Applicable.
2. The Cover Should be Positioned Over The Inlet Drop Pipe and The Oil Port.
3. The Stormceptor System is protected by one or more of the following U.S. Patents: #4985148, #5498331, #5725760, #5753115, #5849181, #6068765, #6371690.
4. Contact a Concrete Pipe Division representative for further details not listed on this drawing.

FRAMINGHAM PLANNING BOARD

SITE PLAN REVIEW UNDER SECTION IV.2.D

DATE:

THE ENDORSEMENT OF THE PLANNING BOARD SHOULD NOT BE CONSTRUED TO BE A DETERMINATION OF CONFORMANCE WITH ZONING REGULATIONS.

RESERVED FOR REGISTRY USE

PRECAST CONCRETE CATCH BASIN

NOT TO SCALE

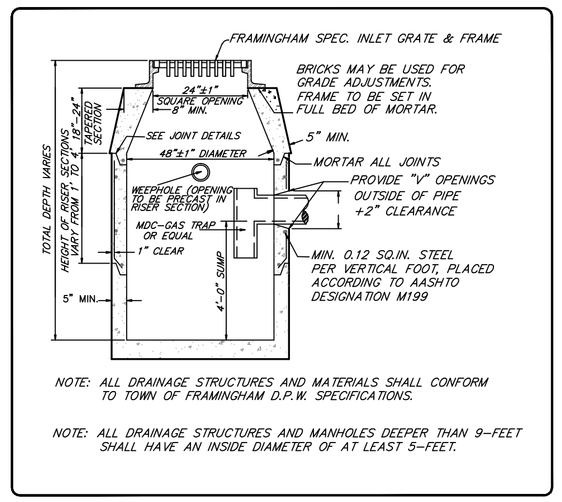

NOTE: ALL DRAINAGE STRUCTURES AND MATERIALS SHALL CONFORM TO TOWN OF FRAMINGHAM D.P.W. SPECIFICATIONS.

NOTE: ALL DRAINAGE STRUCTURES AND MANHOLES DEEPER THAN 9-FEET SHALL HAVE AN INSIDE DIAMETER OF AT LEAST 5-FEET.

DOUBLE GRATE CATCH BASIN TOP

NOT TO SCALE

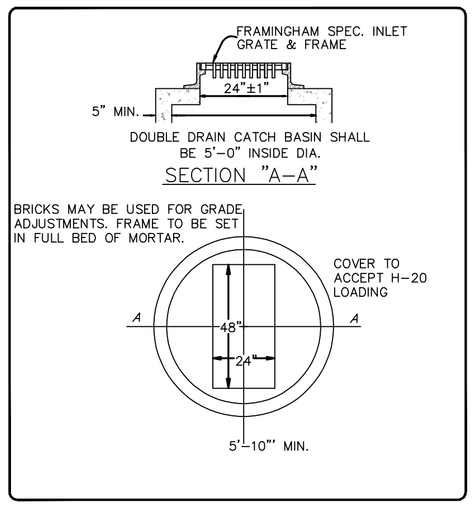

GATE VALVE DETAIL

NOT TO SCALE

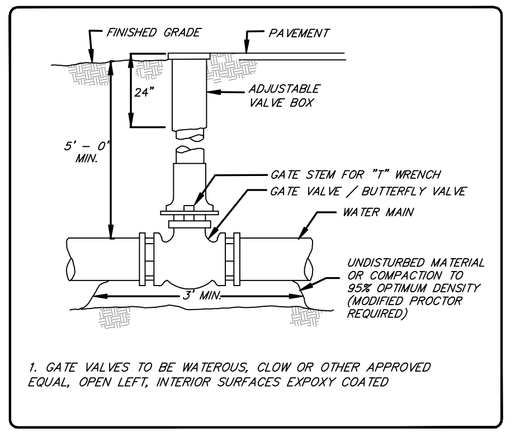

1. GATE VALVES TO BE WATEROUS, CLOW OR OTHER APPROVED EQUAL, OPEN LEFT, INTERIOR SURFACES EXPOXY COATED

TYPICAL WATER SERVICE CONNECTION

NOT TO SCALE

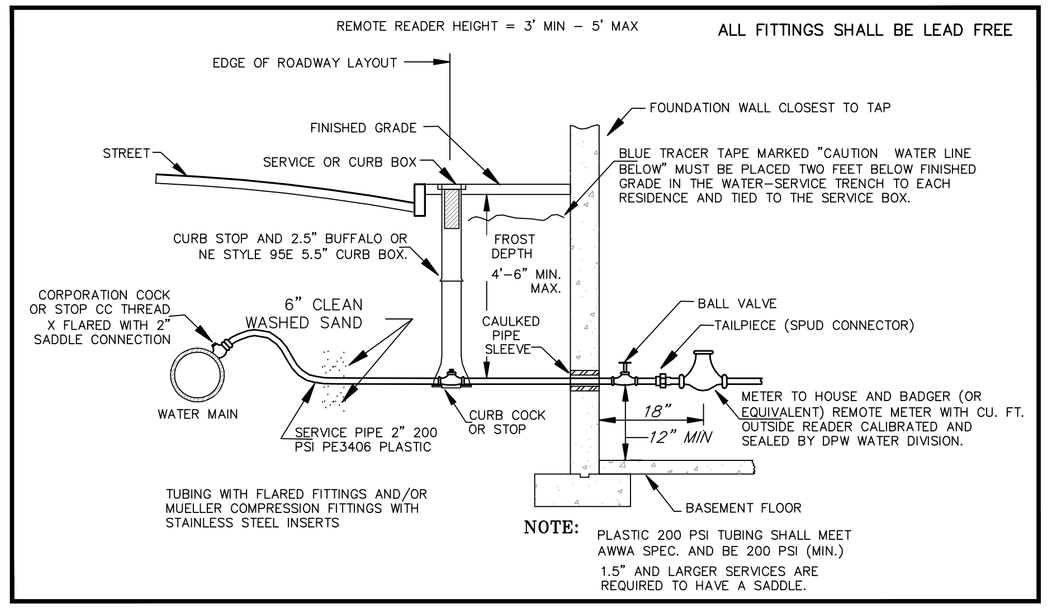

NOTE:
PLASTIC 200 PSI TUBING SHALL MEET AWWA SPEC. AND BE 200 PSI (MIN.)
1.5" AND LARGER SERVICES ARE REQUIRED TO HAVE A SADDLE.

VERTICAL GRANITE AND CONCRETE CURB

NOT TO SCALE

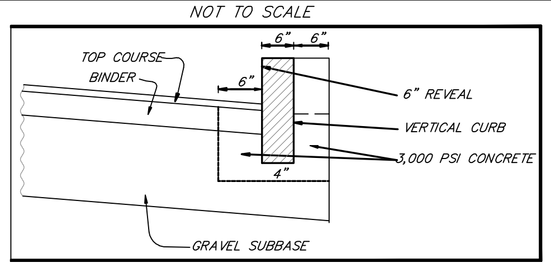

CONCRETE WALL WITH FENCE DETAIL

NOT TO SCALE

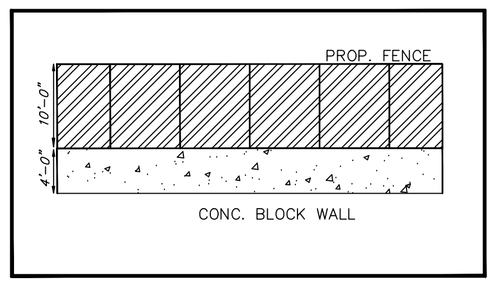

SQUARE CATCH BASIN FRAME & GRATE

NOT TO SCALE

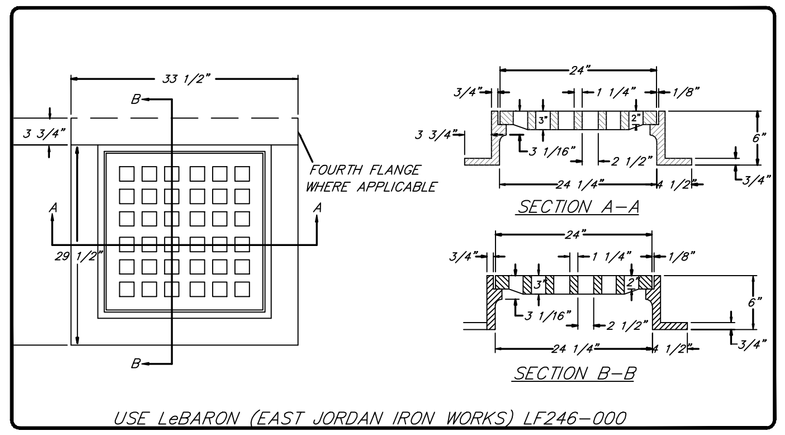

USE LeBARON (EAST JORDAN IRON WORKS) LF246-000

VORTECHNICS STORMWATER TREATMENT SYSTEM

NOT TO SCALE

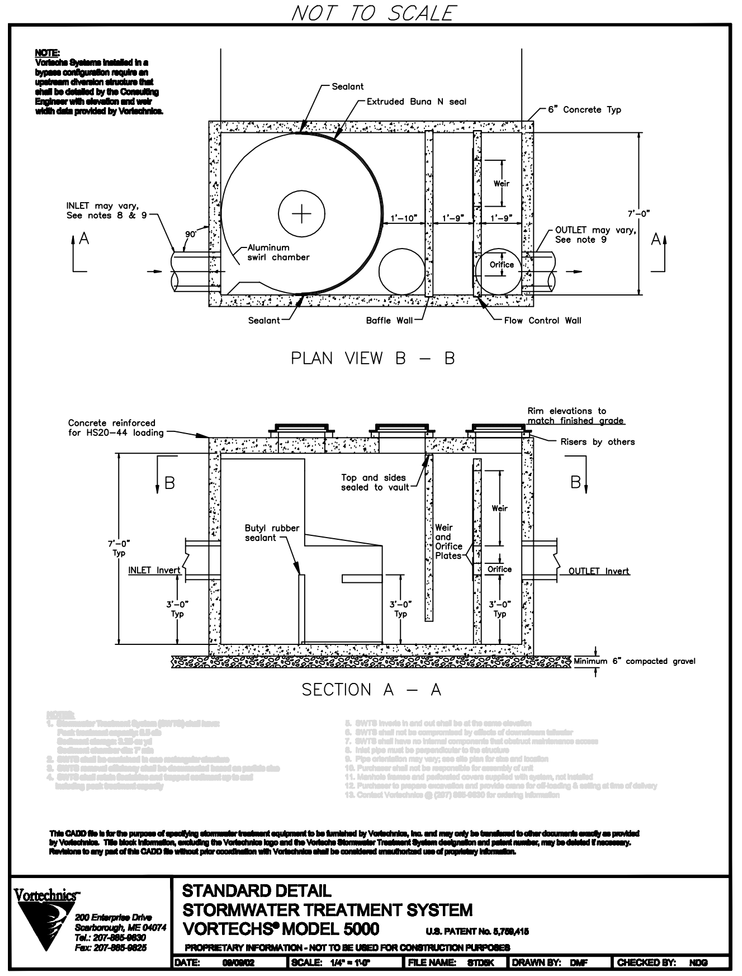

DRAINAGE INFILTRATION SYSTEM

NOT TO SCALE

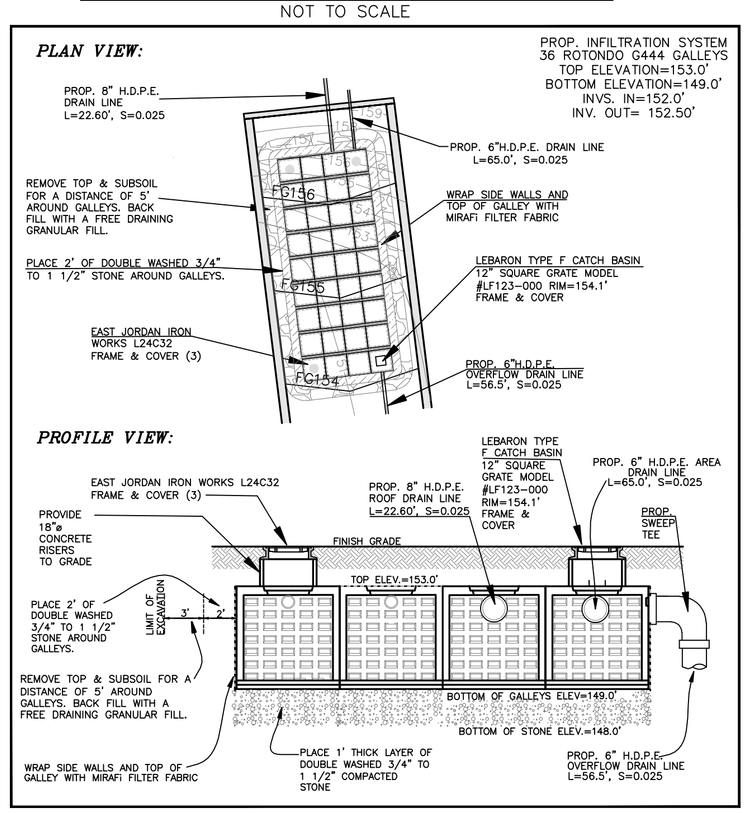

DRAINAGE INFILTRATION GALLEYS

NOT TO SCALE

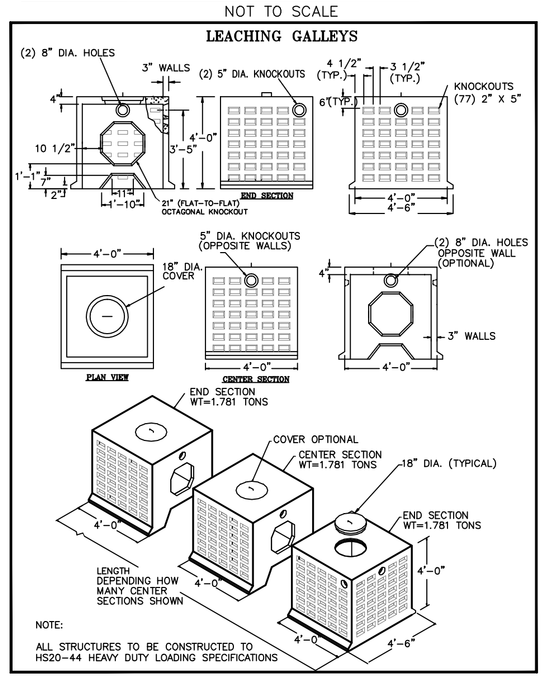

TYPICAL UTILITY TRENCH WITH FLOWABLE FILL

NOT TO SCALE

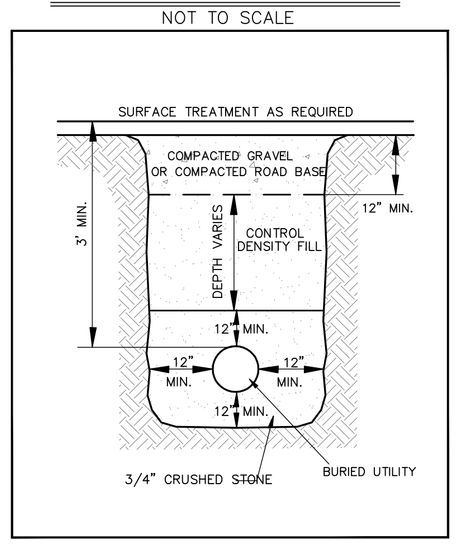

FOR METROWEST ENGINEERING, INC. *DATE*
ROBERT A. GEMMA, P.L.S. # 37046
P.E. # 31967 (CIVIL)

FRAMINGHAM SALVAGE CO.

PROPOSED DETAILS SHEET

#120 WAVERLEY STREET
IN
FRAMINGHAM, MASS

PREPARED FOR:
APPLEBAUM REALTY COMPANY, LLC
120 WAVERLY STREET
FRAMINGHAM, MA 01702

PROPERTY OF:
APPLEBAUM REALTY COMPANY, LLC
120 WAVERLY STREET
FRAMINGHAM, MA 01702

ENGINEERS & SURVEYORS:
MWE
METROWEST ENGINEERING, INC.
75 FRANKLIN STREET
FRAMINGHAM, MA 01702
TELE.: (508)626-0063
EMAIL: INFO@MWENGINEERING.COM

SHEET 8 OF 8		DATE: JULY 14, 2014
CALC'D BY: PHA/AEH	FIELD BK: 610	CAD FILE: P_SITE_PLANS_MAA1.dwg
DRAFTER: MAA/BTN	PROJECT: FRM_WAV1	DWG FILE: SP071414.dwg

SP071414