FRAMINGHAM

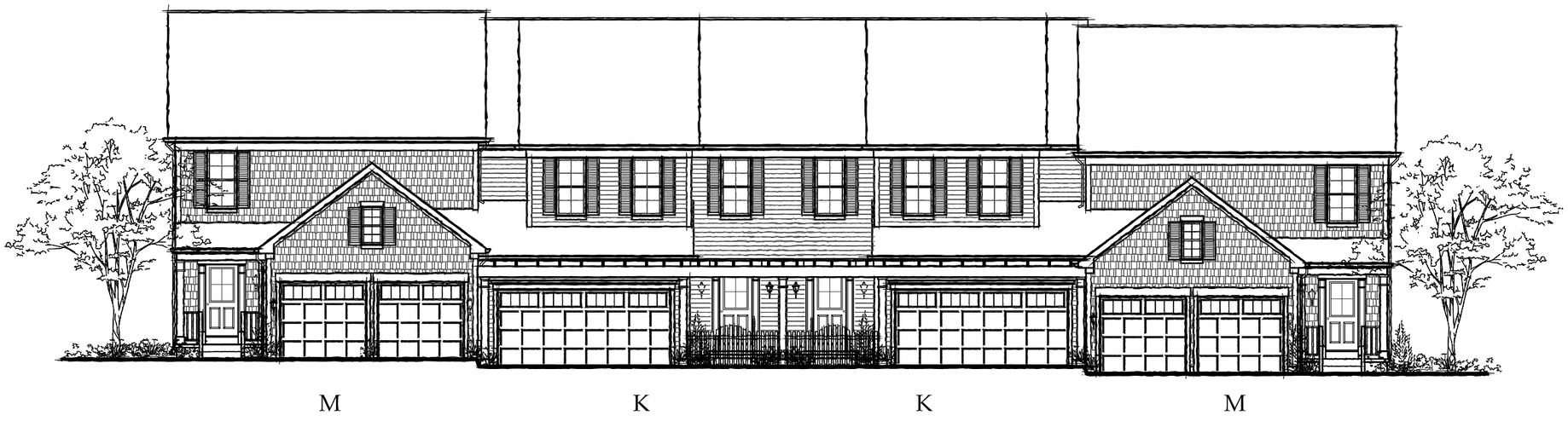

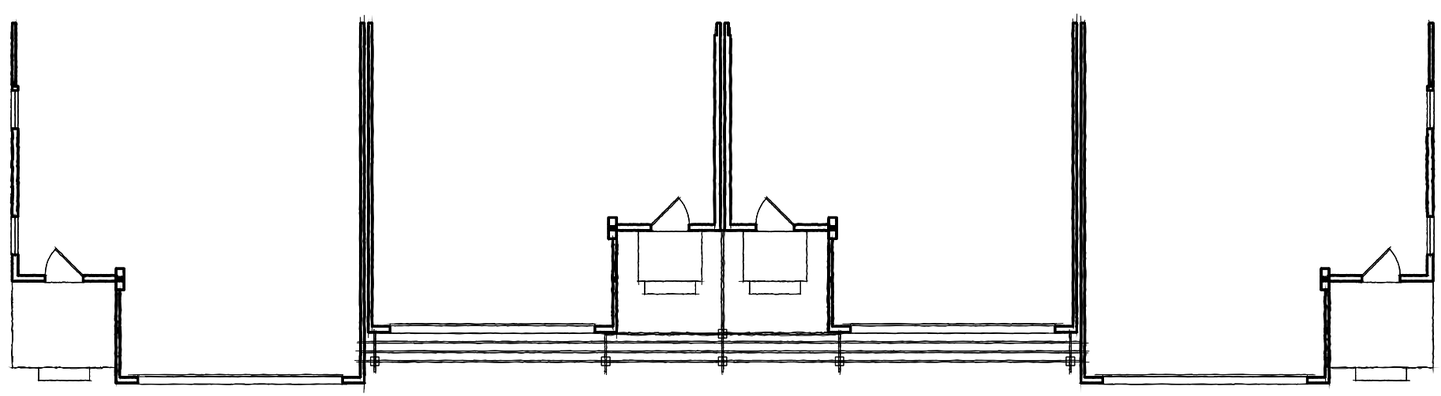

MARSHALL
ELEVATION #1

KM-2

DATE: 10/4/2006

COPYRIGHT © 2006 PULTE HOMES, INC.

FRAMINGHAM

M K K M

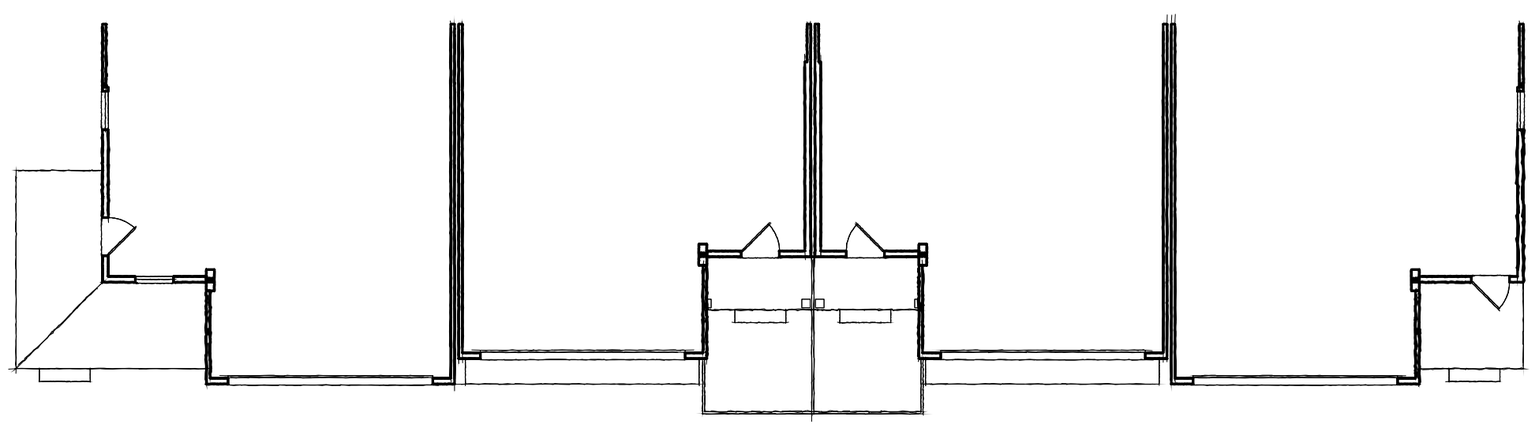

MARSHALL
ELEVATION #2

KM-3

DATE: 10/4/2006

COPYRIGHT © 2006 PULTE HOMES, INC.

FRAMINGHAM

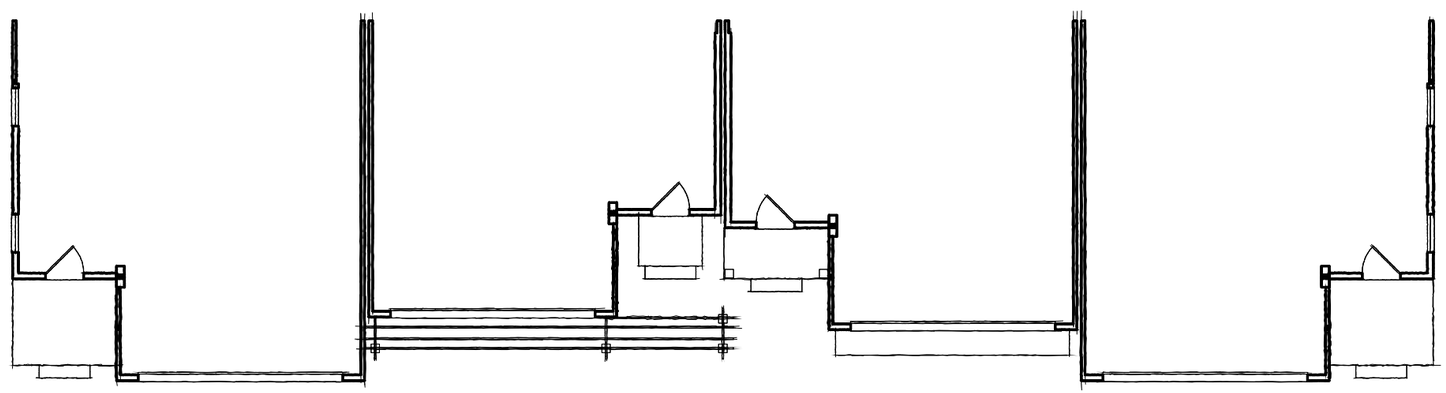

MARSHALL
ELEVATION #3

KM-4

DATE: 10/4/2006

COPYRIGHT © 2006 PULTE HOMES, INC.

FRAMINGHAM

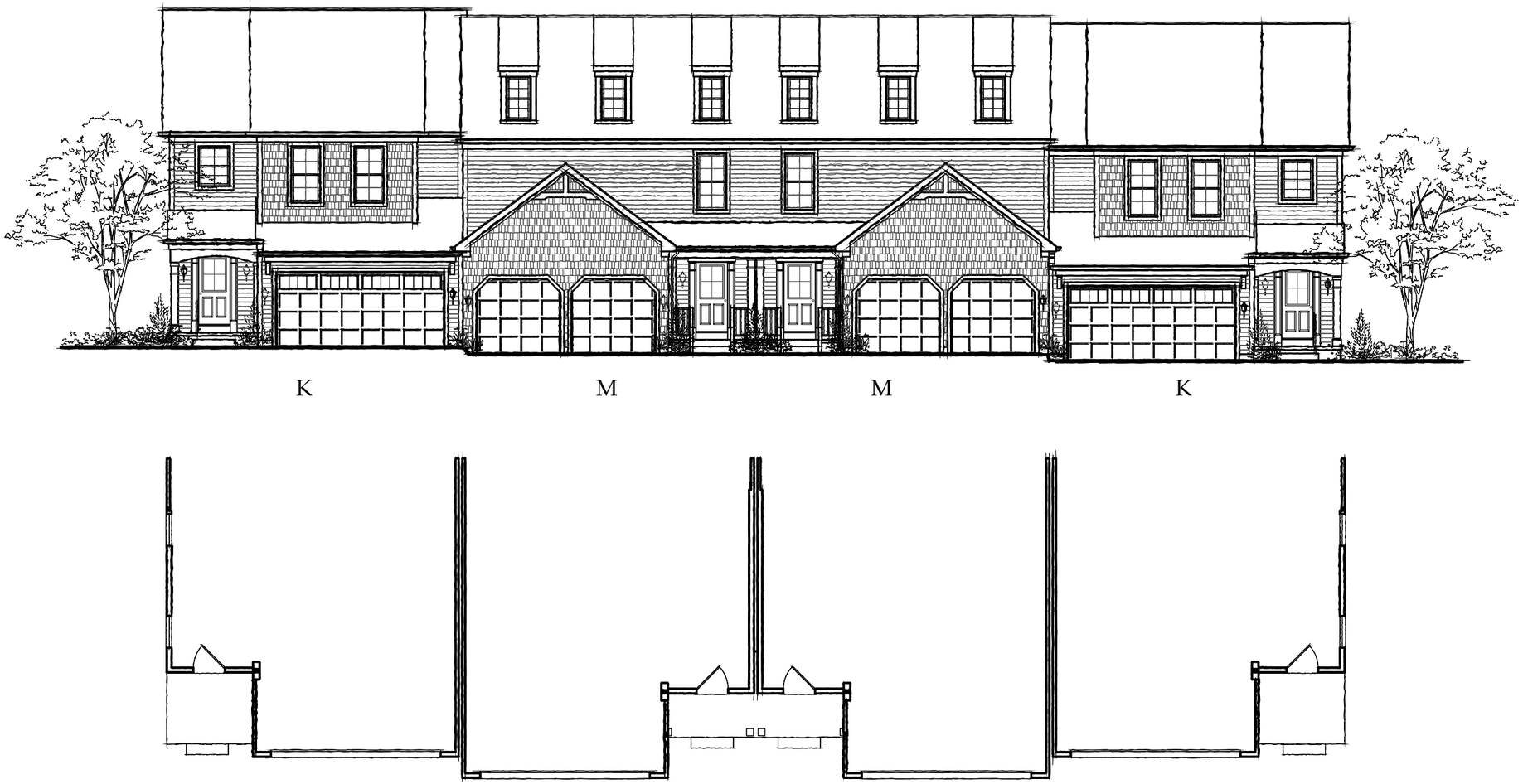

KIRKLAND
ELEVATION #1

KM-5

DATE: 10/4/2006

COPYRIGHT © 2006 PULTE HOMES, INC.

FRAMINGHAM

K M K M

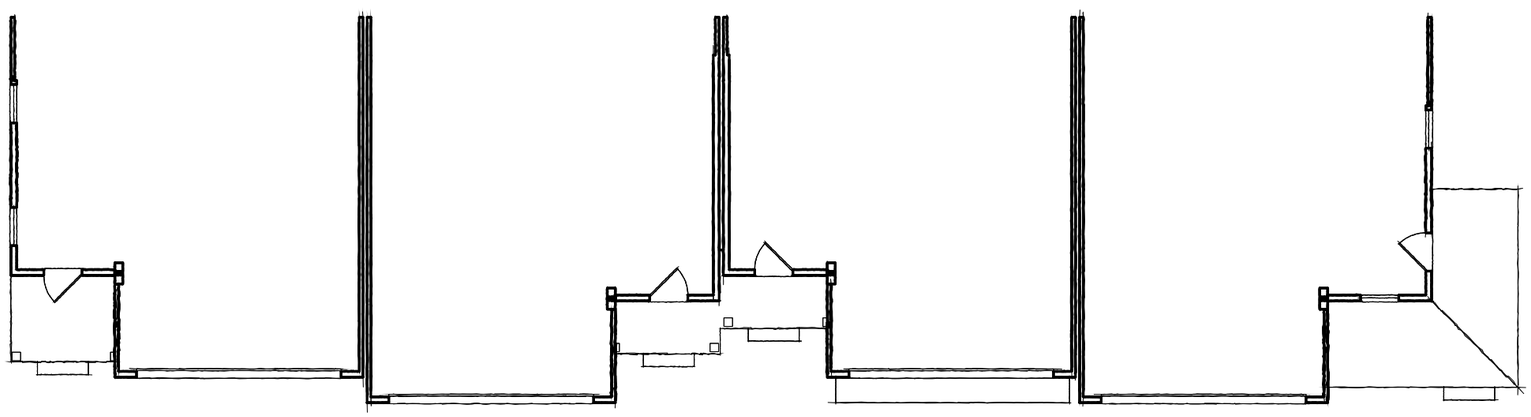

KIRKLAND
ELEVATION #2

KM-6

DATE: 10/4/2006

COPYRIGHT © 2006 PULTE HOMES, INC.

FRAMINGHAM

K M M K

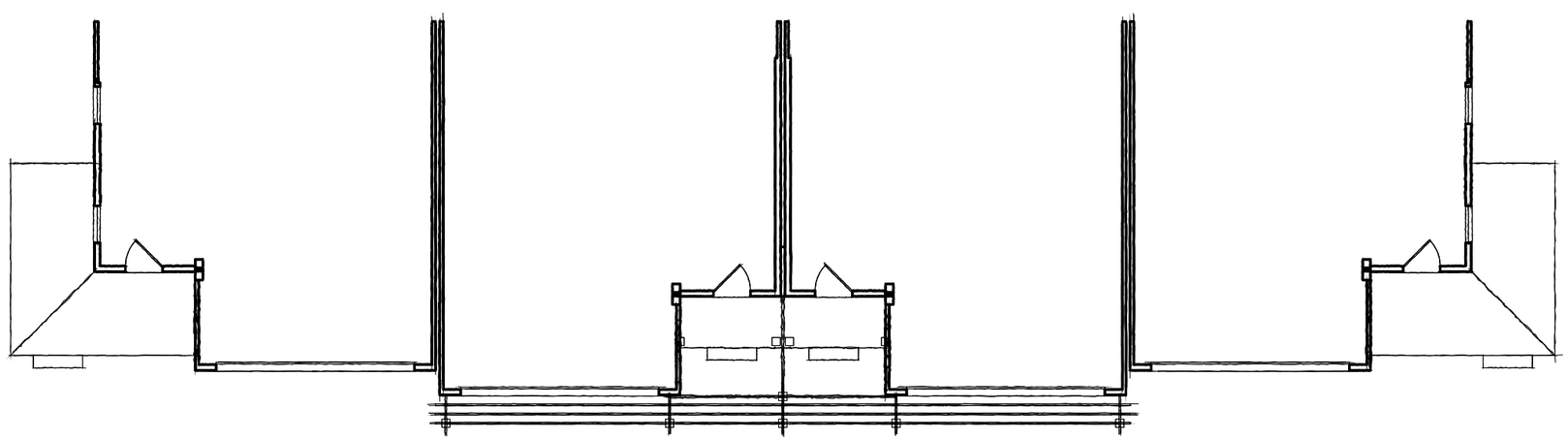

KIRKLAND
ELEVATION #3

KM–7

DATE: 10/4/2006

COPYRIGHT © 2006 PULTE HOMES, INC.

FRAMINGHAM

MARSHALL

KIRKLAND

MARSHALL

KIRKLAND

KIRKLAND - MARSHALL
SIDE ELEVATIONS

KM-8

DATE: 10/4/2006

COPYRIGHT © 2006 PULTE HOMES, INC.

FRAMINGHAM

M K K M

KIRKLAND - MARSHALL
REAR ELEVATIONS

KM-9

DATE: 10/4/2006

COPYRIGHT © 2006 PULTE HOMES, INC.