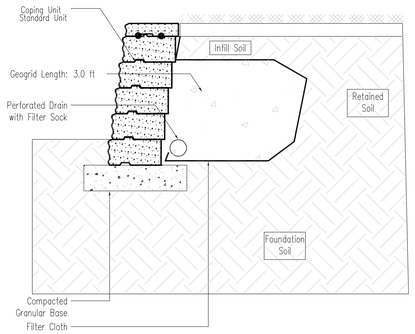

PRECAST CONCRETE BLOCK RETAINING WALL

SCALE: NOT TO SCALE

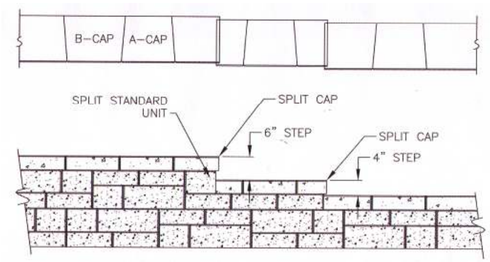

CAPPING DETAIL

SCALE: NOT TO SCALE

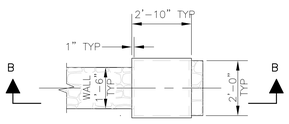

SECTION 'A'

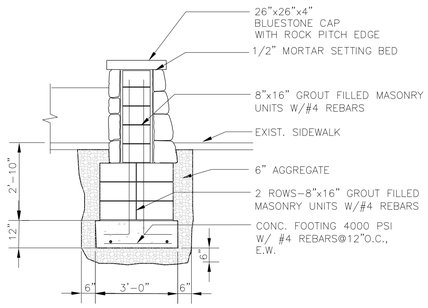

SECTION 'B'

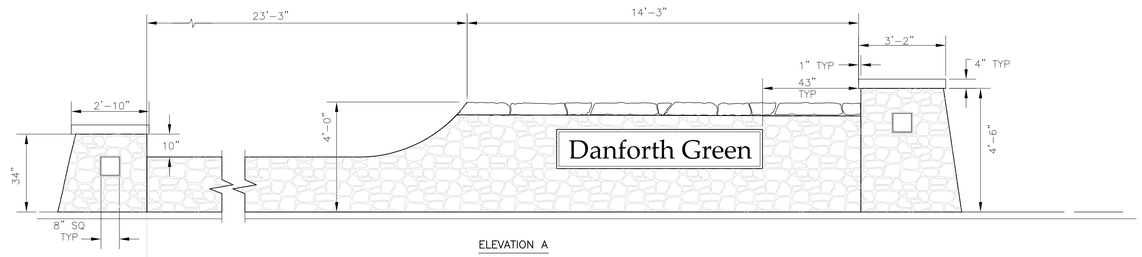

ELEVATION A

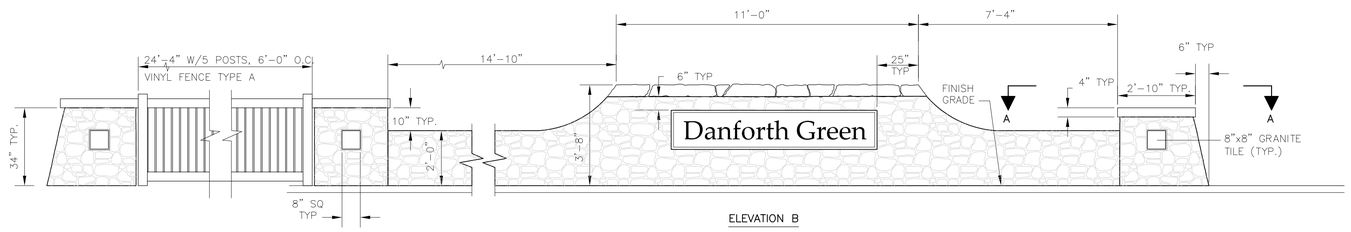

ELEVATION B

ENTRANCE SIGNS A & B

SCALE: NOT TO SCALE

GENERAL NOTES

No.	REVISIONS/SUBMISSIONS	Date

Landscape Architect

The **Waterfield Design** Group Inc.
50 Cross Street
Winchester, Massachusetts 01890

p. 781.756.0001
f. 781.756.0007

Civil Engineering

VHB
Vanasse Hangen Brustlin, Inc.
101 Walnut Street
Watertown, MA 02471
Tel. (617) 924-1770
Fax. (617) 924-2286

Client

Pulte Homes

Project

RIVER PATH ROADWAY IMPROVEMENT PLAN

FRAMINGHAM, MASSACHUSETTS

Stamp

Drawing Title

Landscape Details

Designed CMS	Project No. 1198	.DWG File Name Detail Sheet
Drawn JL	Scale AS NOTED	
Checked CMS	Drawing No.	
Reviewed DJD	L2.02	
Date 01.22.07		