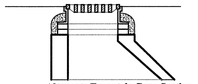

Alternate Eccentric Cone Section

Alternate Top Slab

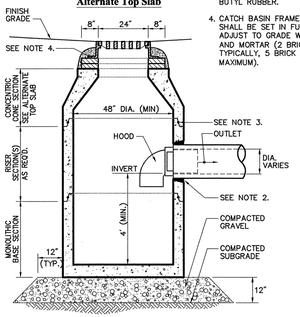

Notes:

1. ALL SECTIONS SHALL BE DESIGNED FOR HS-20 LOADING.
2. PROVIDE "V" KNOCKOUTS FOR PIPES WITH 2" MAX. CLEARANCE TO OUTSIDE OF PIPE. MORTAR ALL PIPE CONNECTIONS.
3. JOINT SEALANT BETWEEN PRECAST SECTIONS SHALL BE PREFORMED BUTYL RUBBER.
4. CATCH BASIN FRAME AND GRATE SHALL BE SET IN FULL MORTAR BED. ADJUST TO GRADE WITH CLAY BRICK AND MORTAR (2 BRICK COURSES TYPICALLY, 5 BRICK COURSES MAXIMUM).

Catch Basin (CB) With Hood

6/03

N.T.S. Source: VHB LD_101

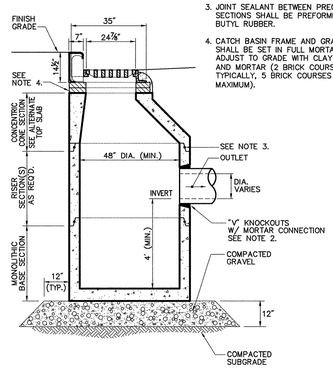

Notes:

1. ALL SECTIONS SHALL BE DESIGNED FOR HS-20 LOADING.
2. PROVIDE "V" KNOCKOUTS FOR PIPES WITH 2" MAX. CLEARANCE TO OUTSIDE OF PIPE. MORTAR ALL PIPE CONNECTIONS.
3. JOINT SEALANT BETWEEN PRECAST SECTIONS SHALL BE PREFORMED BUTYL RUBBER.
4. CATCH BASIN FRAME AND GRATE SHALL BE SET IN FULL MORTAR BED. ADJUST TO GRADE WITH CLAY BRICK AND MORTAR (2 BRICK COURSES TYPICALLY, 5 BRICK COURSES MAXIMUM).

Catch Basin With Curb Inlet (CBCI)

6/03

N.T.S. Source: VHB LD_110

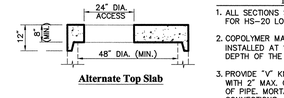

Alternate Top Slab

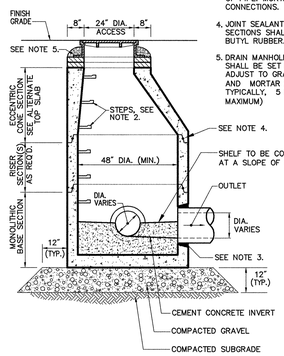

Notes:

1. ALL SECTIONS SHALL BE DESIGNED FOR HS-20 LOADING.
2. COPOLYMER MANHOLE STEPS SHALL BE INSTALLED AT 12" O.C. FOR THE FULL DEPTH OF THE STRUCTURE.
3. PROVIDE "V" KNOCKOUTS FOR PIPES WITH 2" MAX. CLEARANCE TO OUTSIDE OF PIPE. MORTAR ALL PIPE CONNECTIONS.
4. JOINT SEALANT BETWEEN PRECAST SECTIONS SHALL BE PREFORMED BUTYL RUBBER.
5. DRAIN MANHOLE FRAME AND COVER SHALL BE SET IN FULL MORTAR BED. ADJUST TO GRADE WITH CLAY BRICK AND MORTAR (2 BRICK COURSES TYPICALLY, 5 BRICK COURSES MAXIMUM)

Drain Manhole (DMH)

6/03

N.T.S. Source: VHB LD_115

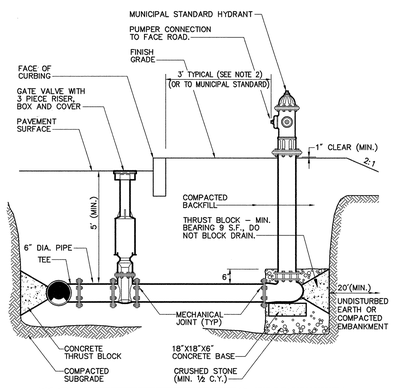

Notes:

1. CONCRETE THRUST BLOCKS TO BE USED ONLY WHERE THEY CAN BEAR ON UNDISTURBED EARTH AS SHOWN. USE CLAMPS AND TIE RODS OR OTHER ACCEPTABLE METHOD OF JOINT RESTRAINT WHERE SOIL CONDITIONS PROHIBIT THE USE OF THRUST BLOCKS.
2. HYDRANT IN SIDEWALK AREAS TO BE LOCATED TO PROVIDE MINIMUM CLEAR SIDEWALK PASSAGE WIDTH OF 3 FEET AT HYDRANT.

Hydrant Construction

3/06

N.T.S. Source: VHB LD_250

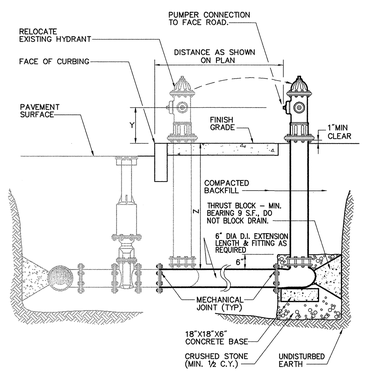

Notes:

1. CONCRETE THRUST BLOCKS TO BE USED ONLY WHERE THEY CAN BEAR ON UNDISTURBED EARTH. USE CLAMPS AND TIE RODS OR OTHER ACCEPTABLE METHOD OF JOINT RESTRAINT WHERE SOIL CONDITIONS PROHIBIT THE USE OF THRUST BLOCKS.
2. DIMENSIONS Y AND Z SHALL MEET MUNICIPAL REQUIREMENTS.

Hydrant Relocation Detail

6/03

N.T.S. Source: VHB LD_251

Table Of Dimensions

BENDS	B	C	D	E	F	BENDS	B	C	D	E	F
6" 11 1/4°	8"	15"	12"	24"	12"	6" 45°	8"	30"	12"	24"	14"
6" 22 1/2°	-	19"	-	-	13"	6" 90°	-	30"	-	-	27"
8" 11 1/4°	-	20"	-	-	12"	8" 45°	-	30"	-	-	24"
8" 22 1/2°	-	22"	-	-	17"	8" 90°	-	38"	-	-	36"
12" 11 1/4°	-	30"	-	-	15"	12" 45°	-	40"	-	-	40"
12" 22 1/2°	-	35"	-	-	25"	12" 90°	-	60"	-	-	52"

Bends

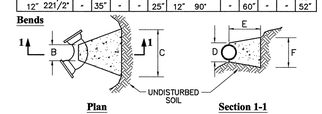

Plan Section 1-1

Table Of Dimensions

TEES	G	H	I	J	TEES	G	H	I	J
6"x 6"x 6"	12"	24"	24"	18"	12"x 12"x 6"	12"	24"	24"	18"
8"x 8"x 6"	-	-	-	-	12"x 12"x 8"	-	-	-	24"
8"x 8"x 8"	-	-	-	24"	12"x 12"x 12"	-	36"	-	36"

Tees

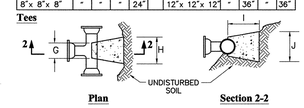

Plan Section 2-2

Notes:

1. PROVIDE BLOCKS FOR TAPPING SLEEVES, DEAD ENDS, GATE VALVES, AND VERTICAL BENDS (SAME SIZE AS REQUIRED FOR TEES). PROVIDE ANCHOR RODS AT VERTICAL BENDS AND GATE VALVES.
2. CONCRETE SHALL NOT BE PLACED AGAINST PIPE BEYOND FITTING.
3. CONCRETE SHALL BE 3000 PSI-TYPE I.

Concrete Thrust Block

6/03

N.T.S. Source: VHB LD_260

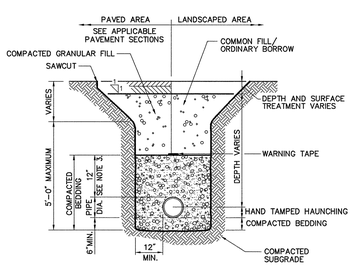

Notes:

1. WHERE UTILITY TRENCHES ARE CONSTRUCTED THROUGH DETENTION BASIN BERMS OR OTHER SUCH SPECIAL SECTIONS, PLACE TRENCH BACKFILL WITH MATERIALS SIMILAR TO THE SPECIAL SECTION REQUIREMENTS.
2. USE METALLIC TRACING/WARNING TAPE OVER ALL PIPES.
3. FOR HDPE PIPE, DIMENSION IS 24 INCHES.

Utility Trench

6/03

N.T.S. Source: VHB LD_300

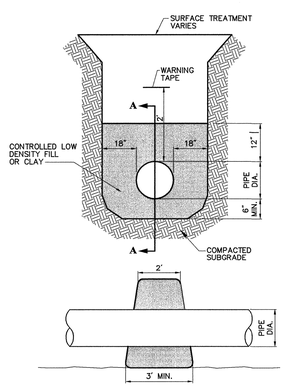

SECTION A-A

Notes:

ANTI-SEEPAGE COLLAR TO BE INSTALLED AT 100' MAX. SPACING ALONG ALL PIPING SYSTEMS.

Anti-Seepage Collar

6/03

N.T.S. Source: VHB LD_301

VHB

Vanasse Hangen Brustlin, Inc.

Transportation
Land Development
Environmental Services

101 Walnut Street, P.O. Box 9151
Watertown, Massachusetts 02471
617 924 1770 • FAX 617 924 2286

Owner:
RTM Framingham LLC
c/o Pulte Homes of New England
15 Flanders Road, Suite 170
Westborough, MA 01581
P: (508) 870-9999

Developer/Applicant/Subdivider:
Pulte Homes of New England
15 Flanders Road, Suite 170
Westborough, MA 01581
P: (508) 870-9999

Commonwealth of Massachusetts - MWRA
100 First Avenue
Boston, MA 02129

Surveyor:
Metrowest Engineering, Inc.
75 Franklin Street
Framingham, MA 01702
P: (508) 626-0063

Landscape Architect:
The Waterfield Design Group, Inc.
50 Cross Street
Winchester, MA 01890
P: (781) 756-0001
F: (781) 756-0007

No.	Revision	Date	Appvd.
1	General Revisions	01/25/07	

Designed by | Drawn by | Checked by
CAD checked by | Approved by
Scale N.T.S. | Date December 7, 2006

Project Title
Riverpath Drive
Roadway Improvements Plan

Framingham, Massachusetts
Issued for
Local Approvals

Not Approved for Construction
Drawing Title

Site Details 2

Drawing Number
C-7

Sheet 7 of 7

Project Number
09702.00